德克工業集團(瑞典)有限公司
DEREK INDUSTRY GROUP (SWEDEN) CO.,LTD.

寧波德克刀具有限公司
NINGBO DEREK TOOLS CO.,LTD.

營銷總部 SALES CENTER
地址: 浙江省寧波市莊市中官西路創E慧谷德克大樓
Add: DEREK Building, No. 777, Zhongguan Xi Rd, Ningbo, China 315201
電話/Tel: 0574-26286999 26287770/71/73/76/78/88
傳真/Fax: 0574-26283999 56708338
郵箱/E-mail: sales@derekmetal.com
網址/Web: www.derekmetal.com

國際貿易 OVERSEAS
電話/Tel: +86-574-26287772
郵箱/E-mail: sales1@derekmetal.com
網址/Web: www.derektools.com

江蘇分部 JIANGSU BRANCH
電話/Tel: 0512-57777308 57777309
傳真/Fax: 0512-82177166 57777309

廣東分部 GUANGDONG BRANCH
電話/Tel: 0769-81199996 85305802
傳真/Fax: 0769-81199995



我們保留技術更新、改善產品權利
We reserve the rights to update the products specification without prior notice.

DEREK 德克刀具

綜合樣本

2017-2018

DEREK



TOOLING SYSTEM

同德协力
攻无不克
Conquering all difficulties

ABOUT DEREK
德克簡介

寧波歐樂機械有限公司及德克刀具有限公司爲德克工業集團（瑞典）有限公司旗下在中國的制造加工企業及營銷中心，并在中國寧波設有占地 25 畝的一期工廠加工區及占地 30 畝的二期工廠加工區。

公司自 1993 年成立至今，20 多年專注于研發，是國內極少數擁有完整數控刀具現代化生産綫的制造企業，擁有 30 多項核心專利，多項國際認證，享譽海內外客户及業內同行！

Ningbo Oule Machine Co., Ltd., established in 1993, is the research and manufacturing center of Derek Tools and specialized in CNC milling cutters, turning tools, tool holders, and boring tools. Our mission is to provide high quality products and a-class service, including providing our customers with tools solution, helping them get smooth production.


工廠1
Factory I


工廠2
Factory II


工廠3
Factory III

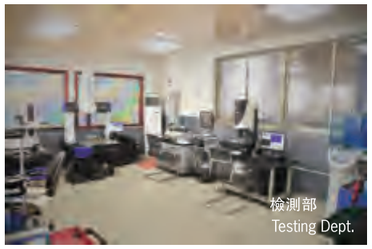
檢測部
Testing Dept.

德克刀具每款産品都承載着“制造一流産品、提供一流服務”企業宗旨，“爲客户提供數控刀具整體解决方案、助其更好的服務市場以獲得全球性的成功”是德克刀具的企業訴求 。

通過不斷技術革新，德克刀具客户遍布70多個國家和地區，建立了初步的全球營銷網絡！通過大量專業人才和先進的高科技生産檢測設備，在先進管理理念和國際質量體系的引導下，通過公司全體員工的智慧和不斷辛勤努力開發的德克刀具以其新穎的結構、精湛的工藝、優越的性能，德克刀具獲得了客户的一致好評和廣泛認同。

We work with the most experienced engineers in high precise tools area, and we have the testing equipments to make sure our tools are qualified. During the past years, we focused on the further development, working with high-tech research institutions all over the world. With our efforts, we won an award of patent of 0.002mm precision adjustmet for FBH micro boring tools. Meanwhile, we improved the whole factory management level. Today, Derek enjoys good reputation among the CNC tools field.





INDEX 目錄

A01-A24		精鏜刀 Micro boring
A25-A43		粗鏜刀 Rough boring
A44-A55		鏜頭組合 Head and holder
A56-A66		鏜頭刀柄 Boring holder
A67-A70		非標刀具 Customized tools
A71-A79		對刀儀及說明書 Tool presetter and manuals

鏜刀系列 **BORING TOOLS** A01-A79

B08-B20		HSK刀柄 HSK holder
B21-B45		BT刀柄 BT holder
B46-B65		SK刀柄 SK holder
B66		ISO刀柄 ISO holder
B67-B90		刀柄配件 Tool Holder accessories

加工中心刀柄 **TOOL HOLDERS** B01-B90

C01-C05		可換式銑刀頭 Screwed-on Milling Cutter
C06-C30		可轉位銑刀杆 Indexable Milling Cutter
C31-C33		倒角刀 Chamfering Cutter
C34-C43		可轉位面銑刀 Indexable Face Mill
C44		鋁合金面銑刀 Aluminum Face Mill
C45-C46		玉米銑刀 Shell Mill
C47-C50		三面刃側銑刀 Side Cutter

捨弃式切削刀具 **MILLING CUTTERS** C01-C50

D01-D33		外圓車刀 External turning tool
D34-D72		內孔車刀 Internal turning tool
D73-D74		螺紋車刀 Threading tool
D75-D92		切斷&切槽車刀 Grooving tool

車刀系列 **TURNING TOOLS** D01-D92

E01-E10		DP高性能通用加工立銑刀 DP For High Performance
E11-E31		DG通用加工立銑刀 DG For General Purpose
E32-E48		DH高硬度鋼加工立銑刀 DH For Harden Material
E49-E54		DL鋁加工立銑刀 DL For Aluminium
E55-E68		技術資料 Technical Data

整體鎢鋼硬質合金立銑刀 **CARBIDE END MILLS** E01-E68

F03-F07		鏜刀片 Boring Insert
F08-F11		銑刀片 Milling Insert
F12-F31		車刀片 Turning Insert
F32		切槽車刀片 Grooving Insert
F33-F41		螺紋車刀片 Threading Insert

刀片 **CARBIDE INSERTS** F01-F41

G01-G08		通用配件 General Accessories
G09-G11		車刀配件 Accessories For Turning Tools
G12-G14		附件 Accessories

周邊附件 **ACCESSORIES** G01-G14

H01-H20		技術資料 Technical Data

技術資料 **TECHNICAL DATA** H01-H20

FBH Micro-boring Tool
FBH極細微調精鏜刀

A02

FBH Micro Back-boring Tool
FBH極細微調精鏜反鏜刀

A02

FBH Micro-boring Body
FBH極細微調精鏜刀–精鏜刀本體

A02

FBH Micro-boring Bar
FBH精鏜刀杆

A03

Insert Holder For FBH Boring Tool
FBH精鏜刀片座

A03

DCK2-FBH25P Micro-finishing Boring Kit
DCK2-FBH25P極細微調精鏜孔系統

A04

DCK3-FBH32P Micro-finishing Boring Kit
DCK3-FBH32P極細微調精鏜孔系統

A04

DCK4-FBH40P Micro-finishing Boring Kit
DCK4-FBH40P極細微調精鏜孔系統

A05

DCK5-FBH50P Micro-finishing Boring Kit
DCK5-FBH50P極細微調精鏜孔系統

A06

DCK6-FBH63P Micro-finishing Boring Kit
DCK6-FBH63P極細微調精鏜孔系統

A07

DCK6-FBH80 Micro-finishing Boring Tool
DCK6-FBH80極細微調精鏜孔系統

A08

FBH Large Diameter Boring Tool
FBH大徑極細微調精鏜頭

A09

DSJ Boring Body,DSP Balance Weight
DSJ精鏜刀本體+DSP平衡座

A10

Insert Holder For FBH Boring Tool
FBH精鏜刀片座

A10

Insert Holder For FBH Back-boring Head
FBH精鏜反鏜刀片座

A10

CBH Finish Boring Tool
CBH微調精密鏜頭

A13

CBH Large Diameter Boring Tool For Finishing
CBH大徑微調精密鏜頭

A14

CBH-M Boring Tool For Pin Turning
CBH-M微調精密外徑鏜頭

A15

CBH-L Boring Tool For Pin Turning (Large Diameter)
CBH-L微調精密外徑鏜頭

A16

DYD Cartridge Boring Tool
DYD微調精密鏜頭

A17

Insert Holder For DYD Cartridge Boring Tool
DYD微調精密鏜頭微調器

A17

MKT Boring Cartridge
MKT微調精密鏜頭微調器

A19-A20

DBJ10/12/16 Micro-boring Head
DBJ10/12/16微調精密鏜頭

A21

DBJ10Micro-boring Bar
DBJ10微調鏜頭刀杆

A21

DBJ12Micro-boring Bar
DBJ12微調鏜頭刀杆

A21

DBJ16 Micro-boring Bar
DBJ16微調鏜頭刀杆

A22

DBJ Micro-boring Tool Kit
DBJ微調精鏜套裝組合

A22

DBJ Collet For Solid Carbide Boring Bar
DBJ鎢鋼刀杆專用筒夾

A23

DT Solid Carbide Boring Holder
DT抗振鎢鋼刀杆

A23

DEB Insert Holder
DEB拾弃式鏜頭

A23

NBH2084 Micro-boring Head
NBH2084微調精密鏜頭

A24

DBJ20 Micro-Boring Bar
DBJ20微調精密鏜頭刀杆

A24

NBH2084 Micro-Boring Tool Kit
NBH2084微調精鏜套裝組合

A24

ABH Twin-bit Rough Boring Body
ABH分體式粗鏜頭本體

A25

Inserts Holder For ABH Rough Boring Tool
ABH粗鏜頭刀座

A25

Inserts Holder For ABH Rough Back-boring Tool
ABH反鏜式粗鏜頭刀座

A25

ABH Rough Boring Tool
ABH分體式粗鏜頭

A26

ABH Rough Back-boring Tool
ABH反鏜式粗鏜頭

A26

DBH Rough Boring Tool
DBH分體式粗鏜頭

A27

Inserts Holder For DBH Rough Boring Tool
DBH粗鏜頭刀座

A27

DBH Large Diameter Rough Boring Tool
DBH大徑雙刃粗鏜頭

A28

BSA 45° Boring Holder With Square Boring Bit
BSA45度粗鏜孔刀柄

A29

BSB 90° Boring Holder With Square Boring Bit
BSB90度粗鏜孔刀柄

A30

TBS Square Boring Bit
TBS捨弃式鏜孔刀杆

A31

CBS Square Boring Bit
CBS捨弃式鏜孔刀杆

A32

Inserts Holder SFC For Roughing
SFC粗鏜刀座

A33

Inserts Holder SLC For Roughing
SLC粗鏜刀座

A33

Inserts Holder SSC For Roughing
SSC粗鏜刀座

A33

SB Twin-Bit Rough Boring Tool With Straight Shank
SB雙刃粗鏜刀杆

A34

MC Face Boring Head
MC固定式雙刃粗鏜頭

A35

KSD-W Indexable Insert Drill (3xD)
KSD-W捨弃式快速鑽頭（3倍長）

A36-A37

KSD-W Indexable Insert Drill (4xD)
KSD-W捨弃式快速鑽頭（4倍長）

A38-A39

KSD-S Indexable Insert Drill (3xD)
KSD-S捨弃式快速鑽頭（3倍長）

A40-A41

KSD-S Indexable Insert Drill (4xD)
KSD-S捨弃式快速鑽頭（4倍長）

A42-A43

HSK-FBH Micro-boring Tool
HSK-FBH微調精密鏜頭組件

A44

HSK-CBH Micro-boring Tool
HSK-CBH微調精密鏜頭組件

A45

HSK-ABH Rough Boring Tool
HSK-ABH粗鏜頭組件

A46

HSK-DBH Rough Boring Tool
HSK-DBH粗鏜頭組件

A47

BT-FBH Micro-boring Tool
BT-FBH微調精密鏜頭組件

A48

BT-CBH Micro-boring Tool
BT-CBH微調精密鏜頭組件

A49

BT-ABH Rough Boring Tool
BT-ABH粗鏜頭組件

A50

BT-DBH Rough Boring Tool
BT-DBH粗鏜頭組件

A51

SK-FBH Micro-boring Tool
SK-FBH微調精密鏜頭組件

A52

SK-CBH Micro-boring Tool
SK-CBH微調精密鏜頭組件

A53

SK-ABH Rough Boring Tool
SK-ABH粗鏜頭組件

A54

SK-DBH Rough Boring Tool
SK-DBH粗鏜頭組件

A55

HSK-DCK Boring Adapter
HSK-DCK鏜頭刀柄

A56-A57

BT-DCK Boring Adapter
BT-DCK鏜頭刀柄

A58-A59

SK-DCK Boring Adapter
SK-DCK鏜頭刀柄

A60-A61

BST Boring Adapter
BST鏜頭刀柄

A62

NBH2084 Boring Adapter
NBH2084鏜頭刀柄

A62

DSCK Carbide Boring Arbor
DSCK抗振鎢鋼鏜頭刀柄

A63

Adapter from DCK to ABS Type Connection
DCK-ABS接口轉換接柄

A63

DCK Extension
DCK等徑延長接柄

A64

DCK Reducer
DCK异徑轉換接柄（大接小）

A64

SCB Solid Carbide Boring Holder
SCB超硬整體碳化鎢鋼鏜刀杆

A65

SSB-32 Boring Holder
SSB-32直柄鏜刀杆

A65

CR Chamfering Cutter
CR倒角刀

A66

DCK Chamfering Head
DCK倒角刀頭

A66

Customized Tools
非標刀具

A67-A70

Tool Presetter
刀具設定儀

A71

Testing Bar
機床主軸跳動測試棒

A71

Adapter
變徑轉換套

A71

Manuals Of Boring Tools
説明書

A73-A79

HSK-A-DHP Hydraulic Chuck
HSK-A-DHP 液壓刀柄

B08-B09

HSK-A-DHP Super Slim Hydraulic Chuck
HSK-A-DHP 超細長液壓刀柄

B09

HSK-A-SF Shrink Fit Holder
HSK-A-SF燒結式熱裝刀柄（一體式）

B10-B11

HSK-A-DSF Shrink Fit Holder
HSK-A-DSF燒結式熱裝刀柄（分體式）

B12

HSK-A-DC Precision Slim Collet Chuck
HSK-A-DC小徑精密夾頭本體

B12

HSK-A-GSK High-speed Collet Chuck
HSK-A-GSK高速精密筒夾本體

B13

HSK-A-ER Spring Collet Chuck
HSK-A-ER彈性筒夾本體

B14-B15

HSK-A-VER Tapping Chuck
HSK-A-VER快換式微補償攻牙刀柄

B15

HSK-TPG Rigid Tapping Chuck
HSK-TPG剛性攻牙刀柄

B16

HSK-A-HPM High Speed Milling Chuck
HSK-A-HPM高速精密强力銑刀夾頭

B17

HSK-A-HPC High Speed Milling Chuck
HSK-A-HPC高速精密强力銑刀夾頭

B17

HSK-A-SLN Side-lock Holder
HSK-A-SLN側固式刀柄

B18

HSK-A-SLNB Side-lock Holder
HSK-A-SLNB側固式刀柄

B19

HSK-A-MTA Morse Taper Adapter
HSK-A-MTA莫式錐套刀柄（鑽頭套筒）

B19

HSK-A-SPU Drill Chuck Holder
HSK-A-SPU直結式鑽夾頭刀柄

B20

HSK-A-FMB Face Mill Holder
HSK-A-FMB平面銑刀柄

B20

BT-DHP Hydraulic Chuck
BT-DHP 液壓刀柄

B21-B22

BT-DHP Super Slim Hydraulic Chuck
BT-DHP 超細長液壓刀柄

B23

BT-SF Shrink Fit Holder
BT-SF燒結式熱裝刀柄（一體式）

B24-B26

BT-DSF Shrink Fit Holder
BT-DSF燒結式熱裝刀柄（分體式）

B26

BT-DC Precision Slim Collet Chuck
BT-DC小徑精密夾頭本體

B27

BT-GSK High Precision Chuck
BT-GSK高速精密筒夾本體

B28-B29

BT-DSK High Precision Chuck
BT-DSK高速精密筒夾本體

B29-B30

BT-ER Spring Collet Chuck
BT-ER彈性筒夾本體

B31-B32

BT- VER Tapping Chuck
BT- VER快換式微補償攻牙刀柄

B32

BT-TER Tapping Chuck
BT-TER伸縮攻牙器刀柄

B33

BT-TPG Rigid Tapping Chuck
BT-TPG剛性攻牙刀柄

B34

BT-TPM Tapping Chuck With High Rigidity
BT-TPM扭力伸縮攻牙刀柄

B34

BT-HPM High Speed Milling Chuck
BT-HPM高速精密强力銑刀夾頭

B35

BT-HPC High-speed Milling Chuck
BT-HPC高速精密强力銑刀夾頭

B36

BT-MLC Power Milling Chuck For Heavy Duty
BT-MLC强力筒夾本體

B37

BT-MLC Power Chuck Kit
BT-MLC强力筒夾本體套裝組

B37

BT-SLN Side-lock Holder
BT-SLN側固式刀柄

B38-B39

BT-MTA Morse Taper Holder
BT-MTA莫氏錐套刀柄（鑽頭套筒）

B40

BT-MTB Morse Taper Holder
BT-MTB莫氏錐套刀柄（螺絲鎖緊）

B41

BT-SPU Drill Chuck Holder
BT-SPU直結式鑽夾頭刀柄

B41

BT-FMA Face Mill Holder
BT-FMA平面銑刀柄（直柄式）

B42

BT-FMB Face Mill Holder
BT-FMB平面銑刀柄（直柄式）

B43

BT-FMA-BG Face Mill Holder With Extra Taper Shank
BT-FMA-BG平面銑刀柄（加長斜度柄）

B44

BT-FMB-BG Face Mill Holder With Extra Taper Shank
BT-FMB-BG平面銑刀柄（加長斜度柄）

B44

BT-SLO Oil-feed Holder
BT-SLO油路刀柄

B45

CSO Reducing Sleeve
CSO油路刀套

B45

PB Oil-feed Holder Positioning Block
PB油路止動塊

B45

SK-DHP Hydraulic Chuck
SK-DHP 液壓刀柄

B46-B47

SK-SF Shrink Fit Holder
SK-SF燒結式熱裝刀柄（一體式）



B48-B50

SK-DSF Shrink Fit Holder
SK-DSF燒結式熱裝刀柄（分體式）



B50

SK-DC Precision Slim Collet Chuck
SK-DC小徑精密夾頭本體



B51

SK-GSK High Speed Milling Holder
SK-GSK高速精密筒夾本體



B52-B53

SK-DSK High Speed Milling Holder
SK-DSK高速精密筒夾本體



B54-B55

SK-ER Spring Collet Chuck
SK-ER彈性筒夾本體



B56-B57

SK- VER Tapping Chuck
SK- VER快換式微補償攻牙刀柄



B57

SK-TER Tapping Chuck
SK-TER伸縮攻牙器刀柄



B58

SK-TPG Rigid Tapping Chuck
SK-TPG剛性攻牙刀柄



B59

SK-TPM Tapping Chuck With High Rigidity
SK-TPM扭力伸縮攻牙刀柄



B59

SK-HPM High Speed Milling Chuck
SK-HPM高速精密强力銑刀夾頭



B60

SK-HPC High Speed Milling Chuck
SK-HPC高速精密强力銑刀夾頭



B60

SK-MLC Power Milling Chuck
SK-MLC强力筒夾本體



B61

SK-MLC Power Chuck Kit
SK-MLC强力筒夾本體套裝組



B61

SK-SLN Side Lock Holder
SK-SLN側固式刀柄



B62

SK-MTA Morse Taper Holder
SK-MTA莫氏錐套刀柄（鑽頭套筒）



B63

SK-MTB Morse Taper Holder
SK-MTB莫氏錐套刀柄（螺絲鎖緊）



B63

SK-SPU Drill Chuck Holder
SK-SPU直結式鑽夾頭刀柄



B64

SK-FMB Face Milling Holder
SK-FMB平面銑刀柄



B64

SK-SLO Oil-feed Holder
SK-SLO油路刀柄



B65

CSO Oil-feed Holder Reducing Sleeve
CSO油路刀套



B65

PB Oil-feed Holder Positioning Block
PB油路止動塊



B65

ISO-GSK High Precision Chuck
ISO-GSK高速精密筒夾本體



B66

ISO-ER Spring Collet Chuck
ISO-ER彈性筒夾本體



B66

DSF Shrink Fit Extender
DSF燒結式熱裝延長杆



B67

SF Shrink Fit Extender
SF燒結式熱裝延長杆



B68

DC Collet Extender
DC直柄式小徑延伸杆



B68

DSK Collet Extender
DSK直柄彈性筒夾延長杆



B69

ER Collet Extender (M-Type)
M型直柄ER彈性筒夾延長杆



B69

ER Collet Extender
ER彈性筒夾延長杆



B70

VER Synchronized Tapping Extender
VER快換式微補償攻牙延長杆



B70

DC Slim Collet
DC小徑筒夾

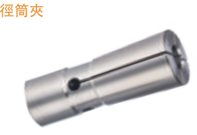

B71

DSK Precision Collet
DSK精密彈性筒夾



B72

ER Collet
ER彈性筒夾



B73

ER Tapping Chuck
ER攻絲刀柄



B74

SC Straight Collet
SC强力彈性直筒夾



B74

Hydraulic Collet - Flange Cooling
D型端面出水液壓刀柄轉換筒夾



B75

Hydraulic Collet - Internal Cooling
OD型中心出水液壓刀柄轉換筒夾



B75

TPE312 Tapping Collet
TPE312 絲錐筒夾



B76

TPE1024 Tapping Collet
TPE1024 絲錐筒夾



B77

TPD316 Tapping Collet
TPD316 絲錐筒夾

B78

TPD830 Tapping Collet
TPD830 絲錐筒夾

B79

J-Nut for High Speed Tool Holder
高速刀柄J型螺帽

B80

Clamping Nut For GSK Collet Chuck
GSK高速刀柄專用螺帽

B80

Clamping Nut For DSK Collet Chuck
DSK高速刀柄專用螺帽

B81

Clamping Nut For ER Collet Chuck
ER夾頭螺帽

B81

Seal Ring For ER Clamping Nut
ER螺帽止水環

B82

Wrench For GSK Tool Holder
GSK套筒專用扳手

B83

Wrench For DSK Tool Holder
DSK專用扳手

B83

Wrench For ER Tool Holder
ER專用扳手

B83

Wrench For Milling Chuck HPM
HPM强力彈性套筒專用扳手

B83

Wrench For Tool Holder MLC/HPC
MLC/HPC强力筒夾本體專用扳手

B84

Wrench For Drill Chuck SPU
SPU鑽夾頭專用扳手

B84

Wrench For TPD Tapping Collet
TPD絲錐筒夾扳手

B84

Wrench For MSK Nuts Seal
MSK密封蓋專用扳手

B84

Wrench For DC Extender
DC延長杆專用扳手

B84

BT Pull Stud Without Hole
BT螺栓拉頭

B85

BT Pull Stud With Cooling Hole
BT螺栓出水拉頭

B85

SK Pull Stud With Cooling Hole
SK螺栓拉頭

B85

MAZAK Pull Stud
MAZAK螺栓拉頭

B86

DIN2080 Pull Stud
DIN2080螺栓拉頭

B86

MTB Tension Screw
MTB拉緊拉頭

B86

Heating Machine
電磁誘導加熱

B88

ASR Screw-on Cutter For High-feed Milling
ASR鎖牙式大進給立銑刀



C01

EMR Screw-on Milling Cutter
EMR鎖牙式端銑刀頭



C01

TRS Screw-on Milling Cutter
TRS鎖牙式端銑刀頭



C02

RCF Screw-on Ball-nose Cutter For Roughing
RCF鎖牙式球形中粗刀頭



C02

BF Screw-on Ball-nose Cutter For Finishing
BF鎖牙式球形精銑刀頭



C03

300R/400R Screw-on Milling Cutter
300R/400R鎖牙式直角端銑刀頭



C03

AJU Screw-on Cutter For Drilling Milling
AJU鎖牙式過中心鑽銑刀頭



C04

R390 Screw-on Milling Cutter
R390鎖牙式端銑刀頭



C04

DS Solid Carbide Holder
DS抗振銑刀頭接杆



C05

AJX High Feed Indexable Milling Tool
AJX大進給立銑刀



C07

EXP High Feed Indexable Milling Tool
EXP大進給立銑刀



C08

SKS High Feed Indexable Milling Tool
SKS大進給立銑刀



C09

ASR High-feed Milling Cutter
ASR大進給立銑刀



C10

AHU Shoulder Milling Cutter
AHU直角臺肩銑刀



C11-C12

JRC Indexable End Mill
JRC捨弃式端銑刀



C13

EMR Indexable End Mill
EMR捨弃式端銑刀



C14-C15

EMRT Indexable End Mill
EMRT捨弃式端銑刀



C16

TRS Indexable Milling Cutter
TRS捨弃式端銑刀



C17-C18

RCF Ball-nose Indexable Cutter For Roughing
RCF球形中粗刀



C19

RCFL Ball-nose Indexable Cutter For Roughing
RCFL球形中粗刀



C20

BF Ball-nose Milling Cutter For Finishing
BF球頭精加工立銑刀



C21

300R/400R High Speed Indexable End Mill
300R/400R直角高速端銑刀



C22-C23

AJU Cutter For Centering And Drilling
AJU過中心鑽銑刀



C24

TCP Power Milling Cutter
TCP强力立銑刀



C25

R390 Indexable End Mill
R390捨弃式端銑刀



C26

ATS T-Slot Milling Cutter
ATS-T型槽端銑刀



C27

ASL Cutter For Drilling And Milling
ASL鑽銑共用型銑刀(短刃型)



C27

ASJ Cutter For Drilling And Milling
ASJ鑽銑共用型銑刀(短刃型)



C28

SKM High-speed Milling Cutter
SKM高速面銑刀



C28

TP Shoulder Milling Cutter
TP捨弃式直角銑刀



C29

APE Shell Mill For Roughing
APE粗切削端銑刀



C30

SPE Shell Mill For Roughing
SPE粗切削端銑刀



C30

CH Indexable Cutter For Pocketing
CH螺絲沉頭孔銑刀



C31

TP30,45,60 Chamfering Cutter
TP30度,45度,60度直柄型倒角刀



C31

EM45° Internal And External Chamfering Cutter
EM45度内外倒角刀



C32

SSK45° Chamfering Cutter
SSK45度捨弃式倒角刀



C32

SSP45° Cutter For Centering And Chamfering
SSP45度定位倒角刀



C33

SB Chamfering Cutter
SB新型倒角刀



C33

AJX High-feed Face Mill
AJX大進給面銑刀頭



C34

TXP High-feed Face Mill
TXP大進給面銑刀頭



C35

SKS High-feed Face Mill
SKS大進給面銑刀頭

C36

JRC Face Milling Cutter
JRC圓刀刃平面銑刀頭

C37

EMRW Face Milling Cutter
EMRW圓刀刃平面銑刀頭

C38

TRS Face Milling Cutter
TRS圓刀刃平面銑刀頭

C39

PE75° Face Milling Cutter
PE75度平面銑刀頭

C40

400R Square Face Mill
400R直角平面銑刀頭

C40

TP90° Square Face Mill
TP90度直角面銑刀頭

C41

TP90° Square Face Mill
TP90度直角面銑刀頭

C41

FP45° Face Mill Head
FP45度平面銑刀頭

C42

FP75° Face Mill Head
FP75度平面銑刀頭

C42

SE45° High-speed Face Mill
SE45度高速平面銑刀頭

C43

FM45° Aluminum Alloy Face Mill
FM45度鋁合金平面銑刀頭

C44

FM90° Face Milling Cutter (Aluminum Alloy)
FM90度鋁合金平面銑刀頭

C44

AMC Shell Mill For Roughing
AMC殼式粗切削端銑刀

C45

PMC Shell Cutter For Roughing
PMC殼式粗切削端銑刀

C46

BT-BMC Shell Cutter For Roughing
BT-BMC粗切削端銑刀

C46

GDC Indexable Side Cutter For Slotting
GDC捨弃式側銑刀

C47

SDC Indexable Side Cutter For Slotting
SDC捨弃式側銑刀

C48

FDC Indexable Side Cutter For Slotting
FDC捨弃式側銑刀

C49

ADC Indexable Side Cutter For Slotting
ADC捨弃式側銑刀

C50

MCLNR/L

D01

MCBNR/L

D01

MCKNR/L

D02

MCFNR/L

D02

MCGNR/L



D03

MCSNR/L



D03

MCMNN



D04

MCMNN-40



D04

MDJNR/L



D05

MDPNN



D05

MDQNR/L



D06

MSBNR/L



D06

MSDNN



D07

MSKNR/L



D07

MSSNR/L



D08

MTBNR/L



D08

MTENN



D09

MTJNR/L



D09

MTFNR/L



D10

MTGNR/L



D10

MTGNR/L



D11

MTQNR/L



D11

MVJNR/L



D12

MVQNR/L



D12

MVUNR/L



D13

MVVNN



D13

MWLNR/L



D14

WCKNR/L



D14

WCMNN



D15

WCLNR/L



D15

WCBNR/L



D16

WCMNN-40



D16

WTJNR/L



D17

WTQNR/L



D17

WTENN



D18

WWLNR/L



D18

SCACR/L



D19

SCBCR/L



D19

SCFCR/L



D20

SCKCR/L



D20

SCLCR/L



D21

SCMCN



D21

SCMCN-40



D22

SDACR/L



D22

SDFCR/L

D23

SDJCR/L

D23

SDNCN

D24

SDQCR/L

D24

SRACR/L

D25

SRDCN

D25

SRGCR/L

D26

STACR/L

D26

STECR/L

D27

STFCR/L

D27

STGCR/L

D28

STJCR/L

D28

STUCR/L

D29

STWCR/L

D29

SSBCR/L

D30

SSDCN

D30

SSKCR/L

D31

SSSCR/L

D31

SVJ*R/L

D32

SVQ*R/L

D32

SVU*R/L

D33

SVV*N

D33

MCKNR/L

D34

MCLNR/L

D35

MCWNR/L



D36

MDQNR/L



D36

MDUNR/L



D37

MDZNR/L

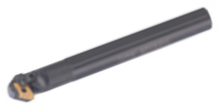

D37

MDWNR/L



D38

MDLNR/L



D38

MSKNR/L



D39

MSSNR/L



D39

MTFNR/L



D40

MTQNR/L



D40

MTUNR/L



D41

MTJNR/L



D42

MTWNR/L



D42

MVQR/L



D43

MVUNR/L



D43

MVWNR/L



D44

MVXNR/L



D44

MWLNR/L



D45

SCK*R/L



D46-D47

SCL*R/L



D48-D49

SCLCR/L*H



D50

SCLCR/L*P



D50

SCFCR/L



D51

SCZCR/L



D52

SDLCR/L



D53

SDQCR/L



D54

SDUCR/L



D55

SDWCR/L



D56

SDZCR/L



D57

SDXCR/L



D58

SSK*R/L



D59

SSS*R/L



D60

STFCR/L



D61

STFPR/L



D62

STUCR/L



D63

STUPR/L



D64

STWCR/L



D65

SVQ*R/L



D66

SVU*R/L



D67

SVZ*R/L



D68

SVW*R/L

D69

SVX*R/L

D70

SWLCR/L

D71

SWUBR/L

D72

SER/L

D73

SIR/L

D74

GT*R/L

D75

GT*R/L-L

D76

KTGR/L

D77

KTGFR/L

D77

MGEVR/L

D78

MGEHR/L

D78

MGEHR/L

D79

MGFVR/L

D80

MGFHRR

D80

MGFHRL

D81

MGFHR/L

D82

MGFHLL

D83

MGIVR/L

D84

QE*DR/L

D85

QF*D**LL**

D86

QF*D-L

D87

QF*D**RR**

D88

QF*D**RL**

D89

QF*D**LR**



D90

DP-2-E / Square / Standard / 2 Flutes
DP-2-E兩刃直柄平頭立銑刀

QZQ



D91

DP-2-EL / Square / Long / 2 Flutes
DP-2-EL兩刃直柄長刃平頭立銑刀

Q*DR/L



D91

DP-4-E / Square / Standard / 4 Flutes
DP-4-E四刃直柄平頭立銑刀

SNGR/L



D92

DP-4-EL / Square / Long / 4 Flutes
DP-4-EL四刃直柄平頭立銑刀



E01

DP-4-G-E / Square / Standard / 4 Flutes
DP-4-G-E四刃直柄平頭立銑刀



E02

DP-4-G-EL / Square / Long / 4 Flutes
DP-4-G-EL四刃直柄長柄平頭立銑刀



E03

DP-2-B / Ball / Standard / 2 Flutes
DP-2-B兩刃直柄球頭立銑刀



E04

DP-2-BL / Ball / Long / 2 Flutes
DP-2-BL兩刃直柄長柄球頭立銑刀



E05

DP-2-R / Corner Radius / Standard / 2 Flutes
DP-2-R兩刃直柄圓弧立銑刀



E06

DP-4-R /Corner Radius / Standard / 4 Flutes
DP-4-R四刃直柄圓弧立銑刀



E07

DG-2-E / Square / Standard / 2 Flutes
DG-2-E兩刃直柄平頭立銑刀



E08

DG-2-EL / Square / Long / 2 Flutes
DG-2-EL兩刃直柄長刃平頭立銑刀



E09

DG-2-ES / Square / Micro / 2 Flutes
DG-2-ES兩刃直柄微小徑平頭立銑刀



E10

DG-2-EP / Square / Long Neck / Short Flute / 2 Flutes
DG-2-EP兩刃直柄長頸短刃平頭立銑刀



E11

DG-4-E / Square / Standard / 4 Flutes
DG-4-E四刃直柄平頭立銑刀



E12

DG-4-EL / Square / Long / 4 Flutes
DG-4-EL四刃直柄長刃平頭立銑刀



E13

DG-4-G-E / Square / Standard / 4 Flutes
DG-4-G-E四刃 直柄平頭立銑刀



E14-E15

DG-4-G-EL / Square / Long / 4 Flutes
DG-4-G-EL四刃直柄長刃平頭立銑刀



E16

DG-6-E / Square / Standard / 6 Flutes
DG-6-E六刃直柄平頭立銑刀



E17

DG-6-EL / Square / Long / 6 Flutes
DG-6-EL六刃直柄長刃平頭立銑刀



E18

DG-2-B / Ball / Standard / 2 Flutes
DG-2-B兩刃直柄球頭立銑刀



E19

DG-2-BL / Ball / Long / 2 Flutes
DG-2-BL兩刃直柄長柄球頭立銑刀



E20

DG-2-BP / Ball / Long Neck / Short Flute / 2 Flutes
DG-2-BP兩刃直柄長頸短刃球頭立銑刀



E21

DG-4-B / Ball / Standard / 4 Flutes
DG-4-B四刃直柄球頭立銑刀



E22

DG-4-BL / Ball / Long / 4 Flutes
DG-4-BL四刃直柄長柄球頭立銑刀



E23

DG-2-R / Corner Radius / Standard / 2 Flutes
DG-2-R兩刃直柄圓弧立銑刀



E24-E25

DG-4-R / Corner Radius / Standard / 4 Flutes
DG-4-R四刃直柄圓弧立銑刀



E26

DG-4-RL / Corner Radius / Long / 4 Flutes
DG-4-RL四刃直柄長柄圓弧立銑刀



E27

E28

E29



E30

DG-4-W / Square / Standard / 4 Flutes / Waving
DG-4-W四刃直柄平頭波形刃立銑刀



E31

DH-4-E / Square / Standard / 4 Flutes
DH-4-E四刃直柄平頭立銑刀

DH-2-E / Square / Standard / 2 Flutes
DH-2-E兩刃直柄平頭立銑刀



E32

DH-4-EL / Square / Long / 4 Flutes
DH-4-EL四刃直柄長刃平頭立銑刀

DH-2-ES / Square / Micro / 2 Flutes
DH-2-ES兩刃直柄微小徑平頭立銑刀



E33

DH-6-E / Square / Standard / 6 Flutes
DH-6-E六刃直柄平頭立銑刀

DH-2-EP/Square /Long Neck/Short Flute /2 Flutes
DH-2-EP兩刃直柄長頸短刃平頭立銑刀



E34-E35

DH-6-EL / Square / Long / 6 Flutes
DH-6-EL 六刃直柄長刃平頭立銑刀



E36

DH-2-B / Ball / Standard / 2 Flutes
DH-2-B 兩刃直柄球頭立銑刀



E37

DH-2-BL / Ball / Long / 2 Flutes
DH-2-BL 兩刃直柄長柄球頭立銑刀



E38

DH-2-BP / Ball / Long Neck / Short Flute / 2 Flutes
DH-2-BP 兩刃直柄長頸短刃球頭立銑刀



E39

DH-2-BS / Ball / Micro / 2 Flutes
DH-2-BS 兩刃直柄微小徑球頭立銑刀

E40

DH-4-B / Ball / Standard / 4 Flutes
DH-4-B 四刃直柄球頭立銑刀

E41

DH-4-R / Corner Radius / Standard / 4 Flutes
DH-4-R 四刃直柄圓弧立銑刀

E42-E43

DH-4-RF / Corner Radius / Short Flute / 4 Flutes
DH-4-RF 四刃直柄短刃圓弧立銑刀

E44

DH-4-RP / Corner Radius / Long Neck / Short Flute / 4 Flutes
DH-4-RP 四刃直柄長頸短刃圓弧立銑刀

E45

DL-2-E / Square / Standard / 2 Flutes
DL-2-E 兩刃直柄平頭立銑刀

E46

DL-2-EL / Square / Long / 2 Flutes
DL-2-EL 兩刃直柄長刃平頭立銑刀

E47

DL-3-E / Square / Standard / 3 Flutes
DL-3-E 三刃直柄平頭立銑刀

E48

DL-3-EL / Square / Long / 3 Flutes
DL-3-EL 三刃直柄長刃平頭立銑刀

E49

DL-2-B / Ball / Standard / 2 Flutes
DL-2-B 兩刃直柄球頭立銑刀

E50

DL-3-W / Square / Standard / 3 Flutes / Waving
DL-3-W 三刃直柄平頭波形立銑刀

E51

E52

E53

E54

CCMT****-HF**

F03

CCMT****-EF**

F03

CCMT****-HM**

F03

CCMT****-EM**

F03

CCMT****-HR**

F04

CCGX****-LC**

F04

CCGX****-LH**

F04

WCMX****

F05

WCMX******-TM



F05

WCMX******-PG



F05

SPGT******-PM



F06

TCMT******-HQ



F06

TBGT******R/L



F07

TPGH******R/L



F07

RPEW****MO



F08

RPKW****MO



F08

RPKT****MOS



F08

RDMT****MOTN



F08

RCET****MO



F08

RCKT****MOE



F08

RCKT****MOR



F08

APKT******



F08

APMT****PDER



F08

WPKW******



F09

EPNW****TN



F09

EPNT****TN



F09

SEHT****AFSN



F09

SEGX****



F09

SEEN****AFTN
SPEN1203AFTN



F09

SEKR1203AFTN



F09

SPMW****04



F10

SPMW****08



F10

CCMT******-HF



F10

LPMT******



F10

TPKN****PDSKR



F10

R390-******



F11

CCMT******
CPMT******



F11

CPMT******Z



F11

CNMG******-DF



F12

CNMG******-EF



F12

CNMG******-PM



F12

CNMG******-DM



F12

CNMG******-EM



F13

CNMG******-DR



F13

CNMG******-ER



F13

CNMG******-TM



F13

DNMG******-DF



F14

DNMG******-EF

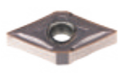

F14

DNMG******-PM

F14

DNMG******-DM

F14

DNMG******-DM

F15

DNMG******-EM

F15

DNMG******-DR

F15

SNMG******-DF

F16

SNMG******-EF

F16

SNMG******-PM

F16

SNMG******-DM

F16

SNMG******-EM

F17

SNMG******-DR

F17

SNMG******-TM

F17

TNMG******-DF

F18

TNMG******-EF

F18

TNMG******-PM

F18

TNMG******-DM

F18

TNMG******-EM

F19

TNMG******-DR

F19

TNMG******-ER

F19

TNMG******-TM

F19

VNMG******-DF

F20

VNMG******-PM

F20

VNMG******-EM

F20

VNMG******-TM

F20

WNMG******-DF



F21

WNMG******-EF



F21

WNMG******-PM



F21

WNMG******-DM



F22

WNMG******-EM



F22

WNMG******-DR



F22

CCMT******-HF



F23

CCMT******-EF



F23

CCMT******-HM



F23

CCMT******-EM



F23

CCMT******-HR



F24

CCGX******-LC



F24

CCGX******-LH



F24

DCMT******-HF



F25

DCMT******-EF

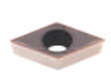

F25

DCMT******-HM



F25

DCMT******-EM

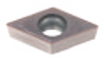

F25

DCMT******-HR



F25

DCGX******-LC



F25

DCGX******-LH



F25

RCMT****MO



F26

SCMT******-HF



F26

SCMT******-HM



F27

SCMT******-EM



F27

SCGX******-LH



F27

SCMT******-HR



F27

TCMT******-HF



F28

TCMT******-EF



F28

TCMT******-EM



F28

TCMT******-HM



F29

TCMT******-HR



F29

TCGX******-LC



F29

TCGX******-LH



F29

TCMT220408-TM



F29

VCGX******-LC



F30

VCGX******-LH



F30

VBGT******-SF



F31

VBMT******-EF



F31

VBMT******-HF



F31

VBMT******-EM



F31

VBGT******-HM

F31

MGMN***-G

F32

MGMN***-M

F32

ZTED****-MG

F32

ER*60/EL*60

F33

IR*60/IL*60

F33

ER*55/EL*55

F34

IR*55/IL*55

F34

ERISO/**EL**ISO

F35

IRISO/**IL**ISO

F36

ERUN/**EL**UN

F37

IRUN/**IL**UN

F38

ERW/**EL**W

F39

IRW/**IL**W

F40

ERTR/**EL**TR

F41

IRTR/**IL**TR

F41

Insert Screw
刀片螺釘

G01

Locking Screw
内六角螺釘

G02

Locking Screw
專用内六角螺釘

G03

Locking Screw
緊定螺釘

G04

Coolant Pipe
填充管

G05

Nut For DC Slim Collet Chuck
止動螺母

G05

Pin For Face Mill Arbor
鍵銷

G05

Washer For Face Mill Arbor
墊圈

G06

Nut For FBH Tools
過渡螺母

G06

Washer For ABH/DBH Boring Tool
墊片

G06

Insert Seat / Clamp
刀片座/壓板
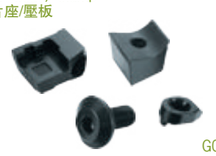
G07

Wrench For DYD Boring Tool
扳手

G07

Wrench Flag
旗形星形扳手

G08

Wrench - T
T形扳手

G08

Wrench - Star
直柄星形扳手

G08

Allen Key
L形扳手

G08

Shims For Turning Tool Holder
車刀刀墊
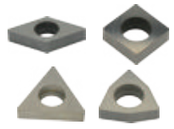
G09

Clamp For Turning Tool Holder
車刀壓板

G09

Clamps Screw For Turning Tool Holder
車刀壓板螺釘

G10

Center Screw For Turning Tool Holder
車刀中心螺釘

G10

Screw For Turning Rool Holder
車刀螺釘

G11

Z-Axial Zero Setter
Z-量表式Z軸設定器

G12

Z-Axial Zero Setter (Magentic)
Z-量表式Z軸設定器附磁性

G12

3D-Master
三軸（3D）設定器

G12

Mechanical Edge Sensor
機械式尋邊器

G13

Electronic Edge Sensor
光電式尋邊器

G13

Spindle Cleaner
清潔棒
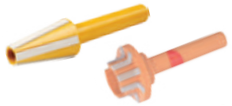
G13

Tool Lock (Fixed)
立卧式鎖刀座

G14

Tool Lock (Multi-Direction)
萬向式鎖刀座

G14

Trolley For Tool Holder
刀庫車

G14

Tooling Sheath
刀柄座

G14

DEREK

Tooling Arrangement Plan
工具系統配置圖

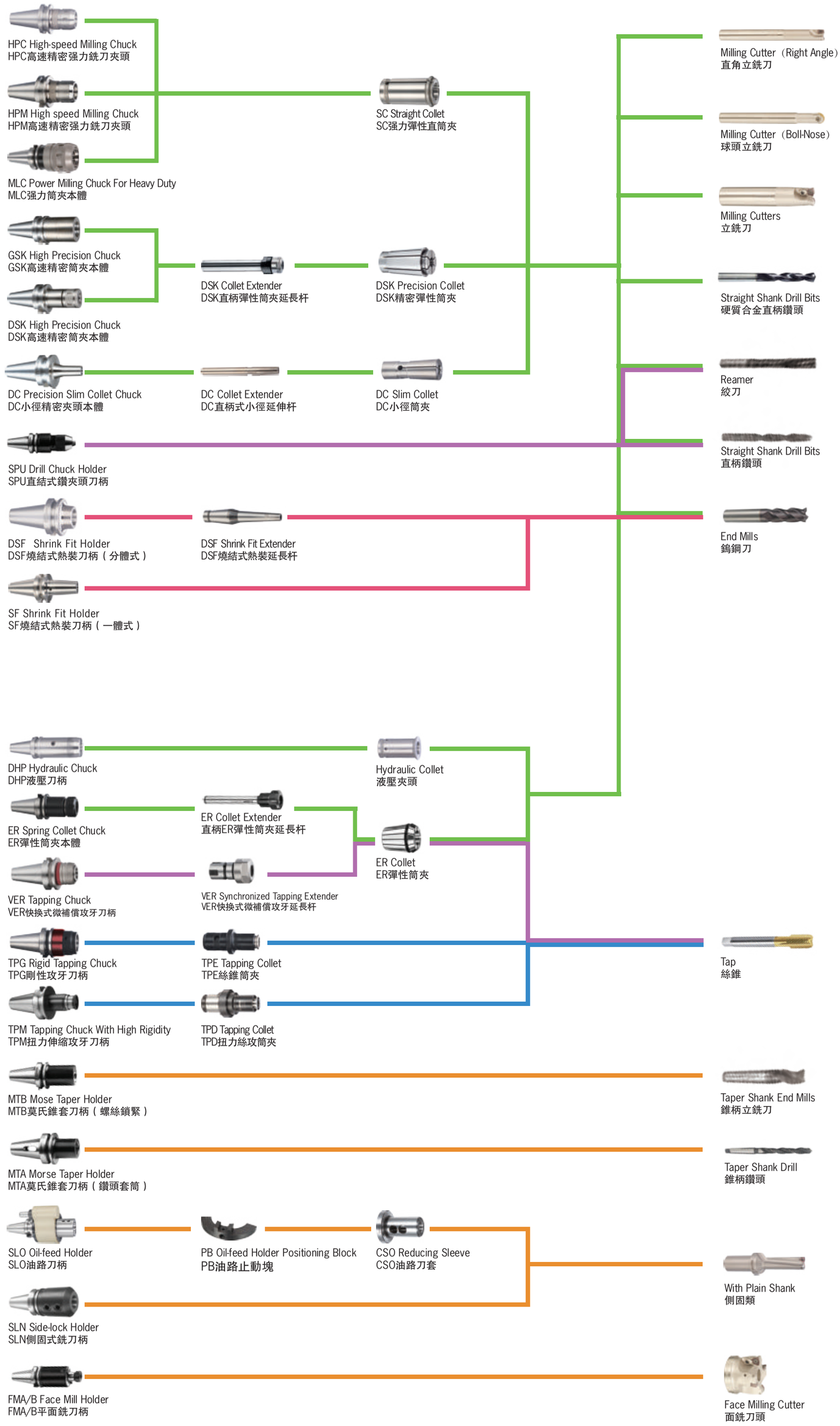

Modular Boring System
鏜刀組合系統

BST BORING SYSTEM
BST系列


BST Boring Adapter
BST鏜頭刀柄


FBH Large Diameter Boring Tool
FBH大徑極細微調精鏜頭


CBH Large Diameter Boring Tool For Finishing
CBH大徑微調精密鏜頭


DBH Large Diameter Rough Boring Tool
DBH大徑雙刃粗鏜頭


Flange
連接盤


Extension Bridge
橫向滑板


ABH Rough Boring Tool
ABH分體式粗鏜頭


FBH Micro Boring Tool
FBH極細微調精鏜刀


DBH Rough Boring Tool
DBH分體式粗鏜頭


CBH finish Boring Tool
CBH微調精密鏜頭


DYD Cartridge Boring Tool
DYD微調精密鏜頭


DBJ10/12/16 Micro-boring Head
DBJ10/12/16微調精密鏜頭


CBH-M Bridge Frame
CBH-M基礎架


BST Boring Adapter
BST鏜頭刀柄


Flange
連接盤


Extension Bridge
橫向滑板


Balanced Weight
平衡滑塊


Balance Weight
滑塊


Balance Weight
平衡塊


CBH Finish Boring Tool
CBH微調精密鏜頭


FBH Finish Head
FBH微調滑塊


Balance Weight
平衡滑塊


CBH Finish Head
CBH微調滑塊


Insert Holder For FBH Boring Boring Tool
FBH精鏜刀座

PS140-20


Insert Holder For FBH Back-Boring Head
FBH精鏜反鏜刀座


Balanced Weight
滑塊


Shim For Insert Holder
刀片座墊片


Insert Holder
刀片座及適用刀片


BM8


BM5

BM140-20

FBH Micro-Boring Bar
FBH精鏜刀杆


Insert Holder For FBH Boring Tool
FBH精鏜刀座


Insert Holder For FBH Back-Boring Head
FBH精鏜反鏜刀座


DBJ Collet For Solid Carbide Boring Bar
DBJ鎢鋼刀杆專用筒夾


DT Solid Carbide Boring Holder
DT抗震鎢鋼刀杆


DEB Insert Holder
DEB拾弃式鏜頭


DBJ10/12/16 Micro-boring Bar
DBJ10/12/16微調鏜頭刀杆

DCK BORING SYSTEM
DCK系列


DCK Boring Adapter
DCK鏜頭刀柄

DCK Reducer
DCK异徑轉換接柄（大接小）

DCK Extension
DCK等徑延長接柄

SCB Solid Carbide Boring Holder
SCB超硬整體碳化鎢鋼鏜刀杆

SSB-C32 Boring Holder
SSB-C32直柄鏜刀杆



FBH

FBH Micro Boring Tools - Characteristics
FBH極細微調精鏜刀特別介紹

■真正微米級超精密鏜頭，可調單位精度爲直徑0.002mm。
■每款鏜頭本體可搭配精鏜刀片座，精鏜刀杆或反鏜刀片座，以滿足不同加工形態。
■刀片座刀片安裝爲3度切入角，在盲孔加工時可有效清角。
■刀片座與本體采用齒狀貼合大大提高了鏜頭的剛性與加工性能。
■DCK-FBH精密鏜頭均具備内冷却功能，可有較提高表面粗糙度，延長刀片使用壽命。

■Adjustment precision 0.002 mm on diameter.
■One boring body with insert holder or boring bar can be for boring and back boring.
■Standard insert holder for inserts with lead angle 3°, for a better working performance during blind hole boring.
■The extensive area serrated with connection between insert holder and tool body provides higher tool rigidity and working performance.
■All DCK-FBH fine boring tools are with internal cooling design, which increases the surface finish and inserts tool life.

FBH Back Boring Instructions
FBH極細微調精鏜刀反鏜説明

反鏜加工需滿足條件：

$C > (D+d) /2$

D：反鏜加工孔直徑 d：鏜頭本體直徑 C：最小過孔直徑

In order to check the feasibility of the back boring operation and to select the best possible tool combination, these values can be calculated as follows:
C >(D+d) /2

C: Minimum entry bore diameter
D: Back bore diameter
d: Diameter of tool body

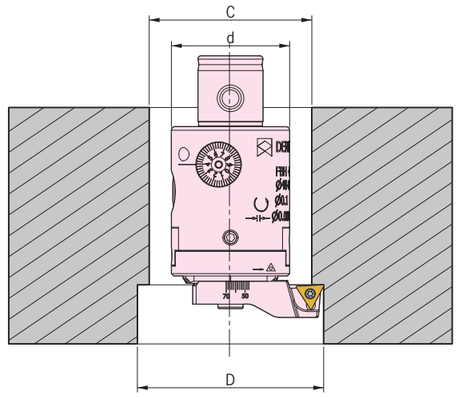

FBH

FBH Micro-boring Tool
FBH極細微調精鏜刀



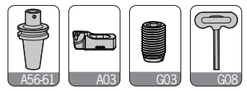

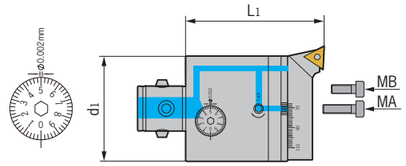

型號 Specification	d1	L1	鏜孔範圍 Boring range	組合刀柄 Adapter size	精鏜刀座 Insert holder	微調鎖緊螺釘 Adjusting screw	T型扳手 Wrench	重量 Weight
DCK2-FBH25-M	25	55	29-38	DCK2	MLTP2938	M040U050-D	T02	0.15
DCK3-FBH32-M	32	65	36-52	DCK3	MLTP3652	M040U060-D	T02	0.33
DCK4-FBH40-M	40	65	48-68	DCK4	MLTP4868	M050U080-D	T025	0.53
DCK5-FBH50-BM	50	82	57-80	DCK5	MLTP5780	M060U080-D	T03	1.02
DCK6-FBH63-BMA	64	82	70-110	DCK6	MLTP70110	M060U120-D	T03	1.70
DCK6-FBH80-BMB	80	101	110-150	DCK6	MLTP110150	M060U200-D	T03	3.50

FBH Micro Back-boring Tool
FBH極細微調精鏜反鏜刀





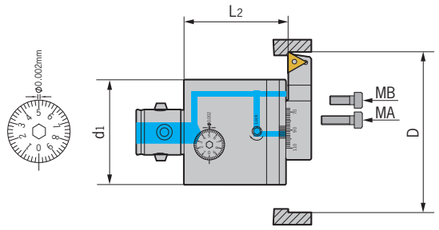

型號 Specification	d1	L2	鏜孔範圍 Boring range	組合刀柄 Adapter size	精鏜刀座 Insert holder	微調鎖緊螺釘 Adjusting screw	T型扳手 Wrench	重量 Weight
DCK2-FBH25-MK	25	44	29-38	DCK2	MRTP2938	M040U050-D	T02	0.13
DCK3-FBH32-MK	32	53.5	36-52	DCK3	MRTP3652	M040U060-D	T02	0.30
DCK4-FBH40-MK	40	53.5	48-68	DCK4	MRTP4868	M050U080-D	T025	0.50
DCK5-FBH50-BMK	50	63	57-80	DCK5	MRTP5780	M060U080-D	T03	1.00
DCK6-FBH63-BMKA	64	63	70-110	DCK6	MRTP70110	M060U120-D	T03	1.50
DCK6-FBH80-BMKB	80	81	110-150	DCK6	MRTP110150	M060U200-D	T03	3.30

FBH Micro-boring Body
FBH極細微調精鏜刀–精鏜刀本體

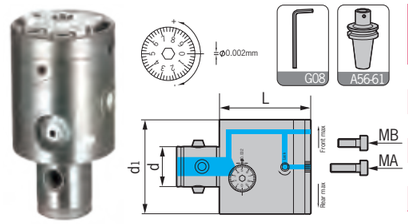

型號 Specification	d	d1	L	Front	Rear	BM	MA Bolt	MB Bolt	L型扳手 Wrench	重量 Weight
DCK2-FBH25	14	25	43	1	1	BM6	E050U160-D	-	L04	0.10
DCK3-FBH32	18	32	53	1	1	BM7	E050U160-D	-	L04	0.31
DCK4-FBH40	22	40	53	2	2	BM7	E050U160-D	-	L04	0.50
DCK5-FBH50	28	50	63	2	2	BM8	E100U250-D	-	L08	0.93
DCK6-FBH63	36	64	63	2	2	BM8	E100U250-D	-	L08	1.56
DCK6-FBH80	36	80	80	4	4	BM8	E100U250-D	E100U160-D	L08	2.91

FBH

FBH Micro-boring Bar
FBH精鏜刀杆



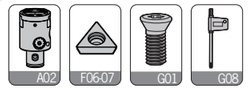

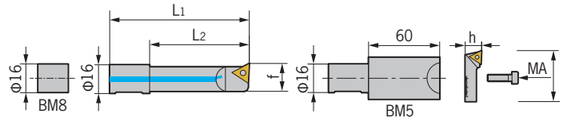

型號 Specification		L1	L2	鏜孔範圍 Boring range	組合鏜頭 Boring body	刀片 Insert	刀片螺釘 Insert screw	旗形扳手 Wrench	重量 Weight
DR	**1606-21**	65	21	6-9	DCK5-FBH50 DCK6-FBH63 DCK6-FBH80	WBGT0601..L	M020W040	Q06	0.04
	1608-28	63	28	8-11		TBGT0601..L	M020W040	Q06	0.04
	1610-35	63	35	10-13		TBGT0601..L	M020W040	Q06	0.05
	1612-42	73	42	12-15		TPGH0902..L	M025W060	Q08	0.06
	1614-50	78.5	50	14-17		TPGH0902..L	M025W060	Q08	0.08
	1616-60	88	60	16-20		TPGH0902..L	M025W060	Q08	0.11
	1620-65	92	65	20-24		TPGH1103..L	M030W070	Q08	0.16
	1624-68	95	68	24-28		TPGH1103..L	M030W070	Q08	0.20
	BM5	60+MLTP2938 or MLTP3652 or MLTP4868					E050U160	-	0.25
	BM8	+MLTP5780 or MLTP70110 or MLTP110150					E100U250	-	0.04

適用 Suitable:德克、京瓷或住友刀片 DEREK、KYOCERA Or SUMITOMO Insert

Insert Holder For FBH Boring Tool
FBH精鏜刀片座





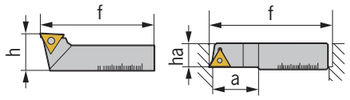

型號 Specification		h	f	鏜孔範圍 Boring range	組合鏜頭 Boring body	刀片 Insert	刀片螺釘 Insert screw	旗形扳手 Wrench	重量 Weight
MLTP	**2938**	11	27	29-38	DCK2-FBH25	TPGH0902..L	M025W050	Q08	0.01
	3652	13	35	36-52	DCK3-FBH32	TPGH0902..L	M025W060	Q08	0.02
	4868	13	43	48-68	DCK4-FBH40	TPGH0902..L	M025W060	Q08	0.03
	5780	20	54	57-80	DCK5-FBH50	TPGH1103..L	M030W070	Q08	0.09
	70110	20	66	70-110	DCK6-FBH63	TPGH1103..L	M030W070	Q08	0.14
	110150	20	106	110-150	DCK6-FBH80	TPGH1103..L	M030W070	Q08	0.25

適用 Suitable:德克、京瓷或住友刀片 DEREK、KYOCERA Or SUMITOMO Insert

Inserts Holder For FBH Back-boring Tool
FBH精鏜反鏜刀片座

型號 Specification		a	ha	f	鏜孔範圍 Boring range	組合鏜頭 Boring body	刀片 Insert	刀片螺釘 Insert screw	旗形扳手 Wrench	重量 Weight
MRTP	**2938**	6	11	27	29-38	DCK2-FBH25	TPGH0902..R	M025W050	Q08	0.01
	3652	10	11	35	36-52	DCK3-FBH32	TPGH0902..R	M025W060	Q08	0.02
	4868	12	11	43	48-68	DCK4-FBH40	TPGH0902..R	M025W060	Q08	0.03
	5780	14	15	54	57-80	DCK5-FBH50	TPGH1103..R	M030W070	Q08	0.08
	70110	16	15	66	70-110	DCK6-FBH63	TPGH1103..R	M030W070	Q08	0.12
	110150	25	15	106	110-150	DCK6-FBH80	TPGH1103..R	M030W070	Q08	0.19

適用 Suitable:德克、京瓷或住友刀片 DEREK、KYOCERA Or SUMITOMO Insert

FBH

DCK2-FBH25P Micro-finishing Boring Kit
DCK2-FBH25P極細微調精鏜孔系統



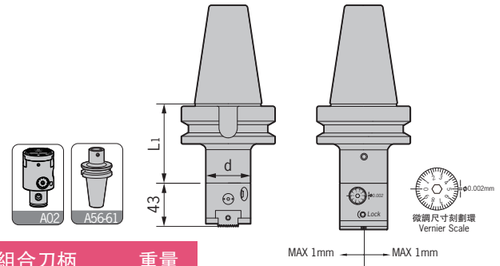

型號 Specification	L1	鏜孔範圍 Boring range	組合刀柄 Adapter size	重量 Weight
HSK63A-DCK2-FBH25P	75	2-7	HSK63A-DCK2-75	1.15
BT30-DCK2-FBH25P	80	2-7	BT30-DCK2-80	0.71
BT40-DCK2-FBH25P	75	2-7	BT40-DCK2-75	1.30
SK40-DCK2-FBH25P	75	2-7	SK40-DCK2-75	1.30

精鏜孔刀桿 Boring bar	鏜孔範圍 Boring range	深度 DM	重量 Weight
CA 0602-9	2-3.2	9	0.01
0603-16	3-4.2	16	0.01
0604-22	4-5.2	22	0.02
0605-28	5-6.2	28	0.02
0606-32	6-7.2	32	0.02

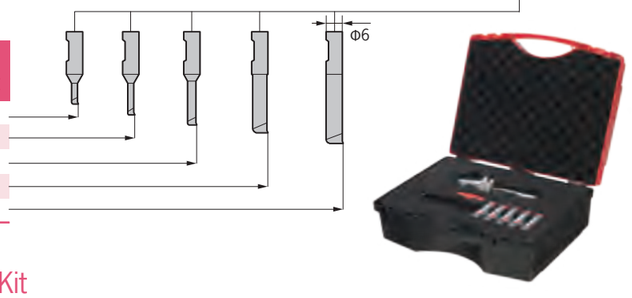

DCK3-FBH32P Micro-finishing Boring Kit
DCK3-FBH32P極細微調精鏜孔系統





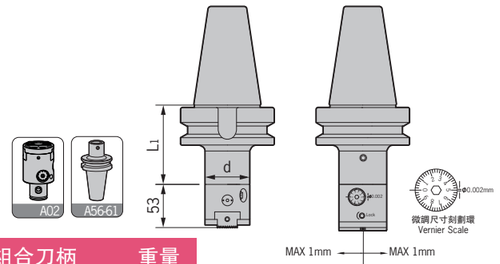

型號 Specification	L1	鏜孔範圍 Boring range	組合刀柄 Adapter size	重量 Weight
HSK63A-DCK3-FBH32P	80	2-9	HSK63A-DCK3-80	1.50
BT30-DCK3-FBH32P	80	2-9	BT30-DCK3-80	1.02
BT40-DCK3-FBH32P	80	2-9	BT40-DCK3-80	1.61
SK40-DCK3-FBH32P	80	2-9	SK40-DCK3-80	1.61

精鏜孔刀桿 Boring bar	鏜孔範圍 Boring range	深度 DM	重量 Weight
CA 0802-9	2-3.2	9	0.03
0803-16	3-4.2	16	0.03
0804-22	4-5.2	22	0.04
0805-28	5-6.2	28	0.04
0806-32	6-7.2	32	0.04
0807-36	7-8.2	36	0.04
0808-42	8-9.2	42	0.05

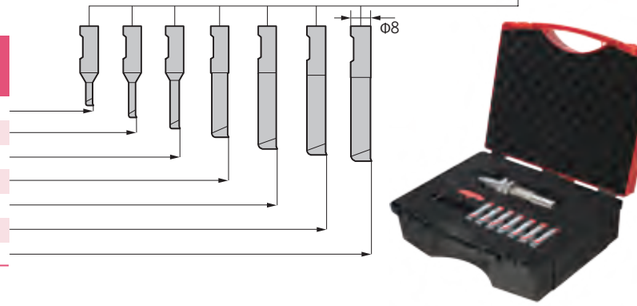

FBH

DCK4-FBH40P Micro-finishing Boring Kit
DCK4-FBH40P極細微調精鏜孔系統





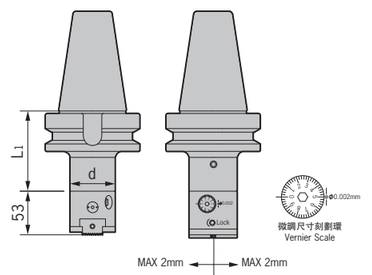

型號 Specification	L1	鏜孔範圍 Boring range	組合刀柄 Adapter size	重量 Weight
HSK63A-DCK4-FBH40P	70	2-9	HSK63A-DCK4-70	2.50
BT30-DCK4-FBH40P	70	2-9	BT30-DCK4-70	1.21
BT40-DCK4-FBH40P	70	2-9	BT40-DCK4-70	1.61
SK40-DCK4-FBH40P	70	2-9	SK40-DCK4-70	1.61

精鏜孔刀桿 Boring bar	鏜孔範圍 Boring range	深度 DM	重量 Weight
CA 0802-9	2-3.2	9	0.03
0803-16	3-4.2	16	0.03
0804-22	4-5.2	22	0.03
0805-28	5-6.2	28	0.04
0806-32	6-7.2	32	0.04
0807-36	7-8.2	36	0.04
0808-42	8-9.2	42	0.05

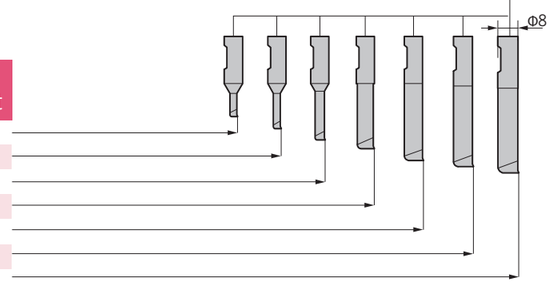



FBH

DCK5-FBH50P Micro-finishing Boring Kit
DCK5-FBH50P極細微調精鏜孔系統





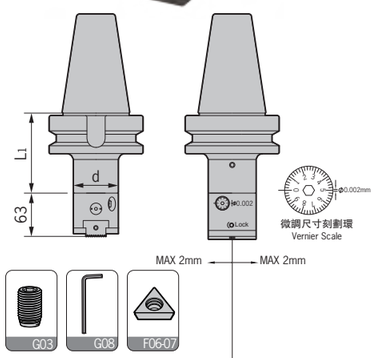

型號 Specification	L1	鏜孔範圍 Boring range	組合刀柄 Adapter size	BM側面鎖緊螺釘 BM Locking screw	L型扳手 Wrench	重量 Weight
HSK63A-DCK5-FBH50P	80	6-80	HSK63A-DCK5-80	M100U160-90-D	L05	4.02
BT30-DCK5-FBH50P	70	6-80	BT30-DCK5-70	M100U160-90-D	L05	2.90
BT40-DCK5-FBH50P	80	6-80	BT40-DCK5-80	M100U160-90-D	L05	3.54
BT50-DCK5-FBH50P	90	6-80	BT50-DCK5-90	M100U160-90-D	L05	6.32
SK40-DCK5-FBH50P	80	6-80	SK40-DCK5-80	M100U160-90-D	L05	3.54
SK50-DCK5-FBH50P	90	6-80	SK50-DCK5-90	M100U160-90-D	L05	6.32

注：用户可選配HSK50A、HSK100A鏜刀柄組合
Notice:Boring adapter HSK50A and HSK100A available on request.

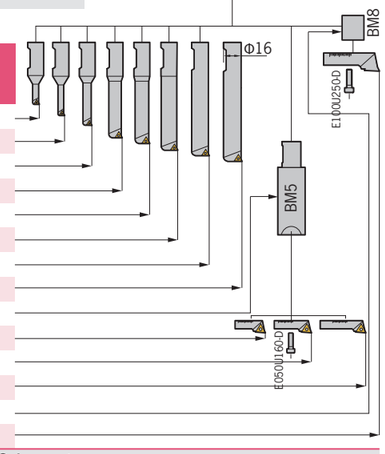

精鏜孔刀桿 Boring bar	鏜孔範圍 Boring range	深度 DM	刀片 Insert	重量 Weight
DR1606-21	6-9	21	WBGT0601..L	0.04
DR1608-28	8-11	28	TBGT0601..L	0.04
DR1610-35	10-13	35	TBGT0601..L	0.05
DR1612-42	12-15	42	TPGH0902..L	0.06
DR1614-50	14-17	50	TPGH0902..L	0.07
DR1616-60	16-20	60	TPGH0902..L	0.09
DR1620-65	20-24	65	TPGH1103..L	0.11
DR1624-68	24-28	68	TPGH1103..L	0.12
BM5		60+MLTP2938 or MLTP3652 or MLTP4868		0.25
MLTP2938	28-38	+11	TPGH0902..L	0.01
MLTP3652	36-52	+13	TPGH0902..L	0.02
MLTP4868	48-68	+13	TPGH0902..L	0.03
BM8		+MLTP5780		0.03
MLTP5780	57-80	+20	TPGH1103..L	0.10

適用 Suitable:德克、京瓷或住友刀片 DEREK、KYOCERA Or SUMITOMO Insert

FBH

DCK6-FBH63P Micro-finishing Boring Kit
DCK6-FBH63P極細微調精鏜孔系統





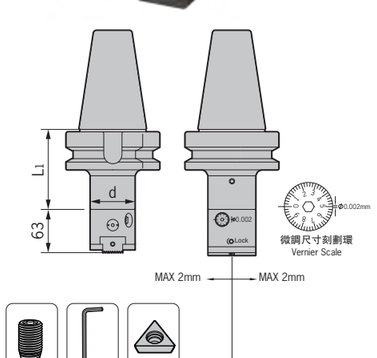

型號 Specification	L1	鏜孔範圍 Boring range	組合刀柄 Adapter size	BM側面鎖緊螺釘 BM Locking Screw	L型扳手 Wrench	重量 Weight
HSK63A-DCK6-FBH63P	100	6-150	HSK63A-DCK6-100	M100U200-90-D	L05	5.90
BT30-DCK6-FBH63P	60	6-150	BT30-DCK6-60	M100U200-90-D	L05	4.00
BT40-DCK6-FBH63P	55	6-150	BT40-DCK6-55	M100U200-90-D	L05	4.50
BT50-DCK6-FBH63P	85	6-150	BT50-DCK6-85	M100U200-90-D	L05	9.17
SK40-DCK6-FBH63P	90	6-150	SK40-DCK6-90	M100U200-90-D	L05	4.50
SK50-DCK6-FBH63P	85	6-150	SK50-DCK6-85	M100U200-90-D	L05	9.17

注：用户可選配HSK50A、HSK100A鏜刀柄組合
Notice:Boring adapter HSK50A and HSK100A available on request.

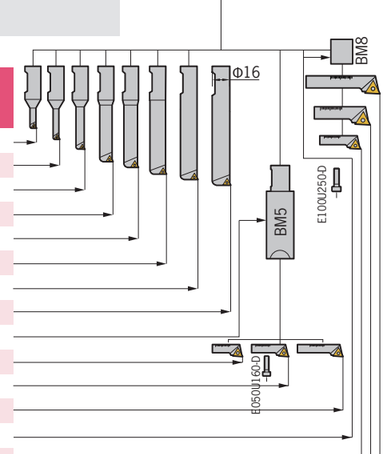

精鏜孔刀桿 Boring bar	鏜孔範圍 Boring range	深度 DM	刀片 Insert	重量 Weight
DR1606-21	6-9	21	WBGT0601..L	0.04
DR1608-28	8-11	28	TBGT0601..L	0.04
DR1610-35	10-13	35	TBGT0601..L	0.05
DR1612-42	12-15	42	TPGH0902..L	0.06
DR1614-50	14-17	50	TPGH0902..L	0.07
DR1616-60	16-20	60	TPGH0902..L	0.09
DR1620-65	20-24	65	TPGH1103..L	0.11
DR1624-68	24-28	68	TPGH1103..L	0.12
BM5		60+MLTP2938 or MLTP3652 or MLTP4868		0.25
MLTP2938	28-38	+11	TPGH0902..L	0.01
MLTP3652	36-52	+13	TPGH0902..L	0.02
MLTP4868	48-68	+13	TPGH0902..L	0.03
BM8		+MLTP5780 or MLTP70110 or MLTP110150		0.03
MLTP5780	66-80	+20	TPGH1103..L	0.10
MLTP70110	70-110	+20	TPGH1103..L	0.10
MLTP110150	110-150	+20	TPGH1103..L	0.21

適用 Suitable:德克、京瓷或住友刀片 DEREK、KYOCERA Or SUMITOMO Insert

FBH

DCK6-FBH80 Micro-finishing Boring Tool
DCK6-FBH80極細微調精鏜孔系統



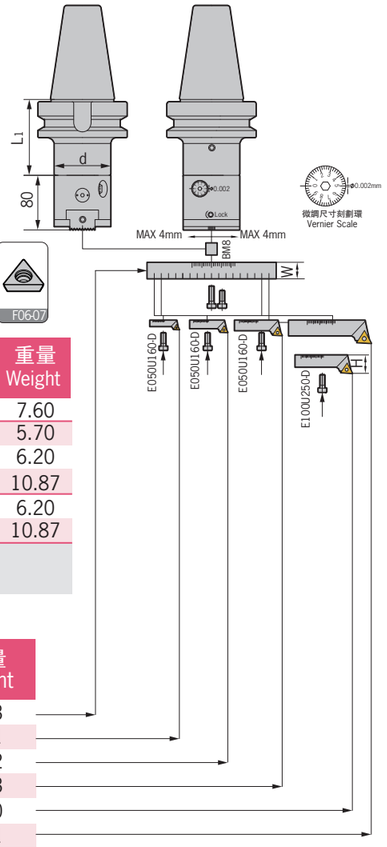



型號 Specification	L_1	鏜孔範圍 Boring range	組合刀柄 Adapter size	BM側面鎖緊螺釘 BM Locking screw	L型扳手 Wrench	重量 Weight
HSK63A-DCK6-FBH80	100	110-150	HSK63A-DCK6-100	M100U250-90-D	L05	7.60
BT30-DCK6-FBH80	60	110-150	BT30-DCK6-60	M100U250-90-D	L05	5.70
BT40-DCK6-FBH80	55	110-150	BT40-DCK6-55	M100U250-90-D	L05	6.20
BT50-DCK6-FBH80	85	110-150	BT50-DCK6-85	M100U250-90-D	L05	10.87
SK40-DCK6-FBH80	90	110-150	SK40-DCK6-90	M100U250-90-D	L05	6.20
SK50-DCK6-FBH80	85	110-150	SK50-DCK6-85	M100U250-90-D	L05	10.87

注：用户可選配HSK50A、HSK100A鏜刀柄組合
Notice:Boring adapter HSK50A and HSK100A available on request.

型號 Specification	鏜孔範圍 Boring range	H	刀片座鎖緊螺釘 Locking screw	L型扳手 Wrench	重量 Weight
PS140-20	+BM8	20	E100U250-D/E100U160-D	L08	0.43
MLTP2938	150-200	11	E050U160-D	L04	0.01
MLTP3652	160-210	13	E050U160-D	L04	0.02
MLTP4868	170-220	13	E050U160-D	L04	0.03
MLTP70110	140-240	20	E100U250-D	L08	0.10
MLTP110150	180-280	20	E100U250-D	L08	0.21

適用 Suitable:德克、京瓷或住友刀片 DEREK、KYOCERA Or SUMITOMO Insert

FBH

FBH Large Diameter Boring Tool
FBH大徑極細微調精鏜頭



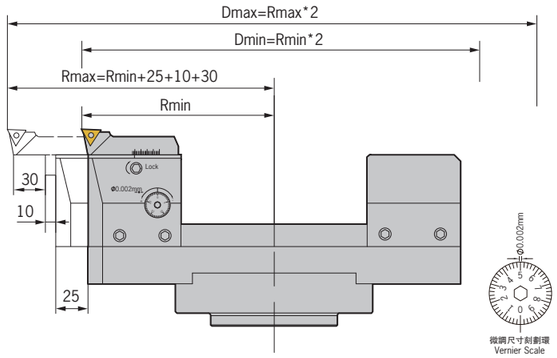

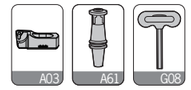

型號 Specification		鏜孔範圍 Boring range	大孔徑精鏜系統組合 Micro-Finishing boring system 橫向滑塊 Extention bridge	鏜頭刀柄 Boring adapter	大孔徑精鏜孔刀本體 Boring body	平衡座 Balance weight	精鏜孔刀座 Insert holder	重量 Weight
BST-	**FBH200-310**	200-260	DST200	BST	DSJ200	DSP200	MLTP70110	9.70
		250-310	DST200	BST	DSJ200	DSP200	MLTP110150	9.80
	FBH300-410	300-360	DST300	BST	DSJ200	DSP200	MLTP70110	11.70
		350-410	DST300	BST	DSJ200	DSP200	MLTP110150	11.80
	FBH400-510	400-460	DST400	BST	DSJ200	DSP200	MLTP70110	13.70
		450-510	DST400	BST	DSJ200	DSP200	MLTP110150	13.80
	FBH500-610	500-560	DST500	BST	DSJ200	DSP200	MLTP70110	15.70
		550-610	DST500	BST	DSJ200	DSP200	MLTP110150	15.80
	FBH600-710	600-660	DST600	BST	DSJ200	DSP200	MLTP70110	17.70
		650-710	DST600	BST	DSJ200	DSP200	MLTP110150	17.80
	FBH700-810	700-760	DST700	BST	DSJ200	DSP200	MLTP70110	19.70
		750-810	DST700	BST	DSJ200	DSP200	MLTP110150	19.80
	FBH800-910	800-860	DST800	BST	DSJ200	DSP200	MLTP70110	21.70
		850-910	DST800	BST	DSJ200	DSP200	MLTP110150	21.80

DST

DST Extension Bridge
DST横向滑塊

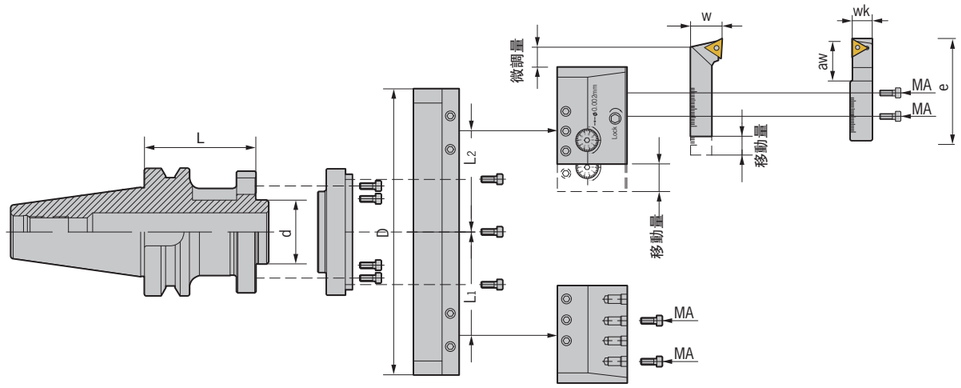

型號 Specification	D	L1	L2	重量 Weight
DST-200	180	61	66	3.40
300	280	111	116	5.40
400	380	161	166	7.40
500	480	211	216	9.40

型號 Specification	D	L1	L2	重量 Weight
DST-600	580	261	266	11.40
700	680	311	316	13.40
800	780	361	366	15.40



DSJ Boring Body, DSP Balance Weight
DSJ精鏜刀本體+DSP平衡座

型號 Specification	移動量 Mobile	微調量 Micro mobile	MA Bolt	扳手 Wrench	重量 Weight
DSJ-200	25	10	E100U200-D	L08	3.00
DSP-200	-	-	E100U200-D	L08	3.00



Insert Holder For FBH Boring Tool
FBH精鏜刀片座

型號 Specification	w	e	移動量 Mobile	刀片 Insert	螺釘 Screw	扳手 Wrench	重量 Weight
MLTP70110	20	66	15	TPGS1103L	E100U200-D	L08	0.10
MLTP110150	20	106	30	TPGS1103L	E100U200-D	L08	0.21

適用 Suitable:德克、京瓷或住友刀片 DEREK、KYOCERA Or SUMITOMO Insert



Insert Holder For FBH Back-boring Head
FBH精鏜反鏜刀片座

型號 Specification	aw	wk	e	移動量 Mobile	刀片 Insert	螺釘 Screw	扳手 Wrench	重量 Weight
MRTP70110	16	15	66	15	TPGH1103R	E100U200-D	L08	0.10
MRTP110150	25	15	106	30	TPGH1103R	E100U200-D	L08	0.21

適用 Suitable:德克、京瓷或住友刀片 DEREK、KYOCERA Or SUMITOMO Insert

CBH

DCK Modular Boring Tools
DCK模塊式鏜刀系列

高精度，強力，操作方便--最理想的連接方式

High Precision, High Strength And Easy Operation--the Best Connection Style

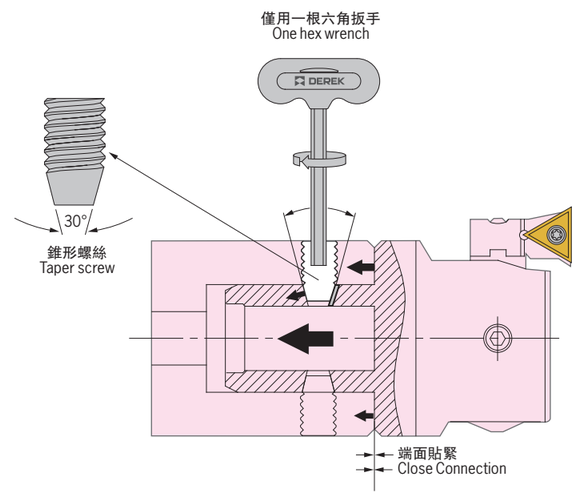

A

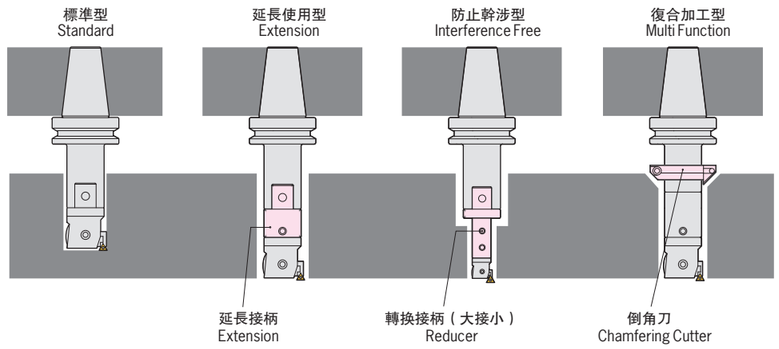

B

■依靠30度錐形螺絲，把緊固力轉換成軸向拉力，使鏜刀端面與本體端面貼緊。（如圖A）
■模塊式設計，可以自由設定加工直徑和有效加工深度，配用。轉換接頭（大接小）減少刀具直徑，既可以確保剛性，又可以防止幹涉，再配合倒角器可自由組合成最合適的鏜削刀具。（如圖B）
■因鏜頭與本體的連接精度非常高所以祇需對鏜頭單獨對刀，可減輕勞動强度，提高工作效率，降低綜合成本。

■Close connection between boring head and arbor is achieved with the taper screws, which provide locking force in axial direction. (Fig A)
■Modular design makes the setting of boring range and depth possible and easy. Reducers, extensions and chamfering rings provide multifunctional work. (Fig B)
■High work efficiency brings down the production cost.

CBH

CBH Micro Boring Tools- Characteristics
CBH微調精密鏜頭特別介紹

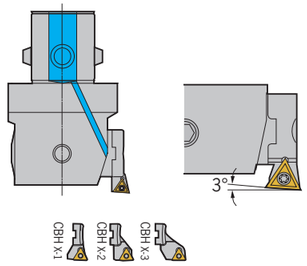

■每個鏜頭本體均配有三個不同加工範圍的刀片座，來擴大本體的加工尺寸。
■刀片座刀片安裝爲3度切入角，在盲孔加工時可有效清角。
■變更刀片座安裝方向即可實現反鏜加工。
■刀片座與本體采用雙面貼合大大提高了鏜頭的剛性與加工性能。
■DCK-CBH款精密鏜頭均具備内冷却功能，可有較提高表面粗糙度，
延長刀片使用壽命。(這個説明是針對所有的DCK精鏜)

■Each boring head with three different sizes insert holders for different boring ranges.
■Standard insert holder for inserts with lead angle 3°, for a better working performance during blind hole boring.
■Insert holder can be mounted in opposite direction to back boring.
■Better connection between insert holder and tool body provides higher tool rigidity and working performance.
■All DCK-CBH fine boring tools are with internal cooling design, which increases the surface finish and inserts tool life.

型號 Specification	形狀圖 Figure	對應鏜頭 Boring head
CBH 1-1 1-2 1-3 2-1 2-2 2-3 3-1 3-2 3-3	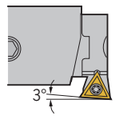 對應刀片 TPGH080202	DCK1-CBH20-36 DCK2-CBH25-47 DCK3-CBH32-60
CBH 4-1 4-2 4-3 5-1 5-2 5-3 6-1 6-2 6-3	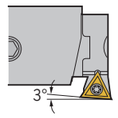 對應刀片 TCMT110204 (標配 With) TPGH110304 (選配) (For choice)	DCK4-CBH41-74 DCK5-CBH53-95 DCK6-CBH68-150 DCK6-CBH100-203
CBH 4-1 4-2 4-3 5-1 5-2 5-3 6-1 6-2 6-3	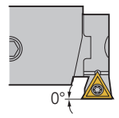 對應刀片 TCMT110204 (選配) (For choice)	DCK4-CBH41-74 DCK5-CBH53-95 DCK6-CBH68-150 DCK6-CBH100-203

注意：標準報價含CBHX-1號刀片座一個，CBHX-2和CBHX-3需另外單獨購買。
Notice:Quotation with insert holder CBHX-1 included,while CBHX-2 and CBHX-3 shall be ordered separately.

CBH Boring Instructions
CBH微調精密鏜頭説明

反鏜加工需滿足條件：

$C > (D+d)/2$

D：反鏜加工孔直徑 d：鏜頭本體直徑 C：最小過孔直徑
反鏜加工時主軸反轉

In order to check the feasibility of the back boring operation and to select the best possible tool combination, these values can be calculated as follows:

$C > (D+d)/2$

C: Minimum entry bore diameter
D: Back bore diameter
d: Diameter of tool body
Anti-clockwise spindle rotation required.

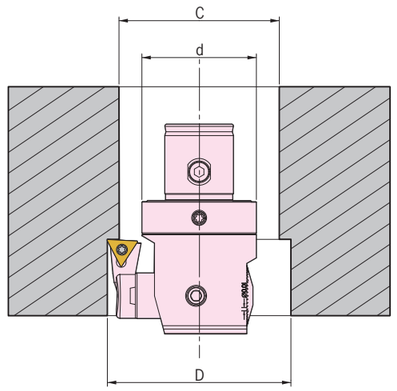

CBH

CBH Finish Boring Tool
CBH微調精密鏜頭



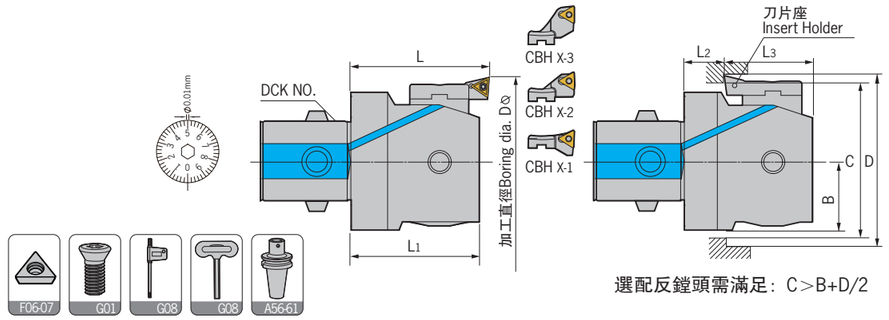

選配反鏜頭需滿足：C＞B+D/2

型號 Specification	正鏜 Boring L1	L	範圍 Range	反鏜 Back boring B	L2	L3	範圍 Range	刀片座 Insert holder	刀片 Insert	螺釘 Screw	扳手 Wrench	重量 Weight
	29.5	32.5	20-26	10	10.5	19	-	CBH1-1	TPGH 080202	M020W050	Q06	0.06
DCK1-CBH20-36	29.5	32.5	25-31	10	10.5	19	-	CBH1-2				0.06
	29.5	32.5	30-36	10	10.5	19	30-36	CBH1-3				0.06
	32.5	35.5	25-33	12.5	11.5	21	36-40	CBH2-1				0.12
DCK2-CBH25-47	32.5	35.5	32-40	12.5	11.5	21	36-40	CBH2-2				0.12
	32.5	35.5	39-47	12.5	11.5	21	39-47	CBH2-3				0.12
	35	40	32-42	16	10	25	-	CBH3-1				0.20
DCK3-CBH32-60	35	40	41-51	16	10	25	46-51	CBH3-2				0.20
	35	40	50-60	16	10	25	50-60	CBH3-3				0.20
	43	47	41-54	20	14	29	-	CBH4-1				0.39
DCK4-CBH41-74	43	47	50-63	20	14	29	53-63	CBH4-2				0.39
	43	47	61-74	20	14	29	61-74	CBH4-3				0.39
	53	57	53-70	25.5	19	34	62-70	CBH5-1				0.80
DCK5-CBH53-95	53	57	65-82	25.5	19	34	65-82	CBH5-2				0.80
	53	57	78-95	25.5	19	34	78-95	CBH5-3				0.80
	67.2	71	68-100	32.5	22	45.2	80-100	CBH6-1	TCMT 110204 (標配 With) TPGH 110304 (選配) (For choice)	M025W060 M030W070	Q08	1.75
DCK6-CBH68-150	67.2	71	94-126	32.5	22	45.2	94-126	CBH6-2				1.75
	67.2	71	118-150	32.5	22	45.2	118-150	CBH6-3				1.75
	67.2	71	100-153	45.5	22	45.2	112-153	CBH6-1				2.47
DCK6-CBH100-203	67.2	71	126-179	45.5	22	45.2	126-179	CBH6-2				2.47
	67.2	71	150-203	45.5	22	45.2	150-203	CBH6-3				2.47
	67.2	71	100-153	45.5	22	45.2	112-153	CBH6-1				2.78
DCK7-CBH100-203	67.2	71	126-179	45.5	22	45.2	126-179	CBH6-2				2.78
	67.2	71	150-203	45.5	22	45.2	150-203	CBH6-3				2.78

適用 Suitable:德克、京瓷或住友刀片 DEREK、KYOCERA Or SUMITOMO Insert

特 點 / Feature

■中心内冷。
■設動平衡結構，能達可靠加工精度。
■標準相對反鏜加工，加大附加值。

■With internal cooling supply.
■With balanced structure high machining precision accuracy promissed.
■High cost effectiveness with back-boring function .

CBH

CBH Large Diameter Boring Tool For Finishing
CBH大徑微調精密鏜頭



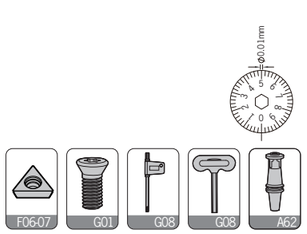

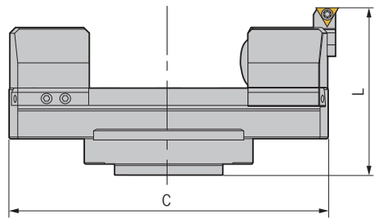

鏜孔範圍Φ200-Φ929mm組合系列 Boring Range: Φ200-Φ929mm

型號 Specification	C	L	鏜孔範圍 Boring range	組合刀柄 Adapter size	反鏜範圍 B-Boring range	反鏜深度 Work depth	刀片座 Insert holder	刀片型號 Insert	刀片螺釘 Insert screw	扳手 Wrench	重量 Weight
BST-CBH200329	180	130	200-305	BST	0-25	53	CBH6-1	TCMT110204 (標配 With) TPGH110304 (選配) (Optional)	M025W060 M030W070	L04 L05 Q08	11.85
	180	130	224-329	BST	-	53	CBH6-2				11.85
BST-CBH300429	280	130	300-405	BST	25-125	53	CBH6-1				13.86
	280	130	324-429	BST	25-100	53	CBH6-2				13.86
BST-CBH400529	380	130	400-505	BST	125-225	53	CBH6-1				15.87
	380	130	424-529	BST	100-200	53	CBH6-2				15.87
BST-CBH500629	480	130	500-605	BST	225-325	53	CBH6-1				17.88
	480	130	524-629	BST	200-300	53	CBH6-2				17.88
BST-CBH600729	580	130	600-705	BST	325-425	53	CBH6-1				19.89
	580	130	624-729	BST	300-400	53	CBH6-2				19.89
BST-CBH700829	680	130	700-805	BST	425-525	53	CBH6-1				21.91
	680	130	724-829	BST	400-500	53	CBH6-2				21.91
BST-CBH800929	780	130	800-905	BST	525-625	53	CBH6-1				23.94
	780	130	824-929	BST	500-600	53	CBH6-2				23.94

滑塊緊固螺釘: M080U100-D 微調鎖緊螺釘: M080U160-D T型扳手: T04 B-Boring Range: Back Boring Range

特 點 / Feature

■鏜孔範圍加大。
■刀片座加工工藝提升後，調節穩定性加强。
■Wider boring range.
■Better stability of adjustment after improvement on insert holder.

產品/配件 Item	型號 Specification	圖示 Picture	重量 Weight
組合刀柄 Adapter size	**HSK-BST**		-
	BT-BST		-
	SK-BST		-
連接盤 Flange	**BST-FL200**		2.61
橫向滑板 Extension bridge 可選用鋁質	**DST200**		3.40/1.20(鋁材Al.)
	DST300		5.40/1.85(鋁材Al.)
	DST400		7.40/2.50(鋁材Al.)
	DST500		9.40/3.15(鋁材Al.)
	DST600		11.40/3.80(鋁材Al.)
	DST700		13.40/4.45(鋁材Al.)
	DST800		15.40/5.10(鋁材Al.)
平衡滑塊 Balance weight	**DBN300**		1.96
微調滑塊 Finish head	**CB200**		1.96

適用 Suitable:德克、京瓷或住友刀片 DEREK、KYOCERA Or SUMITOMO Insert

CBH-M

CBH-M Boring Tool For Pin Turning
CBH-M微調精密外徑鏜頭



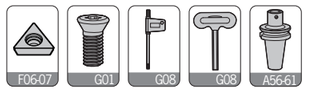

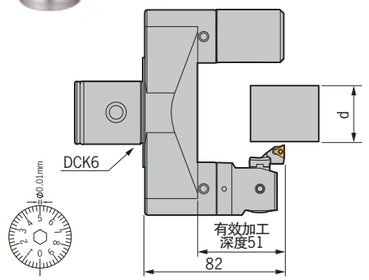

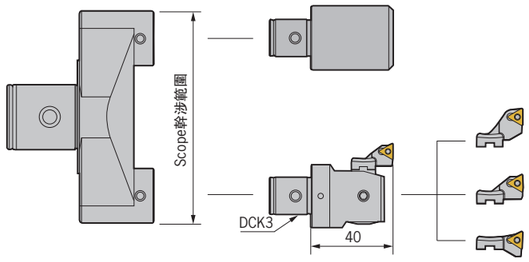

型號 Specification	鏜外徑Φd Range	基礎架 Bridge frame	DCK側固螺釘 Side-lock screw	鏜頭 Boring head	平衡塊 Balance weight	刀片座 Insert holder	刀片 Insert	鏜孔範圍 Boring range	重量 Weight
DCK6-CBH 24-34-M	24-34	DCK6-2452-42 幹涉範圍114	M120Z200-30P-D	CBH32-60	DCK3-CBH	CBH3-3	TPGH0802	134-144	1.60
33-43-M	33-43			CBH32-60	DCK3-CBH	CBH3-2	TPGH0802	125-135	1.60
42-52-M	42-52			CBH32-60	DCK3-CBH	CBH3-1	TPGH0802	116-126	1.60
52-62-M	52-62	DCK6-5280-42 幹涉範圍142	M120Z200-30P-D	CBH32-60	DCK3-CBH	CBH3-3	TPGH0802	162-172	1.80
61-71-M	61-71			CBH32-60	DCK3-CBH	CBH3-2	TPGH0802	153-163	1.80
70-80-M	70-80			CBH32-60	DCK3-CBH	CBH3-1	TPGH0802	144-154	1.80
80-90-M	80-90	DCK6-80108-42 幹涉範圍170	M120Z200-30P-D	CBH32-60	DCK3-CBH	CBH3-3	TPGH0802	190-200	2.00
89-99-M	89-99			CBH32-60	DCK3-CBH	CBH3-2	TPGH0802	181-191	2.00
98-108-M	98-108			CBH32-60	DCK3-CBH	CBH3-1	TPGH0802	172-182	2.00

適用 Suitable:德克、京瓷或住友刀片 DEREK、KYOCERA Or SUMITOMO Insert

注意：1.CBH鏜頭上附帶1衹刀片座，但不附帶刀片，請另外訂購。 2.加工時，主軸應反轉。
Notice:1. Boring head with one insert holder, without insert, please order it separately. 2. Anti-clockwise spindle rotation required.

特 點 / Feature

■CBH鏜頭反向裝可以進行鏜孔加工。
■加工範圍Φ116-Φ200。
■CBH boring head loaded reverse direction can process boring machining.
■Machining rangeΦ116-Φ200.

CBH-L

CBH-L Boring Tool For Pin Turning (Large Diameter)
CBH-L微調精密外徑鏜頭



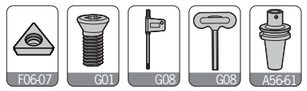

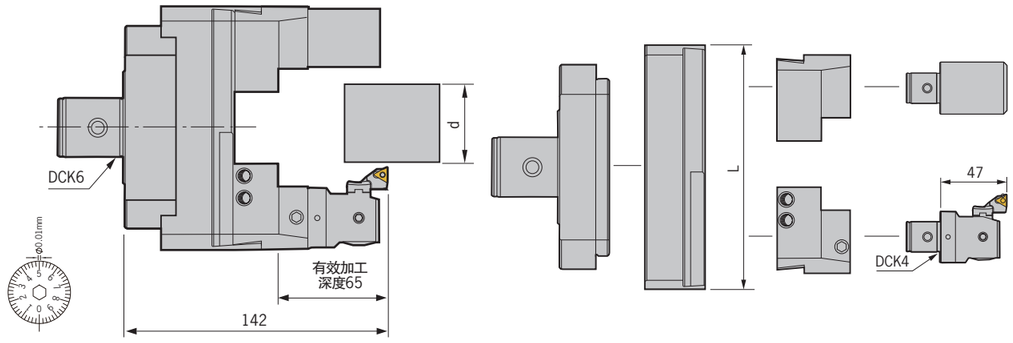

型號 Specification	鏜外徑Φd Range	連接盤 Flange adapter	橫向滑板 Extention bridge	L	滑塊 Balance weight	鏜頭 Boring head	鏜孔範圍 Boring range	鏜孔深度 Boring depth	平衡塊 Finish head	重量 Weight
DCK6-CBH 13-115-L	13-115	DCK6-FL200	DST200	180	DCK4-CB200	CBH41-74 刀片座4-1 刀片TCMT1102 TPGH110304	108-192	75，Φ＜180	DCK4-CBH	9.19
112-215-L	112-215	DCK6-FL200	DST300	280	DCK4-CB200		108-292	75，Φ＜280	DCK4-CBH	11.22
212-315-L	212-315	DCK6-FL200	DST400	380	DCK4-CB200		108-392	75，Φ＜380	DCK4-CBH	13.12
312-415-L	312-415	DCK6-FL200	DST500	480	DCK4-CB200		108-492	75，Φ＜480	DCK4-CBH	15.02
412-515-L	412-515	DCK6-FL200	DST600	580	DCK4-CB200		108-592	75，Φ＜580	DCK4-CBH	16.92
512-615-L	512-615	DCK6-FL200	DST700	680	DCK4-CB200		108-692	75，Φ＜680	DCK4-CBH	18.90
612-715-L	612-715	DCK6-FL200	DST800	780	DCK4-CB200		108-792	75，Φ＜780	DCK4-CBH	20.80

適用 Suitable:德克、京瓷或住友刀片 DEREK、KYOCERA Or SUMITOMO Insert

滑塊緊固螺釘:M080U100–D

注意：1.CBH鏜頭上附帶1衹刀片座(CBH4-1)，但不附帶刀片，請另外訂購。2.加工時，主軸應反轉。
Notice:1.Boring head with one insert holder, without insert, please order it separately.　2. Anti-clockwise spindle rotation required.

DYD

DYD Cartridge Boring Tool
DYD微調精密鏜頭



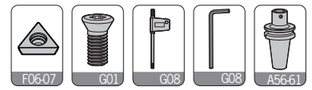

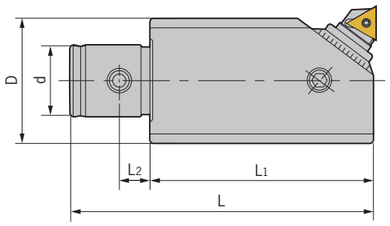

斜置安裝型 Inclined Mounting Type

型號 Specification	D	d	L1	L2	L	鏜孔範圍 Boring range	組合刀柄 Adapter size	組合鏜頭 Insert holder	刀片型號 Insert	側面鎖緊螺釘 Locking screw	L型扳手 Wrench	重量 Weight
DCK1-DYD20-22	18	11	35	4.65	51	20-22.5	DCK1	M2-DYD20	TBGH0601	M040U040-D	L02	0.10
DCK1-DYD22-29	20	11	35	4.65	51	22-29.5	DCK1	M2-DYD22	TBGH0601	M040U050-D	L02	0.11
DCK2-DYD29-41	25	14	45	62	61	29-41	DCK2	M3-DYD29	TBGH0601	M040U060-D	L02	0.17
DCK3-DYD38-50	35	18	70	7.5	90	38-50	DCK3	M5-DYD38	TPGH1103	M050U060-D	L025	0.50
DCK4-DYD48-65	41	22	60	9.5	86	48-65	DCK4	M5-DYD48	TPGH1103	M060U120-D	L03	0.70
DCK5-DYD62-90	54	28	80	12.4	110	62-90	DCK5	M7-DYD62	TPGH1603	M080U160-D	L04	1.37
DCK6-DYD82-110	67	36	110	15	150	82-110	DCK6	M7-DYD82	TPGH1603	M080U200-D	L04	3.20
DCK6-DYD105-140	84	36	130	15	170	105-140	DCK6	M9-DYD105	TPGH1603	M080U200-D	L04	4.53
DCK6-DYD135-175	98	36	140	15	180	135-175	DCK6	M9-DYD135	TPGH1603	M080U200-D	L04	5.61

適用 Suitable:德克、京瓷或住友刀片 DEREK、KYOCERA Or SUMITOMO Insert

Insert Holder For DYD Cartridge Boring Tool
DYD微調精密鏜頭微調器





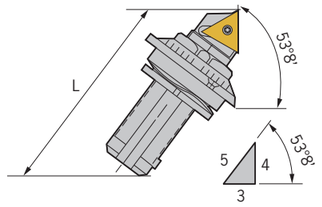

規格 Specification	L	鏜孔範圍 Boring range	刀片型號 Insert	刀片螺釘 Insert screw	旗形扳手 Wrench	重量 Weight
M2-DYD20	20.7	20-22.5	TBGH0601	M020W040	Q06	0.01
M2-DYD22	23.5	22-29.5	TBGH0601	M020W040	Q06	0.01
M3-DYD29	31.0	29-41	TBGH0601	M020W040	Q06	0.03
M5-DYD38	40.0	38-50	TPGH1103	M030W070	Q08	0.04
M5-DYD48	47.7	48-65	TPGH1103	M030W070	Q08	0.05
M7-DYD62	63.5	62-90	TPGH1603	M040W090	Q15	0.18
M7-DYD82	84	82-110	TPGH1603	M040W090	Q15	0.21
M9-DYD105	110	105-140	TPGH1603	M040W090	Q15	0.47
M9-DYD135	136	135-175	TPGH1603	M040W090	Q15	0.57

適用 Suitable:德克、京瓷或住友刀片 DEREK、KYOCERA Or SUMITOMO Insert

特 點 / Feature

■微調單位每格調整尺寸爲直徑0.02mm。　■Dial precision：0.02mm on diameter.

MKT

MKT Application
MKT的應用

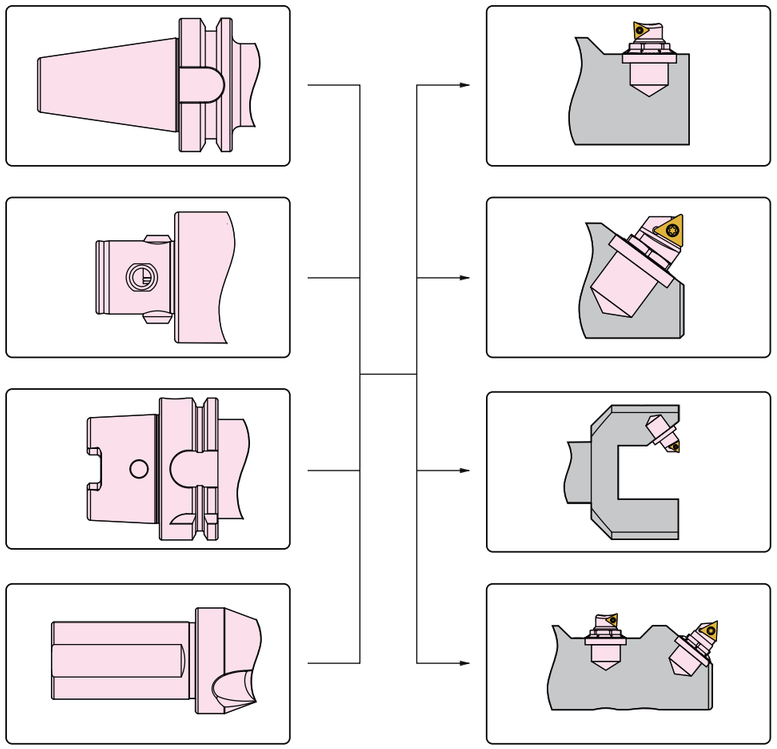

注 / Notice

■精鏜單元是安裝與精密加工的非標刀具本體。
■精鏜單元爲前端調節微調精度，每單元刻度爲直徑0.01mm。
■精鏜帶有自鎖功能，即調節刻度前無需解鎖，調節完成後也無需鎖緊。
■另有多款主偏角微調精鏜單元可接單生產。

注意事項：
禁止使用者將刀片座擰鬆至超出安全行程，
如果超出調整範圍，此精鏜單元即報廢無法修復。

■For non-standarrd tools;
■Dial precision 0.01mm on diameter;
■With self-lock design;
■Cartridge with different lead angle available on request.

Caution:
Cartridge shall be adjusted within suggested range,
or it will be broken and cannot be repaired.

MKT

MKT Boring Cartridge
MKT微調精密鏜頭微調器

NEW



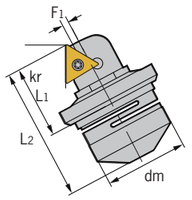

A

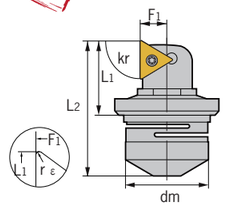

圖示爲右手型
Right Hand

B

型號 Specification		圖示 Fig	主偏角 Kr	dm	L_1	L_2	F_1	Dmin	刃傾角 λ	刀片型號 Insert	扳手 Wrench	重量 Weight
MKT1-	**90C06-L/R**	A	90	16	14.3	25.15	0.45	25.5	-3	CC**0602	WMKT06	0.03
	90T06-L/R	A	90	16	14.3	25.0	0.50	24.8	0	TC**06T1	WMKT06	0.03
	90T09-L/R	A	90	20	19.1	33.7	0.90	32.5	0	TC**0902	WMKT09	0.05
	90T11-L/R	A	90	22	23.0	45.3	1.10	42.0	0	TC**1103	WMKT11	0.18
	90T16-L/R	A	90	32	33.3	62.3	1.20	59.4	0	TC**16T3	WMKT16	0.21
MKT2-	**90C06-L/R**	B	90	16	13.3	24.1	5.10	27.0	-3	CC**0603	WMKT06	0.03
	90T09-L/R	B	90	20	18.3	32.9	6.30	36.5	0	TC**0902	WMKT09	0.05
	90T11-L/R	B	90	22	22.1	44.3	7.20	48.5	0	TC**1103	WMKT11	0.18
	90T16-L/R	B	90	32	32.0	62.7	10.3	68.4	0	TC**16T3	WMKT16	0.21

適用 Suitable:德克或京瓷刀片 DEREK Or KYOCERA Insert

MKT Boring Cartridge - Assembling Size
MKT精鏜單元的安裝尺寸

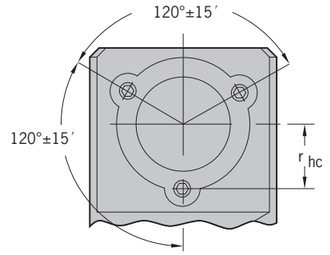

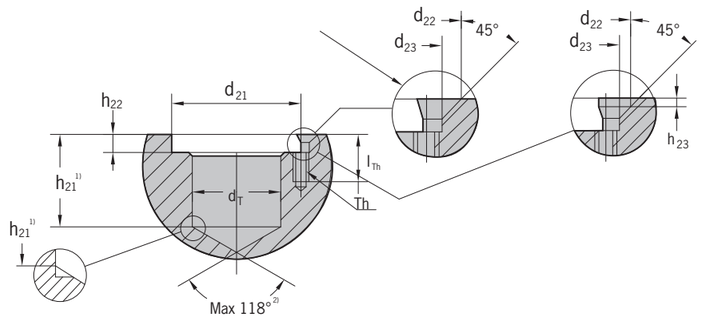

△	d_T H7	d_{21} 1)	d_{22} 1)	d_{23}	h_{21} 2)	h_{22} 3)	h_{23} 1)	l_{Th}	r_{hc}	T_h
06	16	19	4.6	3.2	11.5	2.8	1.6	9	9.65±0.02	M3
09	20	25	4.6	3.2	15.5	4.0	1.6	9	12.50±0.05	M3
11	22	30	6.5	4.3	24.0	5.0	1.8	13	15.40±0.05	M4
16	32	46	11.9	5.4	33.0	6.3	-	16	23.00±0.05	M5
06	16	19	4.6	3.2	11.5	2.8	1.6	9	9.65±0.02	M3

1) $^{+0.1}_{0}$　　2) $^{+0.2}_{0}$　　3)±0.2

MKT

MKT Boring Cartridge - Assembling Size
MKT精鏜單元的安裝尺寸

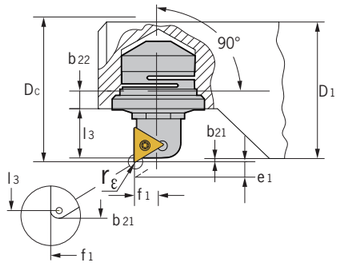

直角安裝
k_r = 90°

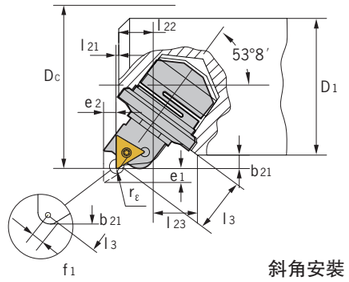

斜角安裝
k_r = 90°

進給方向	△	rε	D1 min	Dc min	b21 min	e1 max	e2 max	b22 min	l3 1) min	l21	l22	l23	f1
		0.2		27.9	0.60				9.8				
	06	0.4	26.0	27.6	0.55	2.5	-	3.60	9.6	-	-	-	5.10
		0.8		27.0	0.50				9.1				
		0.2		37.4	1.45				13.95				
	09	0.4	34.5	37.1	1.30	3.5	-	4.55	13.6	-	-	-	6.30
		0.8		36.5	1.00				12.9				
		0.2		49.4	1.45				16.75				
	11	0.4	46.5	49.1	1.30	6	-	7.75	16.4	-	-	-	7.20
		0.8		48.5	1.00				15.7				
		0.4		69.6	1.30				25.0				
	16	0.8	67.0	69.0	1.00	10	-	9.40	24.3	-	-	-	10.30
		1.2		68.4	0.70				23.6				
		0.2		26.2	1.70				11.0				0.40
	06	0.4	22.0	25.9	1.65	2	1.5	-	10.7	0.5	6.60	9.55	0.40
		0.8		25.3	1.60				10.1				0.45
		0.2		25.7	1.50				10.9				0.40
	06	0.4	22.0	25.4	1.45	2	1.5	-	10.6	0.5	6.60	9.55	0.40
		0.8		24.8	1.40				10.0				0.45
		0.2		33.4	2.45				14.9				0.95
	09	0.4	28.5	33.1	2.30	2.8	2.1	-	14.5	0.5	9.40	12.15	1.00
		0.8		32.5	2.00				13.7				1.10
		0.2		42.9	2.45				17.6				1.15
	11	0.4	38.0	42.6	2.30	4.8	3.6	-	17.2	0.5	11.20	14.85	1.20
		0.8		42.0	2.00				16.4				1.30
		0.4		60.6	2.80				26.2				1.30
	16	0.8	55.0	60.0	2.50	8	6.0	-	25.4	0.5	16.65	23.70	1.40
		1.2		59.4	2.20				24.6				1.50



直角安裝

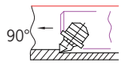

斜角安裝

適用 Suitable:德克或京瓷刀片 DEREK Or KYOCERA Insert

說明：

1）：完全夾緊在鏜刀卡內時的尺寸。

DBJ10/12/16

DBJ10/12/16 Micro-boring Head
DBJ10/12/16微調精密鏜頭

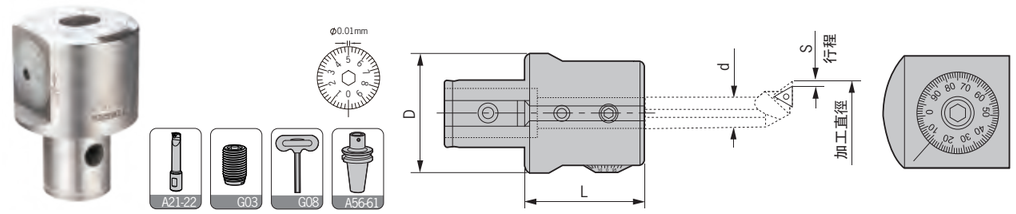

型號 Specification	D	d	L	微調行程 S Micro distance	微調精度(直徑) Dial precision	鏜孔範圍 Boring range	組合刀柄 Adapter size	微調鎖緊螺釘 Adjusting screw	刀杆固定螺釘 Locking screw	T型扳手 Wrench	重量 Weight
DBJ10	39	10	30	2.5	0.01	6-24	DCK4	M060U060-D	M060U050-D	T03	0.50
DBJ12	50	12	40	4	0.01	6-32	DCK5	M080U090-D	M080U060-D	T04	0.75
DBJ16	64	16	50	5	0.01	8-50	DCK6	M100U100-D	M100U140-D	T05	1.14

適用 Suitable:德克、京瓷或住友刀片 DEREK、KYOCERA Or SUMITOMO Insert

DBJ10Micro-boring Bar
DBJ10微調鏜頭刀杆

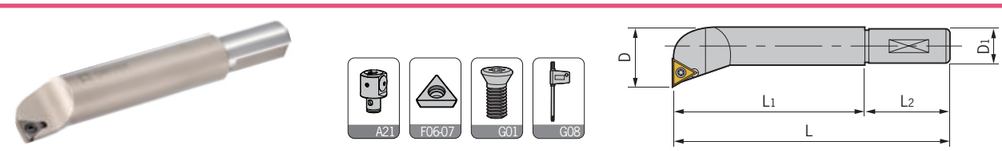

型號 Specification		D	D1	L1	L2	L	鏜孔範圍 Boring range	刀片型號 Insert	刀片螺釘 Insert screw	旗形扳手 Wrench	重量 Weight
DBJ	**1006-24**	6	10	24	32	56	6-8	WBGT0601L	M020W040	Q06	0.03
	1008-32	8	10	32	32	64	8-10	TBGH0601L	M020W040	Q06	0.04
	1010-40	10	10	40	32	72	10-12	TBGH0601L	M020W040	Q06	0.05
	1012-45	12	10	45	32	77	12-16	TPGH0902L	M025W060	Q08	0.06
	1016-45	16	10	45	32	77	16-20	TPGH0902L	M025W060	Q08	0.08
	1020-45	20	10	45	32	77	20-24	TPGH0902L	M025W060	Q08	0.11

適用 Suitable:德克、京瓷或住友刀片 DEREK、KYOCERA Or SUMITOMO Insert

DBJ12Micro-boring Bar
DBJ12微調鏜頭刀杆



型號 Specification		D	D1	L1	L2	L	鏜孔範圍 Boring range	刀片型號 Insert	刀片螺釘 Insert screw	旗形扳手 Wrench	重量 Weight
DBJ	**1206-24**	6	12	24	32	56	6-8	WBGT0601L	M020W040	Q06	0.03
	1208-32	8	12	32	32	64	8-10	TBGH0601L	M020W040	Q06	0.04
	1210-40	10	12	40	32	72	10-12	TBGH0601L	M020W040	Q06	0.05
	1212-45	12	12	45	32	77	12-16	TPGH0902L	M025W060	Q08	0.06
	1216-45	16	12	45	32	77	16-20	TPGH0902L	M025W060	Q08	0.09
	1220-45	20	12	45	32	77	20-25	TPGH0902L	M025W060	Q08	0.12
	1225-45	25	12	45	32	77	25-32	TPGH1103L	M030W070	Q08	0.16

適用 Suitable:德克、京瓷或住友刀片 DEREK、KYOCERA Or SUMITOMO Insert

DBJ16

DBJ16 Micro-boring Bar
DBJ16微調鏜頭刀杆





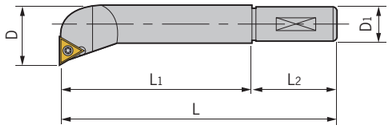

型號 Specification		D	D1	L1	L2	L	鏜孔範圍 Boring range	刀片型號 Insert	刀片螺釘 Insert screw	旗形扳手 Wrench	重量 Weight
DBJ	1608-32	8	16	32	32	64	8-11	TBGH0601L	M020W040	Q06	0.07
	1610-40	10	16	40	32	72	10-13	TBGH0601L	M020W040	Q06	0.07
	1612-53	12	16	53	32	85	12-17	TPGH0902L	M025W060	Q08	0.09
	1616-68	16	16	68	32	115	16-21	TPGH0902L	M025W060	Q08	0.13
	1620-83	20	16	83	32	118	20-26	TPGH1103L	M030W070	Q08	0.20
	1625-90	25	16	90	32	122	25-32	TPGH1103L	M030W070	Q08	0.25
	1630-90	30	16	90	32	122	30-42	TPGH1103L	M030W070	Q08	0.25
	1640-90	40	16	90	32	122	40-50	TPGH1103L	M030W070	Q08	0.26

適用 Suitable:德克、京瓷或住友刀片 DEREK、KYOCERA Or SUMITOMO Insert

DBJ Micro-boring Tool Kit
DBJ微調精鏜套裝組合

	型號 Specification			
（六支套裝）DBJ10-6PCS	DBJ1006-24	DBJ1010-40	DBJ1016-45	
	DBJ1008-32	DBJ1012-45	DBJ1020-45	

型號 Specification	鏜孔範圍 Boring range	組合刀柄 Adapter	重量 Weight
BT40-DBJ10-6PCS	6-24	BT40-DCK4-70	2.20
BT50-DBJ10-6PCS	6-24	BT50-DCK4-100	4.72

內附零件 Items Included

1.刀柄一把 One boring adapter
2.精密鏜頭一支 One micro boring head
3.精鏜刀杆六支Six micro boring bars
4.扳手三支 Three wrenches



	型號 Specification			
（七支套裝）DBJ12-7PCS	DBJ1206-24	DBJ1210-40	DBJ1216-45	DBJ1225-45
	DBJ1208-32	DBJ1212-45	DBJ1220-45	

型號 Specification	鏜孔範圍 Boring range	組合刀柄 Adapter	重量 Weight
BT40-DBJ12-7PCS	6-32	BT40-DCK5-60	2.40
BT50-DBJ12-7PCS	6-32	BT50-DCK5-90	4.94

內附零件 Items Included

1.刀柄一把 One boring adapter
2.精密鏜頭一支 One micro boring head
3.精鏜刀杆七支Seven micro boring bars
4.扳手三支 Three wrenches

	型號 Specification			
（八支套裝）DBJ16-8PCS	DBJ1608-32	DBJ1612-53	DBJ1620-83	DBJ1630-90
	DBJ1610-40	DBJ1616-68	DBJ1625-90	DBJ1640-90

型號 Specification	鏜孔範圍 Boring range	組合刀柄 Adapter	重量 Weight
BT40-DBJ16-8PCS	8-50	BT40-DCK6-55	3.68
BT50-DBJ16-8PCS	8-50	BT50-DCK6-85	6.74

內附零件 Items Included

1.刀柄一把 One boring adapter
2.精密鏜頭一支 One micro boring head
3.精鏜刀杆八支Eight micro boring bars
4.扳手三支 Three wrenches

DBJ/DT/DEB

DBJ Collet For Solid Carbide Boring Bar
DBJ鎢鋼刀杆專用筒夾

型號 Specification		D	d	L	組合鎢鋼刀杆 Boring holder
DBJ	10-6	10	6	26	CA06**
	10-8	10	8	26	DT08-M5-*
	12-8	12	8	32	DT08-M5-*
	12-10	12	10	32	DT10-M6-*
	16-8	16	8	38	DT08-M5-*
	16-10	16	10	38	DT10-M6-*
	16-12	16	12	38	DT12-M6-*



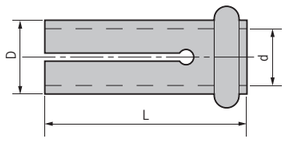

DT Solid Carbide Boring Holder
DT抗振鎢鋼刀杆



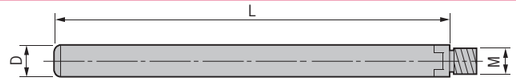

型號 Specification		D	L	M	組合鏜頭 Insert holder	組合筒夾 Collect	重量 Weight
DT	08-M5-115	8	115	M5	DEB09,DEB10.5	DBJ16-8	0.05
	10-M6-115	10	115	M6	DEB12	DBJ16-10	0.13
	10-M6-135	10	135	M6	DEB12	DBJ16-10	0.15
	10-M6-160	10	160	M6	DEB12	DBJ16-10	0.18
	12-M6-135	12	135	M6	DEB14,DEB16	DBJ16-12	0.20
	12-M6-165	12	165	M6	DEB14,DEB16	DBJ16-12	0.25
	16-M10-105	16	105	M10	DEB18,DEB20,DEB22,DEB24,DEB26,DEB28,	-	0.35
	16-M10-140	16	140	M10	DEB30,DEB32,DEB34,DEB36,DEB38,DEB40,	-	0.43
	16-M10-180	16	180	M10	DEB42,DEB44,DEB46,DEB48,DEB50	-	0.67

DEB Insert Holder
DEB拾弃式鏜頭





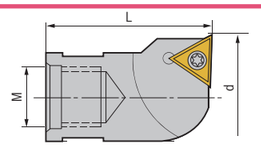

型號 Specification		d	L	M	鏜孔範圍 Boring range	刀片型號 Insert	刀片螺釘 Insert screw	旗形扳手 Wrench	重量 Weight
DEB	09	9	18	M5	9-10.5	TPGH080202	M022W050	Q06	0.03
	10.5	10.5	18	M5	10.5-12	TPGH080202	M022W050	Q06	0.03
	12	12	23	M6	12-14	TPGH080202	M022W050	Q06	0.03
	14	14	23	M6	14-16	TPGH080202	M022W050	Q06	0.03
	16	16	23	M6	16-18	TPGH080202	M022W050	Q06	0.04
	18	18	27	M10	18-20	TPGH080202	M022W050	Q06	0.04
	20	20	27	M10	20-22	TPGH080202	M022W050	Q06	0.05
	22	22	27	M10	22-24	TPGH080202	M022W050	Q06	0.05
	24	24	27	M10	24-26	TPGH080202	M022W050	Q06	0.05
	26	26	27	M10	26-28	TPGH080202	M022W050	Q06	0.05
	28	28	27	M10	28-30	TPGH080202	M022W050	Q06	0.06
	30	30	27	M10	30-32	TPGH080202	M022W050	Q06	0.06
	32	32	27	M10	32-34	TPGH080202	M022W050	Q06	0.07
	34	34	27	M10	34-36	TPGH080202	M022W050	Q06	0.09
	36	36	27	M10	36-38	TPGH080202	M022W050	Q06	0.11
	38	38	27	M10	38-40	TPGH080202	M022W050	Q06	0.15
	40	40	27	M10	40-42	TPGH080202	M022W050	Q06	0.16
	42	42	27	M10	42-44	TPGH080202	M022W050	Q06	0.19
	44	44	27	M10	44-46	TPGH080202	M022W050	Q06	0.22
	46	46	27	M10	46-48	TPGH080202	M022W050	Q06	0.26
	48	48	27	M10	48-50	TPGH080202	M022W050	Q06	0.30
	50	50	27	M10	50-52	TPGH080202	M022W050	Q06	0.34

適用 Suitable:德克、京瓷或住友刀片 DEREK、KYOCERA Or SUMITOMO Insert

NBH/DBJ

NBH2084 Micro-boring Head
NBH2084微調精密鏜頭





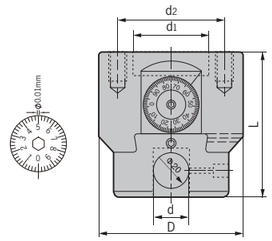

型號 Specification	D	d	d1	d2	L	鏜孔範圍 Boring range	微調行程 Micro distance	微調精度(直徑) Dial precision	組合刀柄 Adapter size	重量 Weight
NBH2084	84	20	35	60	80	8-280	28	0.01	NBH-A.B	2.74
						微調鎖緊螺釘 Adjusting screw	T型扳手 Wrench	刀杆固定螺釘 Locking screw	T型扳手 Wrench	
						M080U120-D	T04	M120U140-D	T06	

DBJ20 Micro-Boring Bar
DBJ20微調精密鏜頭刀杆



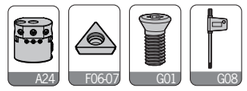

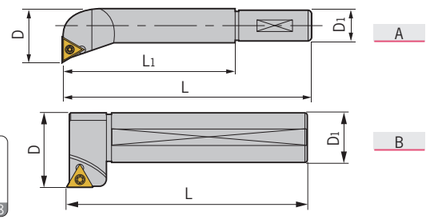

型號 Specification	圖示 Figure	D	D1	L1	L	鏜孔範圍 Boring range	刀片型號 Insert	刀片螺釘 Insert screw	旗形扳手 Wrench	重量 Weight
DBJ 2008-32	A	8	20	32	74	8-11	TBGH0601L	M020W040	Q06	0.09
2010-40	A	10	20	40	75	10-13	TBGH0601L	M020W040	Q06	0.10
2012-53	A	12	20	53	88	12-17	TPGH0902L	M025W060	Q08	0.12
2016-68	A	16	20	68	103	16-21	TPGH0902L	M025W060	Q08	0.16
2020-83	A	20	20	83	115	20-26	TPGH1103L	M030W070	Q08	0.22
2025-96	A	25	20	96	131	25-135	TPGH1103L	M030W070	Q08	0.35
2030-115	A	30	20	115	159	30-140	TPGH1103L	M030W070	Q08	0.52
20120-97	B	30	20	-	97	120-280	TPGH1103L	M030W070	Q08	0.25

適用 Suitable:德克、京瓷或住友刀片 DEREK、KYOCERA Or SUMITOMO Insert

NBH2084 Micro-Boring Tool Kit
NBH2084微調精鏜套裝組合

（八支套裝） DBJ20-8PCS	型號 Specification			
	DBJ2008-32	DBJ2012-53	DBJ2020-83	DBJ2030-115
	DBJ2010-40	DBJ2016-68	DBJ2025-96	DBJ20120-97

型號 Specification	鏜孔範圍 Boring range	組合刀柄 Adapter	重量 Weight
BT40-NBH2084-8PCS	8-280	BT40-NBH-A50	6.44
BT50-NBH2084-8PCS	8-280	BT50-NBH-A50	8.89



內附零件 Items

1.刀柄一把 One boring adapter
2.精密鏜頭一支 One micro boring head
3.精鏜刀杆八支 Eight micro boring bars
4.扳手四支 Four wrenches

ABH

ABH Twin-bit Rough Boring Body
ABH分體式粗鏜頭本體

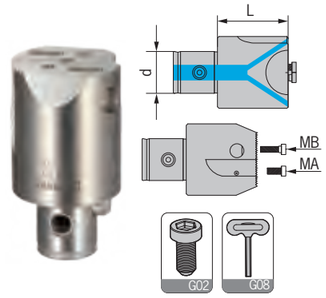

型号 Specification	d	L	刀片座鎖緊螺釘 MA	刀片座鎖緊螺釘 MB	L型扳手 Wrench	重量 Weight
ABH 25	14	40	-	E040U160-D	L03	0.16
32	18	48	E050U120-D	E050U200-D	L04	0.33
40	22	48	E060U120-D	E060U200-D	L05	0.49
50	28	60	E060U160-D	E060U250-D	L05	0.98
63	36	60	E080U160-D	E080U300-D	L06	1.60
80	36	60	E080U160-D	E080U300-D	L06	1.93

Inserts Holder For ABH Rough Boring Tool
ABH粗鏜頭刀座



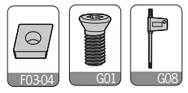

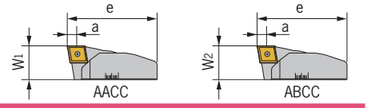

高刃刀座A Insert holder A	低刃刀座B Insert holder B	W_1	W_2	e	鏜孔量 a	鏜孔範圍 Boring range	組合鏜頭 Boring body	刀片 Insert	刀片螺釘 Insert screw	旗形扳手 Wrench	重量 Weight
AACC 2936	**ABCC 2936**	11.7	11.5	25	0.5-3	29-36	ABH25	CCMT0602	M025W060	Q08	0.01
3542	**3542**	11.7	11.5	30	0.5-3	35-42	ABH25	CCMT0602	M025W060	Q08	0.02
3645	**3645**	11.7	11.5	32	0.5-3	36-45	ABH32	CCMT0602	M025W060	Q08	0.02
4453	**4453**	11.7	11.5	38	0.5-3	44-53	ABH32	CCMT0602	M025W060	Q08	0.02
4556	**4556**	15.6	15.4	40	0.5-4	45-56	ABH40	CCMT09T3	M040S100-1	Q15	0.04
5566	**5566**	15.6	15.4	46.5	0.5-4	55-66	ABH40	CCMT09T3	M040S100-1	Q15	0.05
5674	**5674**	17.6	17.4	49	0.5-4	56-74	ABH50	CCMT09T3	M040S100-1	Q15	0.06
7492	**7492**	17.6	17.4	62	0.5-4	74-92	ABH50	CCMT09T3	M040S100-1	Q15	0.09
7090	**7090**	22.6	22.4	60	0.5-5	70-90	ABH63	CCMT1204	M050Y110-1	Q20	0.12
90110	**90110**	22.6	22.4	78	0.5-5	90-110	ABH63	CCMT1204	M050Y110-1	Q20	0.18
90130	**90130**	22.6	22.4	82	0.5-5	90-130	ABH80	CCMT1204	M050Y110-1	Q20	0.18
130170	**130170**	22.6	22.4	99.5	0.5-5	130-170	ABH80	CCMT1204	M050Y110-1	Q20	0.23

適用 Suitable:德克、三菱或日立刀片 DEREK、MITSUBISHI Or HITACHI Insert

Inserts Holder For ABH Rough Back-boring Tool
ABH反鏜式粗鏜頭刀座



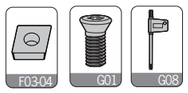

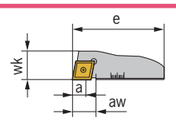

反鏜刀座K Insert holder K	aw	wk	e	a	鏜孔範圍 Boring range	組合鏜頭 Boring body	刀片 Insert	刀片螺釘 Insert screw	旗形扳手 Wrench	重量 Weight
AKCC 2936	4	11	25	0.5-3	29-36	ABH25	CCMT0602	M025W060	Q08	0.01
3542	7	11	30	0.5-3	35-42	ABH25	CCMT0602	M025W060	Q08	0.02
3645	5	11	32	0.5-3	36-45	ABH32	CCMT0602	M025W060	Q08	0.02
4453	9	11	38	0.5-3	44-53	ABH32	CCMT0602	M025W060	Q08	0.02
4556	5	15	40	0.5-4	45-56	ABH40	CCMT09T3	M040S100-1	Q15	0.04
5566	12	15	46.5	0.5-4	55-66	ABH40	CCMT09T3	M040S100-1	Q15	0.05
5674	11	17	49	0.5-4	56-74	ABH50	CCMT09T3	M040S100-1	Q15	0.07
7492	17	17	62	0.5-4	74-92	ABH50	CCMT09T3	M040S100-1	Q15	0.09
7090	12	21	60	0.5-5	70-90	ABH63	CCMT1204	M050Y110-1	Q20	0.13
90110	22	21	78	0.5-5	90-110	ABH63	CCMT1204	M050Y110-1	Q20	0.18
90130	24	21.5	82	0.5-5	90-130	ABH80	CCMT1204	M050Y110-1	Q20	0.18
130170	24	21.5	102.5	0.5-5	130-170	ABH80	CCMT1204	M050Y110-1	Q20	0.25

適用 Suitable:德克、三菱或日立刀片 DEREK、MITSUBISHI Or HITACHI Insert

ABH

ABH Rough Boring Tool
ABH分體式粗鏜頭



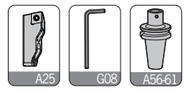

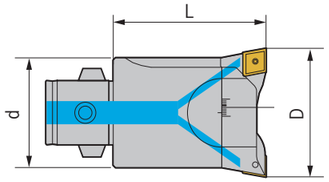

型號 Specification	d	L	鏜孔範圍D Boring range	組合刀柄 Adapter size	刀片座 Insert holder		重量 Weight
DCK2-ABH25-M	25	50	29-36	DCK2	AACC2936	ABCC2936	0.17
DCK2-ABH25-L	25	50	35-42	DCK2	AACC3542	ABCC3542	0.19
DCK3-ABH32-M	32	63	36-45	DCK3	AACC3645	ABCC3645	0.37
DCK3-ABH32-L	32	63	44-53	DCK3	AACC4453	ABCC4453	0.37
DCK4-ABH40-M	40	63	45-56	DCK4	AACC4556	ABCC4556	0.56
DCK4-ABH40-L	40	63	55-66	DCK4	AACC5566	ABCC5566	0.58
DCK5-ABH50-M	50	80	56-74	DCK5	AACC5674	ABCC5674	1.10
DCK5-ABH50-L	50	80	74-92	DCK5	AACC7492	ABCC7492	1.14
DCK6-ABH63-M	64	82	70-90	DCK6	AACC7090	ABCC7090	1.78
DCK6-ABH63-L	64	82	90-110	DCK6	AACC90110	ABCC90110	1.90
DCK6-ABH80-M	80	82	90-130	DCK6	AACC90130	ABCC90130	2.30
DCK6-ABH80-L	80	82	130-170	DCK6	AACC130170	ABCC130170	2.44

備注：使用錯齒式加工詳見A79頁“加工方法”
For stepped cutting, please refer to Page A79

ABH Rough Back-boring Tool
ABH反鏜式粗鏜頭



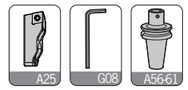

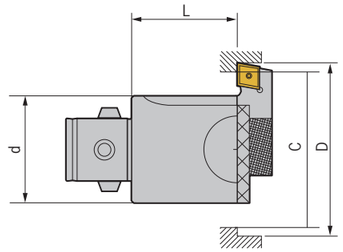



APR

型號 Specification	d	L	鏜孔範圍 Boring range	組合刀柄 Adapter size	刀片座 Insert holder	壓板 Clamp	重量 Weight
DCK2-ABH25-MF	25	41	29-36	DCK2	AKCC2936	**APR25**	0.17
DCK2-ABH25-LF	25	41	35-42	DCK2	AKCC3542	**APR25**	0.18
DCK3-ABH32-MF	32	49	36-45	DCK3	AKCC3645	**APR32**	0.36
DCK3-ABH32-LF	32	49	44-53	DCK3	AKCC4453	**APR32**	0.36
DCK4-ABH40-MF	40	49	45-56	DCK4	AKCC4556	**APR40**	0.54
DCK4-ABH40-LF	40	49	55-66	DCK4	AKCC5566	**APR40**	0.55
DCK5-ABH50-MF	50	61	56-74	DCK5	AKCC5674	**APR50**	1.07
DCK5-ABH50-LF	50	61	74-92	DCK5	AKCC7492	**APR50**	1.09
DCK6-ABH63-MF	64	61	70-90	DCK6	AKCC7090	**APR63**	1.74
DCK6-ABH63-LF	64	61	90-110	DCK6	AKCC90110	**APR63**	1.79
DCK6-ABH80-MF	80	61	90-130	DCK6	AKCC90130	**APR80**	2.23
DCK6-ABH80-LF	80	61	130-170	DCK6	AKCC130170	**APR80**	2.30

備注：選配反鏜頭需滿足：C>(D+d)/2

DBH

DBH Rough Boring Tool
DBH分體式粗鏜頭



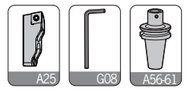

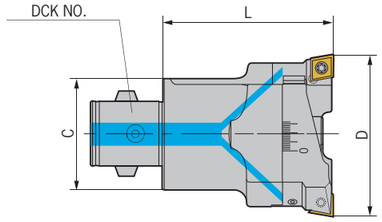

型號 Specification	C	L	鏜孔範圍D Boring range	組合刀柄 Adapter size	刀片座 Insert holder		重量 Weight
DCK2-DBH25-33-C	24	35.5	25-33	DCK2	DACC2533-C	DBCC2533-C	0.12
DCK3-DBH32-42-T	31	40	32-42	DCK3	DACC3242-T	DBCC3242-T	0.27
DCK3-DBH32-42-C	31	40	32-42	DCK3	DACC3242-C	DBCC3242-C	0.25
DCK4-DBH40-55-T	39	47	40-55	DCK4	DACC4055-T	DBCC4055-T	0.49
DCK4-DBH40-55-C	39	47	40-55	DCK4	DACC4055-C	DBCC4055-C	0.45
DCK5-DBH52-70-T	50	57	52-70	DCK5	DACC5270-T	DBCC5270-T	0.88
DCK5-DBH52-70-C	50	57	52-70	DCK5	DACC5270-C	DBCC5270-C	0.88
DCK6-DBH68-92-T	64	71	68-92	DCK6	DACC6892-T	DBCC6892-T	1.60
DCK6-DBH68-92-C	64	71	68-92	DCK6	DACC6892-C	DBCC6892-C	1.58
DCK6-DBH90-122-T	64	71	90-122	DCK6	DACC90122-T	DBCC90122-T	2.43
DCK6-DBH90-122-C	64	71	90-122	DCK6	DACC90122-C	DBCC90122-C	2.28
DCK7-DBH120-164-T	90	71	120-164	DCK7	DACC120164-T	DBCC120164-T	4.70
DCK7-DBH120-164-C	90	71	120-164	DCK7	DACC120164-C	DBCC120164-C	4.70
DCK7-DBH160-204-T	90	71	160-204	DCK7	DACC160204-T	DBCC160204-T	5.80
DCK7-DBH160-204-C	90	71	160-204	DCK7	DACC160204-C	DBCC160204-C	5.80

注: 舊款**BST-DBH120-164、BST-DBH160-204**兩款粗鏜頭參數詳見舊款樣本，舊款已停產，庫存售完即止。
Note: BST-DBH120-164 and BST-DBH160-204 updated to DCK7-DBH120-164 and DCK7-DBH160-204.

Inserts Holder For DBH Rough Boring Tool
DBH粗鏜頭刀座



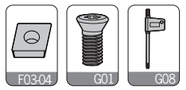

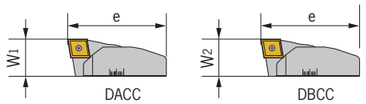

高刃刀座A Insert holder A	低刃刀座B Insert holder B	W_1	W_2	e	鏜孔範圍 Boring range	刀片 Insert	刀片螺釘 Insert screw	旗形扳手 Wrench	重量 Weight
DACC 2533-C	**DBCC 2533-C**	13.2	13.0	20.9	25-33	CCMT0602	M025W060	Q08	0.01
3242-C	**3242-C**	16.4	16.2	26.4	32-42	CCMT0602	M025W060	Q08	0.02
4055-C	**4055-C**	19.6	19.4	33.0	40-55	CCMT09T3	M040S100-1	Q15	0.04
5270-C	**5270-C**	22.6	22.4	44.4	52-70	CCMT09T3	M040S100-1	Q15	0.06
6892-C	**6892-C**	27.7	27.5	58.4	68-92	CCMT1204	M050Y110-1	Q20	0.09
90122-C	**90122-C**	25.7	25.5	72.9	90-122	CCMT1204	M050Y110-1	Q20	0.12
120164-C	**120164-C**	29.7	29.4	106.5	120-164	CCMT1204	M050Y110-1	Q20	0.18
160204-C	**160204-C**	29.7	29.4	120.5	160-204	CCMT1204	M050Y110-1	Q20	0.23
DACC 3242-T	**DBCC 3242-T**	16.4	16.2	26.4	32-42	TCMT1102	M025W060	Q08	0.02
4055-T	**4055-T**	19.4	19.2	33.0	40-55	TCMT1102	M025W060	Q08	0.04
5270-T	**5270-T**	22.6	22.4	44.2	52-70	TCMT16T3	M040S100-1	Q15	0.06
6892-T	**6892-T**	27.7	27.5	58.4	68-92	TCMT16T3	M040S100-1	Q15	0.09
90122-T	**90122-T**	25.7	25.5	72.9	90-122	TCMT2204	M050Y110-1	Q20	0.12
120164-T	**120164-T**	29.7	29.4	106.5	120-164	TCMT2204	M050Y110-1	Q20	0.18
160204-T	**160204-T**	29.7	29.4	120.5	160-204	TCMT2204	M050Y110-1	Q20	0.23

適用 Suitable:德克、三菱或日立刀片 DEREK、MITSUBISHI Or HITACHI Insert

DBH

DBH Large Diameter Rough Boring Tool
DBH大徑雙刃粗鏜頭



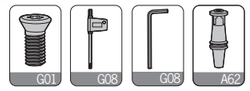

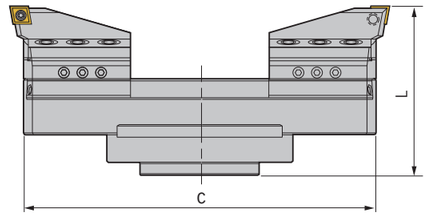

鏜孔範圍Φ200-Φ910mm組合系列 Boring Range From Φ200-Φ910mm

型號 Specification		C	L	鏜孔範圍 Boring range	組合刀柄 Adapter size	適配刀片座 Insert holder	反鏜範圍 B-Boring range	反鏜深度 Work depth	調整螺釘 Adjusting screw	L型扳手 Wrench	重量 Weight
BST-	**DBH200310**	180	130	200-310	BST	DB200-C12 DB200-T16 DB200-T22 DB200-S12	-	55	M060U500-D	L03	11.40
	DBH300410	280	130	300-410	BST		0-93	55	M060U500-D	L03	13.45
	DBH400510	380	130	400-510	BST		93-193	55	M060U500-D	L03	15.60
	DBH500610	480	130	500-610	BST		193-293	55	M060U500-D	L03	17.71
	DBH600710	580	130	600-710	BST		293-393	55	M060U500-D	L03	19.83
	DBH700810	680	130	700-810	BST		393-493	55	M060U500-D	L03	21.95
	DBH800910	780	130	800-910	BST		493-593	55	M060U500-D	L03	24.07

產品/配件 Item	型號 Specification	圖示 Picture	刀片螺釘 Insert screw	旗形扳手 Wrench	重量 Weight
組合刀柄 Adapter size	**HSK-BST**				-
	BT-BST				-
	SK-BST				-
連接盤 Flange	**BST-FL200**				2.70
橫向滑板 Extension bridge	**DST200**				3.40/1.20(鋁材Al.)
	DST300				5.40/1.85(鋁材Al.)
	DST400				7.40/2.50(鋁材Al.)
	DST500				9.40/3.15(鋁材Al.)
	DST600				11.40/3.80(鋁材Al.)
	DST700				13.40/4.45(鋁材Al.)
	DST800				15.40/5.10(鋁材Al.)
平衡滑塊 Balance weight	**DS200**				0.98
刀片座墊片 Shim	**DS201**				0.05
刀片座及通用刀片 Insert holder/Insert	**DB200-C12** **CCMT1204**		M050Y110-1	Q20	0.68
	DB200-T16 **TCMT16T3**		M040S100-1	Q15	
	DB200-T22 **TCMT2204**		M050Y110-1	Q20	
	DB200-S12 **SCMT1204**		M050Y110-1	Q20	

BSA

BSA 45° Boring Holder With Square Boring Bit
BSA45度粗鏜孔刀柄



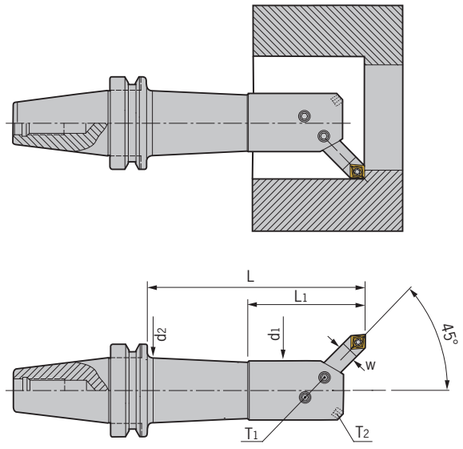

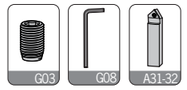

型號 Specification		d1	d2	L1	L	鏜孔範圍 Boring range	W	鎖緊螺釘 T1		鎖緊螺釘 T2	重量 Weight
BT40-	BSA25-120	20	22	35	90	25-38	8	M060U060-D	-	-	1.19
	BSA30-150	24	26	40	120	30-42	8	M060U080-D	M060U100-D	-	1.40
	BSA38-165	30	33	50	135	38-52	10	M080U100-D	M080U120-D	-	1.70
	BSA42-165	34	37	50	135	42-56	10	M080U100-D	M080U120-D	-	1.91
	BSA42-210	34	37	50	180	42-56	10	M080U100-D	M080U120-D	-	2.24
	BSA50-165	40	44	65	135	50-65	13	M080U100-D	M080U120-D	M080U160-D	2.24
	BSA62-180	50	56	80	150	62-90	16	M100U120-D	M100U160-D	M100U200-D	3.20
	BSA72-180	60	-	95	150	72-110	19	M100U120-D	M100U200-D	M100U250-D	3.93
	BSA90-180	75	-	-	150	90-125	19	M120U200-D	M120U300-D	-	5.13
BT50-	BSA25-135	20	22	35	92	25-38	8	M060U060-D	-	-	3.90
	BSA30-165	24	26	40	122	30-42	8	M060U080-D	M060U100-D	-	4.07
	BSA38-180	30	33	50	137	38-52	10	M080U100-D	M080U120-D	-	4.39
	BSA42-210	34	37	60	167	42-56	10	M080U100-D	M080U120-D	-	4.86
	BSA50-180	40	44	65	137	50-65	13	M080U100-D	M080U120-D	M080U160-D	5.00
	BSA50-240	40	44	65	197	50-65	13	M080U100-D	M080U120-D	M080U160-D	5.59
	BSA62-195	50	56	80	152	62-90	16	M100U120-D	M100U160-D	M100U200-D	5.93
	BSA62-270	50	56	80	227	62-90	16	M100U120-D	M100U160-D	M100U200-D	6.63
	BSA72-195	60	66	95	152	72-110	19	M100U120-D	M100U200-D	M100U250-D	6.18
	BSA72-285	60	66	95	242	72-110	19	M100U120-D	M100U200-D	M100U250-D	8.92
	BSA90-210	75	80	110	267	90-125	19	M120U200-D	M120U300-D	-	8.88
	BSA90-300	75	80	110	257	90-125	19	M120U200-D	M120U300-D	-	12.14
	BSA105-195	90	-	-	152	105-160	25	M120U200-D	M120U300-D	-	10.60
	BSA105-285	90	94	130	242	105-160	25	M120U200-D	M120U300-D	-	14.00

注：刀夾需單獨訂購。
Notice: Square boring bit shall be ordered separately.

特點 / Feature

■可選用四角形熔焊刀具或捨弃式刀具。
■鏜盲孔專用。

■Can be with 4-corner welded cutter or indexable cutting tools.
■Special for blind holes.

BSB

BSB 90° Boring Holder With Square Boring Bit
BSB90度粗鏜孔刀柄



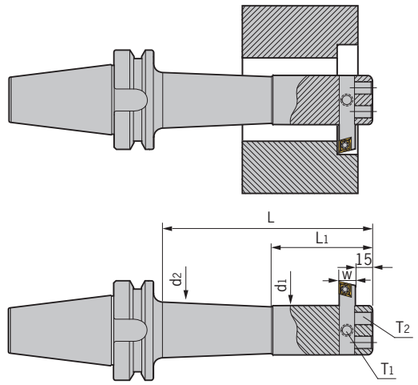

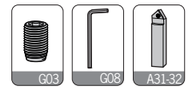

型號 Specification		d1	d2	L1	L	鏜孔範圍 Boring range	W	鎖緊螺釘 T1	鎖緊螺釘 T2	重量 Weight
BT40-	BSB25-120	20	22	35	90	25-52	8	M060U060-D	M060U120-D	1.21
	BSB38-150	30	33	55	120	38-70	10	M080U100-D	M080U120-D	1.73
	BSB50-165	40	44	70	135	50-90	13	M100U120-D	M100U120-D	2.45
	BSB62-180	50	56	80	150	62-115	16	M100U120-D	M100U160-D	3.56
	BSB90-180	75	-	-	150	90-150	19	M120U120-D	M120U250-D	6.30
BT50-	BSB25-135	20	22	35	92	25-52	8	M060U060-D	M060U120-D	3.95
	BSB38-180	30	33	55	137	38-70	10	M080U100-D	M080U120-D	4.51
	BSB50-180	40	44	70	137	50-90	13	M100U120-D	M100U120-D	5.21
	BSB50-240	40	44	70	197	50-90	13	M100U120-D	M100U120-D	5.82
	BSB62-195	50	56	80	152	62-115	16	M100U120-D	M100U160-D	6.33
	BSB62-270	50	56	80	227	62-115	16	M100U120-D	M100U160-D	7.61
	BSB72-195	60	66	95	152	72-135	19	M120U120-D	M120U200-D	7.40
	BSB72-285	60	66	95	242	72-135	19	M120U120-D	M120U200-D	9.37
	BSB90-210	75	80	115	167	90-150	19	M120U120-D	M120U250-D	9.97
	BSB90-300	75	80	115	257	90-150	19	M120U120-D	M120U250-D	13.24
	BSB105-195	90	-	-	152	105-190	25	M120U120-D	M120U300-D	11.66
	BSB105-285	90	94	135	242	105-190	25	M120U120-D	M120U300-D	16.29

注：刀夾需單獨訂購。
Notice: Square boring bit shall be ordered separately.

特點 / Feature

■適用于孔徑凹凸不平，毛坯粗糙之加工物。
■適用通孔，背鏜加工。

■For work piece with a rough surface.
■Special for through holes.

TBS

TBS Square Boring Bit
TBS捨弃式鏜孔刀杆



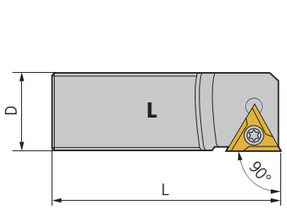

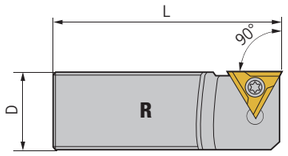

T90度刀杆適用于BSB刀柄 For BSB Boring Holder

型號 Specification		D	L	鏜孔範圍 Boring range	刀片 Insert	刀片螺釘 Insert screw	旗形扳手 Wrench	重量 Weight
TBS	**910-36-L/R**	10	36	38-50	TPGH0902	M025W060	Q08	0.05
	910-45-L/R	10	45	50-70	TPGH0902	M025W060	Q08	0.05
	913-48-L/R	13	48	50-70	TPGH1103	M030W070	Q08	0.08
	913-65-L/R	13	65	70-90	TPGH1103	M030W070	Q08	0.10
	916-60-L/R	16	60	62-90	TPGH1103	M030W070	Q08	0.15
	916-80-L/R	16	80	90-115	TPGH1103	M030W070	Q08	0.20
	919-70-L/R	19	70	72-105	TPGH1603	M035D080-2	Q15	0.22
	919-85-L/R	19	85	90-115	TPGH1603	M035D080-2	Q15	0.25
	919-90-L/R	19	90	105-135	TPGH1603	M035D080-2	Q15	0.27
	919-105-L/R	19	105	115-150	TPGH1603	M035D080-2	Q15	0.30
	925-100-L/R	25	100	105-140	TPGH1603	M035D080-2	Q15	0.50
	925-135-L/R	25	130	140-190	TPGH1603	M035D080-2	Q15	0.65

適用 Suitable:德克、京瓷或住友刀片 DEREK、KYOCERA Or SUMITOMO Insert

備注：R爲右手刀背鏜專用R:Special for back boring



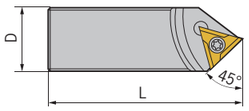

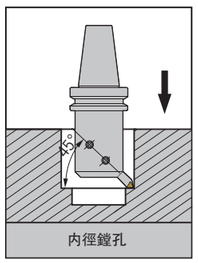

T45度刀杆適用于BSA刀柄 For BSA Boring Holder

型號 Specification		D	L	鏜孔範圍 Boring range	刀片 Insert	刀片螺釘 Insert screw	旗形扳手 Wrench	重量 Weight
TBS	**410-45**	10	45	38-52	TPGH0902	M025W060	Q08	0.05
	410-50	10	50	42-56	TPGH0902	M025W060	Q08	0.05
	413-60	13	60	50-65	TPGH1103	M030W070	Q08	0.10
	416-75	16	75	62-90	TPGH1103	M030W070	Q08	0.15
	419-90	19	90	72-110	TPGH1603	M035D080-2	Q15	0.25
	419-115	19	115	90-125	TPGH1603	M035D080-2	Q15	0.35
	425-130	25	130	105-160	TPGH1603	M035D080-2	Q15	0.65

適用 Suitable:德克、京瓷或住友刀片 DEREK、KYOCERA Or SUMITOMO Insert

特 點 / Feature

■TBS適合粗加工及中切削加工。 ■For roughing and medium-heavy cutting.

CBS

CBS Square Boring Bit
CBS捨弃式鏜孔刀杆



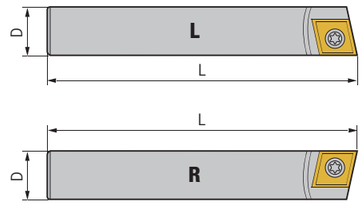

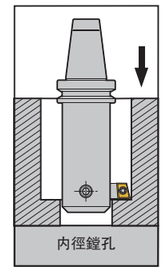

C90度刀杆適用于BSB刀柄 For BSB Boring Holder

型號 Specification		D	L	鏜孔範圍 Boring range	刀片 Insert	刀片螺釘 Insert screw	旗形扳手 Wrench	重量 Weight
CBS	**908-23-L/R**	8	23	25-38	CCMT0602	M025W060	Q08	0.05
	908-30-L/R	8	30	38-52	CCMT0602	M025W060	Q08	0.06
	910-36-L/R	10	36	38-50	CCMT0602	M025W060	Q08	0.07
	910-45-L/R	10	45	50-70	CCMT0602	M025W060	Q08	0.08
	913-48-L/R	13	48	50-70	CCMT09T3	M035D080-2	Q15	0.10
	913-65-L/R	13	65	70-90	CCMT09T3	M035D080-2	Q15	0.12
	916-60-L/R	16	60	62-90	CCMT09T3	M035D080-2	Q15	0.15
	916-80-L/R	16	80	90-115	CCMT09T3	M035D080-2	Q15	0.17
	919-70-L/R	19	70	72-105	CCMT1204	M050Y110-1	Q20	0.20
	919-85-L/R	19	85	90-115	CCMT1204	M050Y110-1	Q20	0.28
	919-90-L/R	19	90	105-135	CCMT1204	M050Y110-1	Q20	0.25
	919-105-L/R	19	105	115-150	CCMT1204	M050Y110-1	Q20	0.30
	925-100-L/R	25	100	105-140	CCMT1204	M050Y110-1	Q20	0.50
	925-135-L/R	25	135	140-190	CCMT1204	M050Y110-1	Q20	0.65

適用 Suitable:德克、三菱或日立刀片 DEREK、MITSUBISHI Or HITACHI Insert

備注：R爲右手刀背鏜專用R:Special for back boring



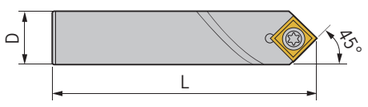

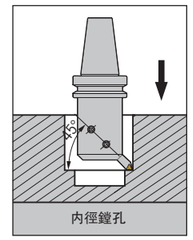

C45度刀杆適用于BSA刀柄 For BSA Boring Holder

型號 Specification		D	L	鏜孔範圍 Boring range	刀片 Insert	刀片螺釘 Insert screw	旗形扳手 Wrench	重量 Weight
CBS	**408-30**	8	30	25-38	CCMT0602	M025W060	Q08	0.05
	408-35	8	35	30-42	CCMT0602	M025W060	Q08	0.06
	410-45	10	45	38-52	CCMT0602	M025W060	Q08	0.07
	410-50	10	50	42-56	CCMT0602	M025W060	Q08	0.08
	413-60	13	60	50-65	CCMT09T3	M035D080-2	Q15	0.10
	416-75	16	75	62-90	CCMT09T3	M035D080-2	Q15	0.20
	419-90	19	90	72-110	CCMT1204	M050Y110-1	Q20	0.25
	419-115	19	115	90-125	CCMT1204	M050Y110-1	Q20	0.30
	425-130	25	130	105-160	CCMT1204	M050Y110-1	Q20	0.60

適用 Suitable:德克、三菱或日立刀片 DEREK、MITSUBISHI Or HITACHI Insert

特 點 / Feature

■CBS適合重切削加工。 ■For heavy cutting.

SFC/SLC/SSC

Inserts Holder SFC For Roughing
SFC粗鏜刀座



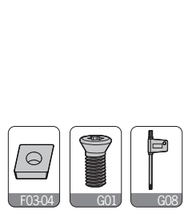

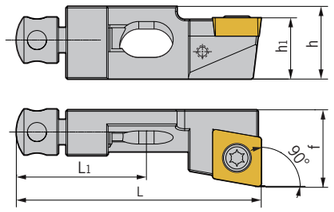

型號 Specification	D	h1	h	f	L1	L	刀片 Insert	刀片螺釘 Insert screw	調整螺釘 Adjusting screw	扳手 Wrench	重量 Weight
SCFCR/L08CA-06	25	8	10	10	17	32	CC**060204	M025W060	M040H120	Q08	0.07
STFCR/L08CA-09	25	8	10	10	17	32	TC**090204	M025W060	M040H120	Q08	0.07
STFCR/L10CA-11	40	10	15	14	20	50	TC**110204	M025W060	M040H120	Q08	0.10
SCFCR/L10CA-09	40	10	15	14	20	50	CC**09T308	M035W080	M050H140	Q15	0.10

適用 Suitable:德克、三菱或日立刀片 DEREK、MITSUBISHI Or HITACHI Insert

Inserts Holder SLC For Roughing
SLC粗鏜刀座





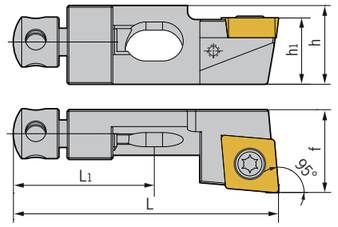

型號 Specification	D	h1	h	f	L1	L	刀片 Insert	刀片螺釘 Insert screw	調整螺釘 Adjusting screw	扳手 Wrench	重量 Weight
SCLCR/L08CA-06	25	8	10	10	17	32	CC**060204	M025W060	M040H120	Q08	0.07
SCLCR/L10CA-09	40	10	15	14	20	50	CC**09T308	M035W080	M050H140	Q15	0.10

適用 Suitable:德克、三菱或日立刀片 DEREK、MITSUBISHI Or HITACHI Insert

Inserts Holder SSC For Roughing
SSC粗鏜刀座



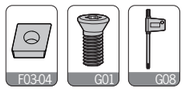

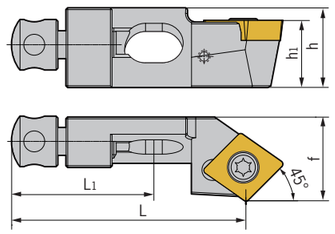

型號 Specification	D	h1	h	f	L1	L	刀片 Insert	刀片螺釘 Insert screw	調整螺釘 Adjusting screw	扳手 Wrench	重量 Weight
SCSCR/L08CA-06	25	8	10	10	17	32	CC**060204	M025W060	M040H120	Q08	0.07
STSCR/L10CA-11	40	10	15	14	20	44	TC**110204	M025W060	M040H120	Q08	0.09
SCSCR/L10CA-09	40	10	15	14	20	44	CC**09T308	M035W080	M050H140	Q15	0.09
STSCR/L12CA-16	50	12	20	20	20	47	TC**16T308	M035W080	M050H140	Q15	0.15

適用 Suitable:德克、三菱或日立刀片 DEREK、MITSUBISHI Or HITACHI Insert

SB

SB Twin-Bit Rough Boring Tool With Straight Shank
SB雙刃粗鏜刀杆





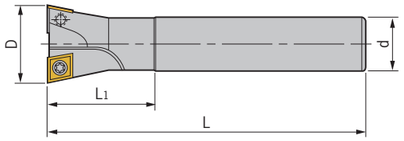

型號 Specification	刃數 Teeth	D	d	L1	L	刀片 Insert	刀片螺釘 Insert screw	旗形扳手 Wrench
SB- C16-TB16-110	2	15.8	16	60	110	CCMT060204	M025W060	Q08
C16-TB16-135	2	15.8	16	85	135	CCMT060204	M025W060	Q08
C16-TB17-110	2	16.8	16	40	110	CCMT060204	M025W060	Q08
C16-TB17-135	2	16.8	16	40	135	CCMT060204	M025W060	Q08
C16-TB18-110	2	17.8	16	40	110	CCMT060204	M025W060	Q08
C16-TB18-135	2	17.8	16	40	135	CCMT060204	M025W060	Q08
C16-TB19-110	2	18.8	16	40	110	CCMT060204	M025W060	Q08
C16-TB19-160	2	18.8	16	40	160	CCMT060204	M025W060	Q08
C16-TB20-110	2	19.8	16	40	110	CCMT060204	M025W060	Q08
C16-TB20-160	2	19.8	16	40	160	CCMT060204	M025W060	Q08
C20-TB21-120	2	20.8	20	40	120	CCMT060204	M025W060	Q08
C20-TB21-160	2	20.8	20	40	160	CCMT060204	M025W060	Q08
C20-TB22-120	2	21.8	20	40	120	CCMT060204	M025W060	Q08
C20-TB22-160	2	21.8	20	40	160	CCMT060204	M025W060	Q08
C20-TB23-120	2	22.8	20	40	120	CCMT060204	M025W060	Q08
C20-TB23-180	2	22.8	20	40	180	CCMT060204	M025W060	Q08
C20-TB24-120	2	23.8	20	40	120	CCMT060204	M025W060	Q08
C20-TB24-180	2	23.8	20	40	180	CCMT060204	M025W060	Q08
C20-TB25-120	2	24.8	20	40	120	CCMT060204	M025W060	Q08
C25-TB25-160	2	24.8	20	90	160	CCMT060204	M025W060	Q08
C20-TB25-190	2	24.8	20	40	190	CCMT060204	M025W060	Q08
C20-TB26-120	2	25.8	20	40	120	CCMT060204	M025W060	Q08
C20-TB26-190	2	25.8	20	40	190	CCMT060204	M025W060	Q08
C20-TB27-120	2	26.8	20	40	120	CCMT060204	M025W060	Q08
C20-TB27-190	2	26.8	20	40	190	CCMT060204	M025W060	Q08
C20-TB28-120	2	27.8	20	40	120	CCMT09T308	M040S100-1	Q15
C20-TB28-190	2	27.8	20	40	190	CCMT09T308	M040S100-1	Q15
C25-TB30-160	2	29.8	25	50	160	CCMT09T308	M040S100-1	Q15
C25-TB30-190	2	29.8	25	50	190	CCMT09T308	M040S100-1	Q15
C25-TB32-160	2	31.8	25	50	160	CCMT09T308	M040S100-1	Q15
C25-TB32-210	2	31.8	25	50	210	CCMT09T308	M040S100-1	Q15
C25-TB35-160	2	34.8	25	50	160	CCMT09T308	M040S100-1	Q15
C25-TB35-230	2	34.8	25	50	230	CCMT09T308	M040S100-1	Q15
C25-TB37-160	2	36.8	25	50	160	CCMT09T308	M040S100-1	Q15
C25-TB37-250	2	36.8	25	50	250	CCMT09T308	M040S100-1	Q15
C25-TB40-160	2	39.8	25	50	160	CCMT09T308	M040S100-1	Q15
C32-TB40-250	2	39.8	32	50	250	CCMT09T308	M040S100-1	Q15
C32-TB42-200	2	41.8	32	50	200	CCMT09T308	M040S100-1	Q15
C32-TB42-250	2	41.8	32	50	250	CCMT09T308	M040S100-1	Q15
C32-TB45-200	2	44.8	32	50	200	CCMT09T308	M040S100-1	Q15
C32-TB45-310	2	44.8	32	50	310	CCMT09T308	M040S100-1	Q15
C32-TB47-200	2	46.8	32	50	200	CCMT09T308	M040S100-1	Q15
C32-TB47-260	2	46.8	32	50	260	CCMT09T308	M040S100-1	Q15
C32-TB50-200	2	49.8	32	50	200	CCMT09T308	M040S100-1	Q15
C32-TB50-310	2	49.8	32	50	310	CCMT09T308	M040S100-1	Q15

適用 Suitable:德克、三菱或日立刀片 DEREK、MITSUBISHI Or HITACHI Insert

MC

MC Face Boring Head
MC固定式雙刃粗鏜頭



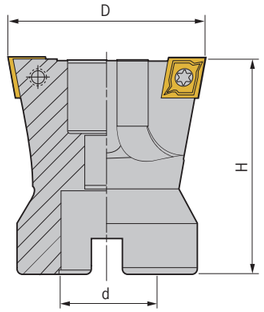



型號 Specification	刃數 Teeth	D	d	H	刀片 Insert	刀片螺釘 Insert screw	旗形扳手 Wrench	重量 Weight
MC 22-45	2	44.8	22	50	CCMT09T308	M040S100-1	Q15	0.25
22-50	2	49.8	22	50	CCMT09T308	M040S100-1	Q15	0.30
22-55	2	54.8	22	50	CCMT09T308	M040S100-1	Q15	0.35
22-60	2	59.8	22	50	CCMT09T308	M040S100-1	Q15	0.47
27-65	2	64.8	27	50	CCMT09T308	M040S100-1	Q15	0.60
27-70	2	69.8	27	50	CCMT09T308	M040S100-1	Q15	0.78
27-75	2	74.8	27	50	CCMT09T308	M040S100-1	Q15	0.86
27-80	2	79.8	27	50	CCMT09T308	M040S100-1	Q15	0.94
27-85	2	84.8	27	50	CCMT09T308	M040S100-1	Q15	1.08
27-90	2	89.8	27	50	CCMT09T308	M040S100-1	Q15	1.10
27-95	2	94.8	27	50	CCMT09T308	M040S100-1	Q15	1.16
27-100	2	99.8	27	50	CCMT09T308	M040S100-1	Q15	1.20
32-105	2	104.8	32	63	CCMT09T308	M040S100-1	Q15	1.84
32-110	2	109.8	32	63	CCMT09T308	M040S100-1	Q15	2.13
32-115	2	114.8	32	63	CCMT09T308	M040S100-1	Q15	2.22
32-120	2	119.8	32	63	CCMT09T308	M040S100-1	Q15	2.28
32-125	2	124.8	32	63	CCMT09T308	M040S100-1	Q15	1.72
32-130	2	129.8	32	63	CCMT09T308	M040S100-1	Q15	2.42

適用 Suitable:德克、三菱或日立刀片 DEREK、MITSUBISHI Or HITACHI Insert

KSD-W

KSD-W Indexable Insert Drill (3xD)
KSD-W捨弃式快速鑽頭（3倍長）



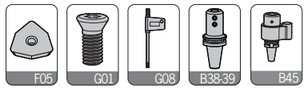

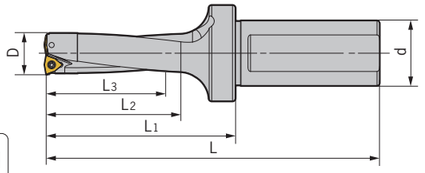

型號 Specification	刃數 Teeth	D	d	L1	L2	L3	L	刀片 Insert	刀片螺釘 Insert screw	旗形扳手 Wrench	重量 Weight
KSD- C25-15-127-W	2	15	25	71	50	45	127	WCMX030208	M025W050	Q08B	0.32
C25-15.5-127-W	2	15.5	25	71	50	45	127	WCMX030208	M025W050	Q08B	0.32
C25-16-130-W	2	16	25	74	53	48	130	WCMX030208	M025W050	Q08B	0.33
C25-16.5-130-W	2	16.5	25	74	53	48	130	WCMX030208	M025W050	Q08B	0.34
C25-17-133-W	2	17	25	77	56	51	133	WCMX030208	M025W060	Q08B	0.34
C25-17.5-133-W	2	17.5	25	77	56	51	133	WCMX030208	M025W060	Q08B	0.35
C25-18-137-W	2	18	25	81	59	54	137	WCMX030208	M025W060	Q08B	0.36
C25-18.5-137-W	2	18.5	25	81	59	54	137	WCMX030208	M025W060	Q08B	0.36
C25-19-140-W	2	19	25	84	62	57	140	WCMX030208	M025W060	Q08B	0.37
C25-19.5-140-W	2	19.5	25	84	62	57	140	WCMX030208	M025W060	Q08B	0.37
C32-20-145-W	2	20	32	85	66	60	145	WCMX040208	M025W060	Q08B	0.57
C32-20.5-145-W	2	20.5	32	85	66	60	145	WCMX040208	M025W060	Q08B	0.57
C32-21-148-W	2	21	32	88	67	63	148	WCMX040208	M025W060	Q08B	0.58
C32-21.5-148-W	2	21.5	32	88	68	63	148	WCMX040208	M025W060	Q08B	0.58
C32-22-151-W	2	22	32	91	71	66	151	WCMX040208	M025W060	Q08B	0.59
C32-22.5-151-W	2	22.5	32	91	71	66	151	WCMX040208	M025W060	Q08B	0.59
C32-23-155-W	2	23	32	95	74	69	155	WCMX040208	M025W060	Q08B	0.61
C32-23.5-155-W	2	23.5	32	95	74	69	155	WCMX040208	M025W060	Q08B	0.62
C32-24-159-W	2	24	32	99	78	72	159	WCMX040208	M025W060	Q08B	0.64
C32-24.5-159-W	2	24.5	32	99	78	72	159	WCMX040208	M025W060	Q08B	0.65
C32-25-163-W	2	25	32	103	81	75	163	WCMX050308	M030W070	Q08B	0.66
C32-25.5-163-W	2	25.5	32	103	81	75	163	WCMX050308	M030W070	Q08B	0.66
C32-26-170-W	2	26	32	110	83	78	170	WCMX050308	M030W070	Q08B	0.70
C32-26.5-170-W	2	26.5	32	110	84	78	170	WCMX050308	M030W070	Q08B	0.70
C32-27-173-W	2	27	32	113	86	81	173	WCMX050308	M030W070	Q08B	0.71
C32-28-177-W	2	28	32	117	89	84	177	WCMX050308	M030W070	Q08B	0.75
C32-29-180-W	2	29	32	120	92	87	180	WCMX050308	M030W070	Q08B	0.77
C32-30-185-W	2	30	32	125	96	90	185	WCMX050308	M030W070	Q08B	0.81
C32-31-189-W	2	31	32	129	99	93	189	WCMT06T308	M035W090	Q15B	0.84
C32-32-192-W	2	32	32	132	102	96	192	WCMT06T308	M035W090	Q15B	0.88
C32-33-196-W	2	33	32	136	105	99	196	WCMT06T308	M035W090	Q15B	0.93
C32-34-199-W	2	34	32	139	108	102	199	WCMT06T308	M035W090	Q15B	0.96
C32-35-203-W	2	35	32	143	111	105	203	WCMT06T308	M035W090	Q15B	0.97
C32-36-203-W	2	36	32	143	111	108	203	WCMT06T308	M035W090	Q15B	1.06
C32-37-210-W	2	37	32	150	117	111	210	WCMT06T308	M035W090	Q15B	1.06
C32-38-214-W	2	38	32	154	120	114	214	WCMT06T308	M035W090	Q15B	1.06
C32-39-217-W	2	39	32	157	123	117	217	WCMT06T308	M035W090	Q15B	1.17

適用 Suitable:德克或住友刀片 DEREK Or SUMITOMO Insert

KSD-W

KSD-W Indexable Insert Drill (3xD)
KSD-W捨弃式快速鑽頭（3倍長）



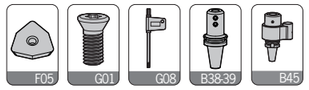

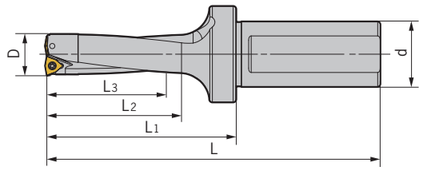

型號 Specification		刃數 Teeth	D	d	L1	L2	L3	L	刀片 Insert	刀片螺釘 Insert screw	旗形扳手 Wrench	重量 Weight
KSD-	C40-40-231-W	2	40	40	161	126	120	231	WCMT080412	M040W090	Q15B	1.66
	C40-41-235-W	2	41	40	165	129	123	235	WCMT080412	M040W090	Q15B	1.66
	C40-42-238-W	2	42	40	168	132	126	238	WCMT080412	M040W090	Q15B	1.70
	C40-43-241-W	2	43	40	171	135	129	241	WCMT080412	M040W090	Q15B	1.77
	C40-44-245-W	2	44	40	175	138	132	245	WCMT080412	M040W090	Q15B	1.81
	C40-45-248-W	2	45	40	178	141	135	248	WCMT080412	M040W090	Q15B	1.81
	C40-46-252-W	2	46	40	182	144	138	252	WCMT080412	M040W090	Q15B	1.96
	C40-47-255-W	2	47	40	185	147	141	255	WCMT080412	M040W090	Q15B	2.04
	C40-48-258-W	2	48	40	189	150	144	258	WCMT080412	M040W090	Q15B	2.11
	C40-49-262-W	2	49	40	192	153	147	262	WCMT080412	M040W090	Q15B	2.20
	C40-50-262-W	2	50	40	192	158	150	262	WCMT080412	M040W090	Q15B	2.28
	C40-51-262-W	2	51	40	192	162	153	262	WCMT080412	M040W090	Q15B	2.30
	C40-52-262-W	2	52	40	192	165	156	262	WCMT080412	M040W090	Q15B	2.40
	C40-53-262-W	2	53	40	192	168	159	262	WCMT080412	M040W090	Q15B	2.42
	C40-54-262-W	2	54	40	192	170	162	262	WCMT080412	M040W090	Q15B	2.46
	C40-55-262-W	2	55	40	192	175	165	262	WCMT080412	M040W090	Q15B	2.56
	C40-56-275-W	2	56	40	205	180	168	275	WCMT080412	M040W090	Q15B	2.79
	C40-57-275-W	2	57	40	205	185	171	275	WCMT080412	M040W090	Q15B	2.89
	C40-58-280-W	2	58	40	210	185	174	280	WCMT080412	M040W090	Q15B	2.95
	C40-59-285-W	2	59	40	215	187	177	285	WCMT080412	M040W090	Q15B	3.18
	C40-60-285-W	2	60	40	215	190	180	285	WCMT080412	M040W090	Q15B	3.22
	C40-61-290-W	2	61	40	220	190	183	290	WCMX050308	M030W070	Q08B	3.38
	C40-62-290-W	2	62	40	220	195	186	290	WCMX050308	M030W070	Q08B	3.47
	C40-63-295-W	2	63	40	225	195	189	295	WCMX050308	M030W070	Q08B	3.56
	C40-64-295-W	2	64	40	225	200	192	295	WCMX050308	M030W070	Q08B	3.72
	C40-65-300-W	2	65	40	230	200	195	300	WCMX050308	M030W070	Q08B	3.94
	C40-66-300-W	2	66	40	230	205	198	300	WCMX050308	M030W070	Q08B	4.01
	C40-67-305-W	2	67	40	235	205	201	305	WCMX050308	M030W070	Q08B	4.23
	C40-68-305-W	2	68	40	235	210	204	305	WCMX050308	M030W070	Q08B	4.28
	C40-69-315-W	2	69	40	245	210	207	315	WCMX050308	M030W070	Q08B	4.49
	C40-70-315-W	2	70	40	245	215	210	315	WCMX050308	M030W070	Q08B	4.60

適用 Suitable:德克或住友刀片 DEREK Or SUMITOMO Insert

KSD-W

KSD-W Indexable Insert Drill (4xD)
KSD-W捨弃式快速鑽頭（4倍長）



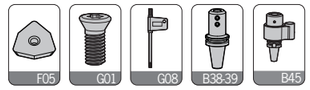

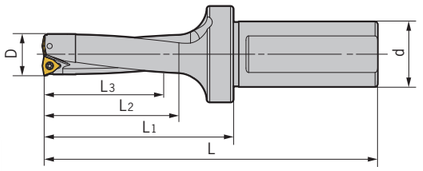

型號 Specification		刃數 Teeth	D	d	L1	L2	L3	L	刀片 Insert	刀片螺釘 Insert screw	旗形扳手 Wrench	重量 Weight
KSD-	C25-16-146-W	2	16	25	90	69	64	146	WCMX030208	M025W050	Q08B	0.35
	C25-16.5-146-W	2	16.5	25	90	69	64	146	WCMX030208	M025W050	Q08B	0.35
	C25-17-150-W	2	17	25	94	73	68	150	WCMX030208	M025W050	Q08B	0.35
	C25-17.5-150-W	2	17.5	25	94	73	68	150	WCMX030208	M025W050	Q08B	0.36
	C25-18-155-W	2	18	25	99	77	72	155	WCMX030208	M025W060	Q08B	0.37
	C25-18.5-155-W	2	18.5	25	99	77	72	155	WCMX030208	M025W060	Q08B	0.38
	C25-19-159-W	2	19	25	103	81	76	159	WCMX030208	M025W060	Q08B	0.39
	C25-19.5-159-W	2	19.5	25	103	81	76	159	WCMX030208	M025W060	Q08B	0.39
	C32-20-165-W	2	20	32	105	86	80	165	WCMX040208	M025W060	Q08B	0.58
	C32-20.5-165-W	2	20.5	32	105	88	82	165	WCMX040208	M025W060	Q08B	0.59
	C32-21-169-W	2	21	32	109	90	84	169	WCMX040208	M025W060	Q08B	0.60
	C32-21.5-169-W	2	21.5	32	109	92	86	169	WCMX040208	M025W060	Q08B	0.61
	C32-22-173-W	2	22	32	113	94	88	173	WCMX040208	M025W060	Q08B	0.63
	C32-22.5-173-W	2	22.5	32	113	96	90	173	WCMX040208	M025W060	Q08B	0.63
	C32-23-178-W	2	23	32	118	98	92	178	WCMX040208	M025W060	Q08B	0.65
	C32-23.5-178-W	2	23.5	32	118	100	94	178	WCMX040208	M025W060	Q08B	0.66
	C32-24-183-W	2	24	32	123	102	96	183	WCMX040208	M025W060	Q08B	0.67
	C32-24.5-183-W	2	24.5	32	123	104	98	183	WCMX040208	M025W060	Q08B	0.68
	C32-25-188-W	2	25	32	128	106	100	188	WCMT050308	M030W070	Q08B	0.69
	C32-25.5-188-W	2	25.5	32	128	106	100	188	WCMT050308	M030W070	Q08B	0.71
	C32-26-196-W	2	26	32	136	109	104	196	WCMT050308	M030W070	Q08B	0.75
	C32-26.5-196-W	2	26.5	32	136	109	104	196	WCMT050308	M030W070	Q08B	0.75
	C32-27-200-W	2	27	32	140	113	108	200	WCMT050308	M030W070	Q08B	0.77
	C32-28-205-W	2	28	32	145	117	112	205	WCMT050308	M030W070	Q08B	0.81
	C32-29-209-W	2	29	32	149	121	116	209	WCMT050308	M030W070	Q08B	0.84
	C32-30-215-W	2	30	32	155	126	120	215	WCMT050308	M030W070	Q08B	0.87
	C32-31-220-W	2	31	32	160	130	124	220	WCMT06T308	M035W090	Q15B	0.91
	C32-32-224-W	2	32	32	164	134	128	224	WCMT06T308	M035W090	Q15B	0.97
	C32-33-229-W	2	33	32	169	138	132	229	WCMT06T308	M035W090	Q15B	1.00
	C32-34-233-W	2	34	32	173	142	136	233	WCMT06T308	M035W090	Q15B	1.03
	C32-35-238-W	2	35	32	178	146	140	238	WCMT06T308	M035W090	Q15B	1.08
	C32-36-242-W	2	36	32	182	150	144	242	WCMT06T308	M035W090	Q15B	1.12
	C32-37-247-W	2	37	32	187	154	148	247	WCMT06T308	M035W090	Q15B	1.19
	C32-38-251-W	2	38	32	191	158	152	251	WCMT06T308	M035W090	Q15B	1.23
	C32-39-256-W	2	39	32	196	162	156	256	WCMT06T308	M035W090	Q15B	1.25

適用 Suitable:德克或住友刀片 DEREK Or SUMITOMO Insert

KSD-W

KSD-W Indexable Insert Drill (4xD)
KSD-W捨弃式快速鑽頭（4倍長）



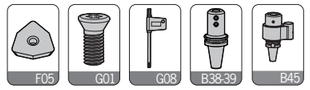

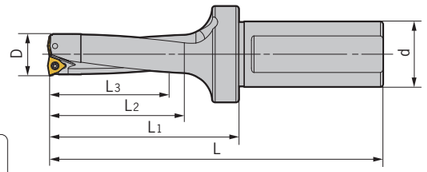

型號 Specification		刃數 Teeth	D	d	L1	L2	L3	L	刀片 Insert	刀片螺釘 Insert screw	旗形扳手 Wrench	重量 Weight
KSD-	C40-40-260-W	2	40	40	190	166	160	260	WCMT080412	M040W090	Q15B	1.78
	C40-41-265-W	2	41	40	195	170	164	265	WCMT080412	M040W090	Q15B	1.88
	C40-42-269-W	2	42	40	199	174	168	269	WCMT080412	M040W090	Q15B	1.92
	C40-43-274-W	2	43	40	204	178	172	274	WCMT080412	M040W090	Q15B	2.04
	C40-44-289-W	2	44	40	219	182	176	289	WCMT080412	M040W090	Q15B	2.20
	C40-45-294-W	2	45	40	224	186	180	294	WCMT080412	M040W090	Q15B	2.32
	C40-46-299-W	2	46	40	229	190	184	299	WCMT080412	M040W090	Q15B	2.38
	C40-47-303-W	2	47	40	233	194	188	303	WCMT080412	M040W090	Q15B	2.41
	C40-48-307-W	2	48	40	237	198	192	307	WCMT080412	M040W090	Q15B	2.53
	C40-49-313-W	2	49	40	243	202	196	313	WCMT080412	M040W090	Q15B	2.56
	C40-50-315-W	2	50	40	245	206	200	315	WCMT080412	M040W090	Q15B	2.69
	C40-51-319-W	2	51	40	249	210	204	319	WCMT080412	M040W090	Q15B	2.83
	C40-52-323-W	2	52	40	253	214	208	323	WCMT080412	M040W090	Q15B	2.84
	C40-53-327-W	2	53	40	257	218	212	327	WCMT080412	M040W090	Q15B	3.05
	C40-54-331-W	2	54	40	261	222	216	331	WCMT080412	M040W090	Q15B	3.23
	C40-55-335-W	2	55	40	265	226	220	335	WCMT080412	M040W090	Q15B	3.28
	C40-56-339-W	2	56	40	269	230	224	339	WCMT080412	M040W090	Q15B	3.43
	C40-57-343-W	2	57	40	273	234	228	343	WCMT080412	M040W090	Q15B	3.63
	C40-58-347-W	2	58	40	277	238	232	347	WCMT080412	M040W090	Q15B	3.77
	C40-59-351-W	2	59	40	281	242	236	351	WCMT080412	M040W090	Q15B	3.82
	C40-60-355-W	2	60	40	285	246	240	355	WCMT080412	M040W090	Q15B	3.97

適用 Suitable:德克或住友刀片 DEREK Or SUMITOMO Insert
注 Notice:切削參數詳見第H04頁 Cutting parameters refer to page H04

KSD-S

KSD-S Indexable Insert Drill (3xD)
KSD-S捨弃式快速鑽頭（3倍長）



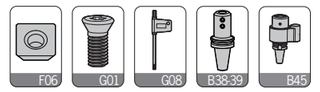

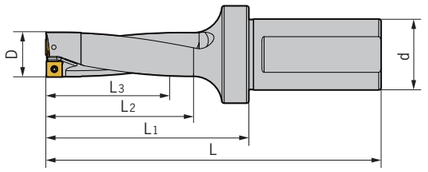

型號 Specification		刃數 Teeth	D	d	L1	L2	L3	L	刀片 Insert	刀片螺釘 Insert screw	旗形扳手 Wrench	重量 Weight
KSD-	C25-15-127-S	2	15	25	71	50	45	127	SPMG050204	M020W040	Q06B	0.32
	C25-15.5-127-S	2	15.5	25	71	50	45	127	SPMG060204	M022W050	Q06B	0.32
	C25-16-130-S	2	16	25	74	53	48	130	SPMG060204	M022W050	Q06B	0.33
	C25-16.5-130-S	2	16.5	25	74	53	48	130	SPMG060204	M022W050	Q06B	0.34
	C25-17-133-S	2	17	25	77	56	51	133	SPMG060204	M022W050	Q06B	0.34
	C25-17.5-133-S	2	17.5	25	77	56	51	133	SPMG060204	M022W050	Q06B	0.35
	C25-18-137-S	2	18	25	81	59	54	137	SPMG060204	M022W050	Q06B	0.36
	C25-18.5-137-S	2	18.5	25	81	59	54	137	SPMG060204	M022W050	Q06B	0.36
	C25-19-140-S	2	19	25	84	62	57	140	SPMG060204	M022W050	Q06B	0.37
	C25-19.5-140-S	2	19.5	25	84	62	57	140	SPMG060204	M022W050	Q06B	0.37
	C32-20-145-S	2	20	32	85	66	60	145	SPMG060204	M022W050	Q06B	0.57
	C32-20.5-145-S	2	20.5	32	85	66	60	145	SPMG060204	M022W050	Q06B	0.57
	C32-21-148-S	2	21	32	88	67	63	148	SPMG060204	M022W050	Q06B	0.58
	C32-21.5-148-S	2	21.5	32	88	68	63	148	SPMG060204	M022W050	Q06B	0.58
	C32-22-151-S	2	22	32	91	71	66	151	SPMG07T308	M025W060	Q08B	0.60
	C32-22.5-151-S	2	22.5	32	91	71	66	151	SPMG07T308	M025W060	Q08B	0.60
	C32-23-155-S	2	23	32	95	74	69	155	SPMG07T308	M025W060	Q08B	0.61
	C32-23.5-155-S	2	23.5	32	95	74	69	155	SPMG07T308	M025W060	Q08B	0.62
	C32-24-159-S	2	24	32	99	78	72	159	SPMG07T308	M025W060	Q08B	0.64
	C32-24.5-159-S	2	24.5	32	99	78	72	159	SPMG07T308	M025W060	Q08B	0.65
	C32-25-163-S	2	25	32	103	81	75	163	SPMG07T308	M025W060	Q08B	0.66
	C32-25.5-163-S	2	25.5	32	103	81	75	163	SPMG07T308	M025W060	Q08B	0.66
	C32-26-170-S	2	26	32	110	83	78	170	SPMG07T308	M025W060	Q08B	0.70
	C32-26.5-170-S	2	26.5	32	110	84	78	170	SPMG07T308	M025W060	Q08B	0.70
	C32-27-173-S	2	27	32	113	86	81	173	SPMG07T308	M025W060	Q08B	0.71
	C32-28-177-S	2	28	32	117	89	84	177	SPMG090408	M035W090	Q15B	0.75
	C32-29-180-S	2	29	32	120	92	87	180	SPMG090408	M035W090	Q15B	0.77
	C32-30-185-S	2	30	32	125	96	90	185	SPMG090408	M035W090	Q15B	0.81
	C32-31-189-S	2	31	32	129	99	93	189	SPMG090408	M035W090	Q15B	0.84
	C32-32-192-S	2	32	32	132	102	96	192	SPMG090408	M035W090	Q15B	0.88
	C32-33-196-S	2	33	32	136	105	99	196	SPMG090408	M035W090	Q15B	0.93
	C32-34-199-S	2	34	32	139	108	102	199	SPMG110408	M040W090	Q15B	0.94
	C32-35-203-S	2	35	32	143	111	105	203	SPMG110408	M040W090	Q15B	0.95
	C32-36-203-S	2	36	32	143	111	108	203	SPMG110408	M040W090	Q15B	1.06
	C32-37-210-S	2	37	32	150	117	111	210	SPMG110408	M040W090	Q15B	1.06
	C32-38-214-S	2	38	32	154	120	114	214	SPMG110408	M040W090	Q15B	1.06
	C32-39-217-S	2	39	32	157	123	117	217	SPMG110408	M040W090	Q15B	1.17

適用 Suitable:德克或特固克刀片 DEREK Or TAEGUTEC Insert

KSD-S

KSD-S Indexable Insert Drill (3xD)
KSD-S捨弃式快速鑽頭（3倍長）



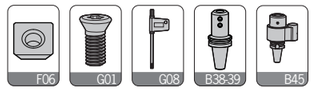

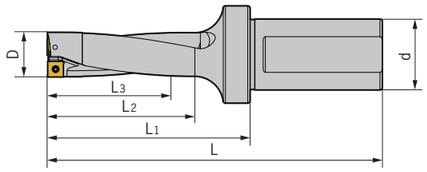

	型號 Specification	刃數 Teeth	D	d	L1	L2	L3	L	刀片 Insert	刀片螺釘 Insert screw	旗形扳手 Wrench	重量 Weight
KSD-	C40-40-231-S	2	40	40	161	126	120	231	SPMG110408	M040W090	Q15B	1.64
	C40-41-235-S	2	41	40	165	129	123	235	SPMG110408	M040W090	Q15B	1.64
	C40-42-238-S	2	42	40	168	132	126	238	SPMG140512	M050W090	Q20B	1.70
	C40-43-241-S	2	43	40	171	135	129	241	SPMG140512	M050W090	Q20B	1.77
	C40-44-245-S	2	44	40	175	138	132	245	SPMG140512	M050W090	Q20B	1.81
	C40-45-248-S	2	45	40	178	141	135	248	SPMG140512	M050W090	Q20B	1.81
	C40-46-252-S	2	46	40	182	144	138	252	SPMG140512	M050W090	Q20B	1.96
	C40-47-255-S	2	47	40	185	147	141	255	SPMG140512	M050W090	Q20B	2.04
	C40-48-258-S	2	48	40	189	150	144	258	SPMG140512	M050W090	Q20B	2.11
	C40-49-262-S	2	49	40	192	153	147	262	SPMG140512	M050W090	Q20B	2.20
	C40-50-262-S	2	50	40	192	158	150	262	SPMG140512	M050W090	Q20B	2.28
	C40-51-262-S	2	51	40	192	162	153	262	SPMG07T308	M025W060	Q08B	2.30
	C40-52-262-S	2	52	40	192	165	156	262	SPMG07T308	M025W060	Q08B	2.40
	C40-53-262-S	2	53	40	192	168	159	262	SPMG07T308	M025W060	Q08B	2.42
	C40-54-262-S	2	54	40	192	170	162	262	SPMG07T308	M025W060	Q08B	2.46
	C40-55-262-S	2	55	40	192	175	165	262	SPMG07T308	M025W060	Q08B	2.56
	C40-56-275-S	2	56	40	205	180	168	275	SPMG07T308	M025W060	Q08B	2.79
	C40-57-275-S	2	57	40	205	185	171	275	SPMG090408	M035W090	Q15B	2.79
	C40-58-280-S	2	58	40	210	185	174	280	SPMG090408	M035W090	Q15B	2.95
	C40-59-285-S	2	59	40	215	187	177	285	SPMG090408	M035W090	Q15B	3.18
	C40-60-285-S	2	60	40	215	190	180	285	SPMG090408	M035W090	Q15B	3.22
	C40-61-290-S	2	61	40	220	190	183	290	SPMG090408	M035W090	Q15B	3.38
	C40-62-290-S	2	62	40	220	195	186	290	SPMG090408	M035W090	Q15B	3.47
	C40-63-295-S	2	63	40	225	195	189	295	SPMG090408	M035W090	Q15B	3.56
	C40-64-295-S	2	64	40	225	200	192	295	SPMG090408	M035W090	Q15B	3.72
	C40-65-300-S	2	65	40	230	200	195	300	SPMG090408	M035W090	Q15B	3.94
	C40-66-300-S	2	66	40	230	205	198	300	SPMG090408	M035W090	Q15B	4.01
	C40-67-305-S	2	67	40	235	205	201	305	SPMG110408	M040W090	Q15B	4.23
	C40-68-305-S	2	68	40	235	210	204	305	SPMG110408	M040W090	Q15B	4.28
	C40-69-315-S	2	69	40	245	210	207	315	SPMG110408	M040W090	Q15B	4.49
	C40-70-315-S	2	70	40	245	215	210	315	SPMG110408	M040W090	Q15B	4.60

適用 Suitable:德克或特固克刀片 DEREK Or TAEGUTEC Insert

KSD-S

KSD-S Indexable Insert Drill (4xD)
KSD-S捨弃式快速鑽頭（4倍長）



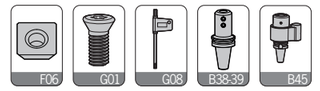

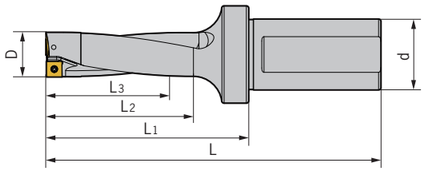

	型號 Specification	刃數 Teeth	D	d	L1	L2	L3	L	刀片 Insert	刀片螺釘 Insert screw	旗形扳手 Wrench	重量 Weight
KSD-	C25-16-146-S	2	16	25	90	69	64	146	SPMG060204	M022W050	Q06B	0.35
	C25-16.5-146-S	2	16.5	25	90	69	64	146	SPMG060204	M022W050	Q06B	0.35
	C25-17-150-S	2	17	25	94	73	68	150	SPMG060204	M022W050	Q06B	0.35
	C25-17.5-150-S	2	17.5	25	94	73	68	150	SPMG060204	M022W050	Q06B	0.36
	C25-18-155-S	2	18	25	99	77	72	155	SPMG060204	M022W050	Q06B	0.37
	C25-18.5-155-S	2	18.5	25	99	77	72	155	SPMG060204	M022W050	Q06B	0.38
	C25-19-159-S	2	19	25	103	81	76	159	SPMG060204	M022W050	Q06B	0.39
	C25-19.5-159-S	2	19.5	25	103	81	76	159	SPMG060204	M022W050	Q06B	0.39
	C32-20-165-S	2	20	32	105	86	80	165	SPMG060204	M022W050	Q06B	0.58
	C32-20.5-165-S	2	20.5	32	105	88	82	165	SPMG060204	M022W050	Q06B	0.59
	C32-21-169-S	2	21	32	109	90	84	169	SPMG060204	M022W050	Q06B	0.60
	C32-21.5-169-S	2	21.5	32	109	92	86	169	SPMG060204	M022W050	Q06B	0.61
	C32-22-173-S	2	22	32	113	94	88	173	SPMG07T308	M025W060	Q08B	0.63
	C32-22.5-173-S	2	22.5	32	113	96	90	173	SPMG07T308	M025W060	Q08B	0.63
	C32-23-178-S	2	23	32	118	98	92	178	SPMG07T308	M025W060	Q08B	0.65
	C32-23.5-178-S	2	23.5	32	118	100	94	178	SPMG07T308	M025W060	Q08B	0.66
	C32-24-183-S	2	24	32	123	102	96	183	SPMG07T308	M025W060	Q08B	0.67
	C32-24.5-183-S	2	24.5	32	123	104	98	183	SPMG07T308	M025W060	Q08B	0.68
	C32-25-188-S	2	25	32	128	106	100	188	SPMG07T308	M025W060	Q08B	0.69
	C32-25.5-188-S	2	25.5	32	128	106	100	188	SPMG07T308	M025W060	Q08B	0.71
	C32-26-196-S	2	26	32	136	109	104	196	SPMG07T308	M025W060	Q08B	0.74
	C32-26.5-196-S	2	26.5	32	136	109	104	196	SPMG07T308	M025W060	Q08B	0.75
	C32-27-200-S	2	27	32	140	113	108	200	SPMG07T308	M025W060	Q08B	0.77
	C32-28-205-S	2	28	32	145	117	112	205	SPMG090408	M035W090	Q15B	0.81
	C32-29-209-S	2	29	32	149	121	116	209	SPMG090408	M035W090	Q15B	0.84
	C32-30-215-S	2	30	32	155	126	120	215	SPMG090408	M035W090	Q15B	0.87
	C32-31-220-S	2	31	32	160	130	124	220	SPMG090408	M035W090	Q15B	0.91
	C32-32-224-S	2	32	32	164	134	128	224	SPMG090408	M035W090	Q15B	0.97
	C32-33-229-S	2	33	32	169	138	132	229	SPMG090408	M035W090	Q15B	1.00
	C32-34-233-S	2	34	32	173	142	136	233	SPMG110408	M040W090	Q15B	1.03
	C32-35-238-S	2	35	32	178	146	140	238	SPMG110408	M040W090	Q15B	1.08
	C32-36-242-S	2	36	32	182	150	144	242	SPMG110408	M040W090	Q15B	1.12
	C32-37-247-S	2	37	32	187	154	148	247	SPMG110408	M040W090	Q15B	1.19
	C32-38-251-S	2	38	32	191	158	152	251	SPMG110408	M040W090	Q15B	1.23
	C32-39-256-S	2	39	32	196	162	156	256	SPMG110408	M040W090	Q15B	1.25

適用 Suitable:德克或特固克刀片 DEREK Or TAEGUTEC Insert

KSD-S

KSD-S Indexable Insert Drill (4xD)
KSD-S捨弃式快速鑽頭（4倍長）



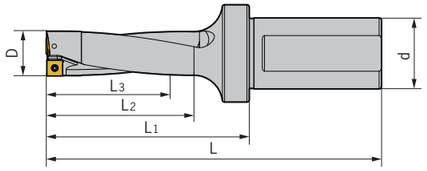

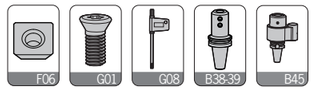

型號 Specification		刃數 Teeth	D	d	L1	L2	L3	L	刀片 Insert	刀片螺釘 Insert screw	旗形扳手 Wrench	重量 Weight
KSD-	C40-40-260-S	2	40	40	190	166	160	260	SPMG110408	M040W090	Q15B	1.78
	C40-41-265-S	2	41	40	195	170	164	265	SPMG110408	M040W090	Q15B	1.88
	C40-42-269-S	2	42	40	199	174	168	269	SPMG140512	M050W090	Q20B	1.92
	C40-43-274-S	2	43	40	204	178	172	274	SPMG140512	M050W090	Q20B	2.04
	C40-44-289-S	2	44	40	219	182	176	289	SPMG140512	M050W090	Q20B	2.20
	C40-45-294-S	2	45	40	224	186	180	294	SPMG140512	M050W090	Q20B	2.32
	C40-46-299-S	2	46	40	229	190	184	299	SPMG140512	M050W090	Q20B	2.38
	C40-47-303-S	2	47	40	233	194	188	303	SPMG140512	M050W090	Q20B	2.41
	C40-48-307-S	2	48	40	237	198	192	307	SPMG140512	M050W090	Q20B	2.53
	C40-49-313-S	2	49	40	243	202	196	313	SPMG140512	M050W090	Q20B	2.56
	C40-50-315-S	2	50	40	245	206	200	315	SPMG140512	M050W090	Q20B	2.69
	C40-51-319-S	2	51	40	249	210	204	319	SPMG07T308	M025W060	Q08B	2.79
	C40-52-323-S	2	52	40	253	214	208	323	SPMG07T308	M025W060	Q08B	2.84
	C40-53-327-S	2	53	40	257	218	212	327	SPMG07T308	M025W060	Q08B	3.05
	C40-54-331-S	2	54	40	261	222	216	331	SPMG07T308	M025W060	Q08B	3.23
	C40-55-335-S	2	55	40	265	226	220	335	SPMG07T308	M025W060	Q08B	3.28
	C40-56-339-S	2	56	40	269	230	224	339	SPMG07T308	M025W060	Q08B	3.43
	C40-57-343-S	2	57	40	273	234	228	343	SPMG090408	M035W090	Q15B	3.63
	C40-58-347-S	2	58	40	277	238	232	347	SPMG090408	M035W090	Q15B	3.77
	C40-59-351-S	2	59	40	281	242	236	351	SPMG090408	M035W090	Q15B	3.82
	C40-60-355-S	2	60	40	285	246	240	355	SPMG090408	M035W090	Q15B	3.97

適用 Suitable:德克或住友刀片 DEREK Or SUMITOMO Insert
注 Notice:切削參數詳見第H04頁 Cutting parameters refer to page H04

HSK-FBH

HSK-FBH Micro-boring Tool
HSK-FBH微調精密鏜頭組件



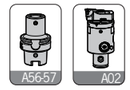

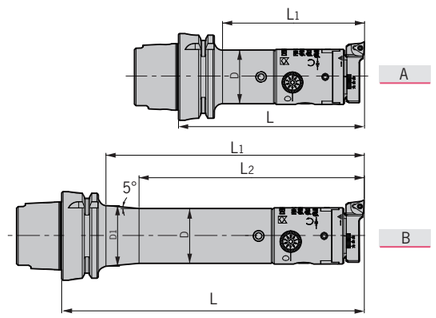

型號 Specification		組合方式 Tool 鏜頭刀柄 Boring Adapter	鏜頭 Boring Head	圖示 Fig	D	D1	L1	L2	L	加工範圍 Boring Range	重量 Weight
HSK63A-	FBH25-125	HSK63A- DCK2-75	DCK2-FBH25-M	A	24	-	93	-	125	29-38	1.05
	FBH25-180	DCK2-130L	DCK2-FBH25-M	B	24	31	148	115	180	29-38	1.25
	FBH32-143	DCK3-80	DCK3-FBH32-M	A	31	-	111	-	143	36-52	1.33
	FBH32-198	DCK3-135L	DCK3-FBH32-M	B	31	37	166	138	198	36-52	1.63
	FBH40-133	DCK4-70	DCK4-FBH40-M	A	39	-	101	-	133	48-68	1.53
	FBH40-213	DCK4-150L	DCK4-FBH40-M	B	39	44	181	158	213	48-68	2.23
	FBH50-160	DCK5-80	DCK5-FBH50-BM	A	50	-	131	-	160	57-80	2.42
	FBH63-180	DCK6-100	DCK6-FBH63-BMA	A	64	-	154	-	180	70-110	3.90
	FBH80-200	DCK6-100	DCK6-FBH80-BMB	A	64	-	174	-	200	110-150	5.70
HSK100A-	FBH25-130	HSK100A- DCK2-80	DCK2-FBH25-M	A	24	-	87	-	130	29-38	2.55
	FBH25-185	DCK2-135L	DCK2-FBH25-M	B	24	30	142	115	185	29-38	2.75
	FBH32-148	DCK3-85	DCK3-FBH32-M	A	31	-	105	-	148	36-52	2.93
	FBH32-203	DCK3-140L	DCK3-FBH32-M	B	31	35.5	160	138	203	36-52	3.13
	FBH40-163	DCK4-100	DCK4-FBH40-M	A	39	-	126	-	163	48-68	3.33
	FBH40-223	DCK4-160L	DCK4-FBH40-M	B	39	47	186	148	223	48-68	4.03
	FBH50-170	DCK5-90	DCK5-FBH50-BM	A	50	-	133	-	170	57-80	4.52
	FBH50-290	DCK5-210L	DCK5-FBH50-BM	B	50	61	253	200	290	57-80	5.82
	FBH63-165	DCK6-85	DCK6-FBH63-BMA	A	64	-	130	-	165	70-110	5.90
	FBH63-380	DCK6-300L	DCK6-FBH63-BMA	B	64	80	347	260	380	70-110	8.80
	FBH80-185	DCK6-85	DCK6-FBH80-BMB	A	64	-	150	-	185	110-150	7.70
	FBH80-400	DCK6-300L	DCK6-FBH80-BMB	B	64	80	367	280	400	110-150	10.60

HSK-CBH

HSK-CBH Micro-boring Tool
HSK-CBH微調精密鏜頭組件



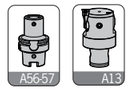

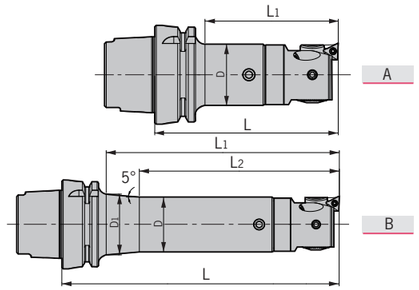

型號 Specification	組合方式 Tool 鏜頭刀柄 Boring Adapter	鏜頭 Boring Head	圖示 Fig	D	D1	L1	L2	L	加工範圍 Boring Range	重量 Weight
HSK63A-CBH2036-102.5	HSK63A-DCK1-70	DCK1-CBH20-36	A	19	-	70.5	-	102.5	20-36	0.86
CBH2036-132.5	DCK1-100L	DCK1-CBH20-36	B	19	23.5	100.5	82.5	132.5	20-36	0.96
CBH2547-110.5	DCK2-75	DCK2-CBH25-47	A	24	-	78.5	-	110.5	25-47	1.02
CBH2547-165.5	DCK2-130L	DCK2-CBH25-47	B	24	31	133.5	100.5	165.5	25-47	1.22
CBH3260-120	DCK3-80	DCK3-CBH32-60	A	31	-	88	-	120	32-60	1.20
CBH3260-175	DCK3-135L	DCK3-CBH32-60	B	31	37	143	115	175	32-60	1.50
CBH4174-117	DCK4-70	DCK4-CBH41-74	A	39	-	85	-	117	41-74	1.39
CBH4174-197	DCK4-150L	DCK4-CBH41-74	B	39	44	165	142	197	41-74	2.09
CBH5395-137	DCK5-80	DCK5-CBH53-95	A	50	-	108.2	-	137	53-95	2.20
CBH68150-171	DCK6-100	DCK6-CBH68-150	A	64	-	145	-	171	68-150	3.95
CBH100203-171	DCK6-100	DCK6-CBH100-203	A	64	-	145	-	171	100-203	4.67
CBH100203-181	DCK7-110	DCK7-CBH100-203	A	90	-	155	-	181	100-203	5.97
HSK100A-CBH2036-112.5	HSK100A-DCK1-70	DCK1-CBH20-36	A	19	-	77.5	-	112.5	20-36	2.46
CBH2036-147.5	DCK1-115L	DCK1-CBH20-36	B	19	24	112.5	82.5	147.5	20-36	2.56
CBH2547-115.5	DCK2-80	DCK2-CBH25-47	A	24	-	80.5	-	115.5	25-47	2.52
CBH2547-170.5	DCK2-135L	DCK2-CBH25-47	B	24	30	135.5	100.5	170.5	25-47	2.72
CBH3260-125	DCK3-85	DCK3-CBH32-60	A	31	-	90	-	125	32-60	2.80
CBH3260-180	DCK3-140L	DCK3-CBH32-60	B	31	35.5	145	115	180	32-60	3.00
CBH4174-147	DCK4-100	DCK4-CBH41-74	A	39	-	110	-	147	41-74	3.19
CBH4174-207	DCK4-160L	DCK4-CBH41-74	B	39	47	170	132	207	41-74	3.89
CBH5395-147	DCK5-90	DCK5-CBH53-95	A	50	-	110	-	147	53-95	4.30
CBH5395-267	DCK5-210L	DCK5-CBH53-95	B	50	61	230	177	267	53-95	5.60
CBH68150-156	DCK6-85	DCK6-CBH68-150	A	64	-	121	-	156	68-150	5.95
CBH68150-371	DCK6-300L	DCK6-CBH68-150	B	64	80	338	251	371	68-150	8.85
CBH100203-156	DCK6-85	DCK6-CBH100-203	A	64	-	121	-	156	100-203	6.67
CBH100203-371	DCK6-300L	DCK6-CBH100-203	B	64	80	338	251	371	100-203	9.57
CBH100203-196	DCK7-125	DCK7-CBH100-203	A	90	-	196	-	196	100-203	7.69

HSK-ABH

HSK-ABH Rough Boring Tool
HSK-ABH粗鏜頭組件



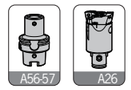

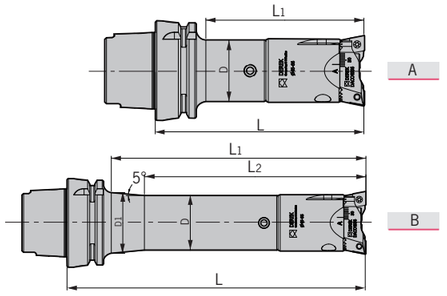

型號 Specification	組合方式 Tool 鏜頭刀柄 Boring Adapter	鏜頭 Boring Head	圖示 Fig	D	D1	L1	L2	L	加工範圍 Boring Range	重量 Weight
HSK63A-ABH25-125	HSK63A-DCK2-75	DCK2-ABH25	A	24	-	93	-	125	29-42	1.09
ABH25-180	DCK2-130L	DCK2-ABH25	B	24	31	148	115	180	29-42	1.29
ABH32-145	DCK3-80	DCK3-ABH32	A	31	-	113	-	145	36-52	1.37
ABH32-200	DCK3-135L	DCK3-ABH32	B	31	37	168	140	200	36-52	1.67
ABH40-133	DCK4-70	DCK4-ABH40	A	39	-	101	-	133	45-66	1.58
ABH40-213	DCK4-150L	DCK4-ABH40	B	39	44	181	158	213	45-66	2.28
ABH50-160	DCK5-80	DCK5-ABH50	A	50	-	131	-	160	56-92	2.54
ABH63-182	DCK6-100	DCK6-ABH63	A	64	-	156	-	182	70-110	4.10
ABH80-182	DCK6-100	DCK6-ABH80	A	64	-	156	-	182	90-170	4.64
HSK100A-ABH25-130	HSK100A-DCK2-80	DCK2-ABH25	A	24	-	87	-	130	29-42	2.59
ABH25-185	DCK2-135L	DCK2-ABH25	B	24	30	142	115	185	29-42	2.79
ABH32-150	DCK3-85	DCK3-ABH32	A	31	-	107	-	150	36-52	2.97
ABH32-205	DCK3-140L	DCK3-ABH32	B	31	35.5	162	140	205	36-52	3.17
ABH40-163	DCK4-100	DCK4-ABH40	A	39	-	126	-	163	45-66	3.38
ABH40-223	DCK4-160L	DCK4-ABH40	B	39	47	186	148	223	45-66	4.08
ABH50-170	DCK5-90	DCK5-ABH50	A	50	-	133	-	170	56-92	4.64
ABH50-290	DCK5-210L	DCK5-ABH50	B	50	61	253	200	290	56-92	5.94
ABH63-167	DCK6-85	DCK6-ABH63	A	64	-	132	-	167	70-110	6.10
ABH63-382	DCK6-300L	DCK6-ABH63	B	64	80	349	262	382	70-110	9.00
ABH80-182	DCK6-85	DCK6-ABH80	A	64	-	156	-	182	90-170	4.64
ABH80-382	DCK6-300L	DCK6-ABH80	B	64	80	349	262	382	90-170	9.54

HSK-DBH

HSK-DBH Rough Boring Tool
HSK-DBH粗鏜頭組件



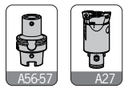

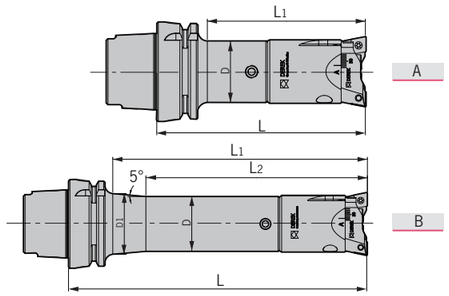

型號 Specification	組合方式 Tool 鏜頭刀柄 Boring Adapter	鏜頭 Boring Head	圖示 Fig	D	D1	L1	L2	L	加工範圍 Boring Range	重量 Weight
HSK63A-DBH2533-120	**HSK63A-DCK2-75**	**DCK2-DBH25-33**	A	24	-	78.5	-	110.5	25-33	1.02
DBH2533-175	**DCK2-130L**	**DCK2-DBH25-33**	B	24	31	133.5	100.5	165.5	25-33	1.22
DBH3242-135	**DCK3-80**	**DCK3-DBH32-42**	A	31	-	88	-	120	32-42	1.27
DBH3242-190	**DCK3-135L**	**DCK3-DBH32-42**	B	31	37	143	115	175	32-42	1.57
DBH4055-135	**DCK4-70**	**DCK4-DBH40-55**	A	39	-	85	-	117	40-55	1.49
DBH4055-215	**DCK4-150L**	**DCK4-DBH40-55**	B	39	44	165	142	197	40-55	2.19
DBH5270-155	**DCK5-80**	**DCK5-DBH52-70**	A	50	-	108.2	-	137	52-70	2.28
DBH6892-185	**DCK6-100**	**DCK6-DBH68-92**	A	64	-	145	-	171	68-92	3.80
DBH90122-200	**DCK6-100**	**DCK6-DBH90-122**	A	64	-	145	-	171	90-122	4.63
DBH120164-181	**DCK7-110**	**DCK7-DBH120-164**	A	90	-	155	-	181	120-164	8.20
DBH160204-181	**DCK7-110**	**DCK7-DBH160-204**	A	90	-	155	-	181	160-204	9.30
HSK100A-DBH2533-125	**HSK100A-DCK2-80**	**DCK2-DBH25-33**	A	24	-	80.5	-	115.5	25-33	2.62
DBH2533-180	**DCK2-135L**	**DCK2-DBH25-33**	B	24	30	135.5	100.5	170.5	25-33	2.72
DBH3242-140	**DCK3-85**	**DCK3-DBH32-42**	A	31	-	90	-	125	32-42	2.92
DBH3242-195	**DCK3-140L**	**DCK3-DBH32-42**	B	31	35.5	145	115	180	32-42	3.07
DBH4055-165	**DCK4-100**	**DCK4-DBH40-55**	A	39	-	110	-	147	40-55	3.29
DBH4055-225	**DCK4-160L**	**DCK4-DBH40-55**	B	39	47	170	132	207	40-55	3.99
DBH5270-165	**DCK5-90**	**DCK5-DBH52-70**	A	50	-	110	-	147	52-70	4.38
DBH5270-285	**DCK5-210L**	**DCK5-DBH52-70**	B	50	61	230	177	267	52-70	5.68
DBH6892-170	**DCK6-85**	**DCK6-DBH68-92**	A	64	-	121	-	156	68-92	5.80
DBH6892-385	**DCK6-300L**	**DCK6-DBH68-92**	B	64	80	338	251	371	68-92	8.70
DBH90122-185	**DCK6-85**	**DCK6-DBH90-122**	A	64	-	121	-	156	90-122	6.63
DBH90122-400	**DCK6-300L**	**DCK6-DBH90-122**	B	64	80	338	251	371	90-122	9.53
DBH120164-196	**DCK7-125**	**DCK7-DBH120-164**	A	90	-	161	-	196	120-164	9.92
DBH160204-196	**DCK7-125**	**DCK7-DBH160-204**	A	90	-	161	-	196	160-204	11.02

BT-FBH

BT-FBH Micro-boring Tool
BT-FBH微調精密鏜頭組件



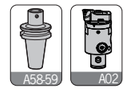

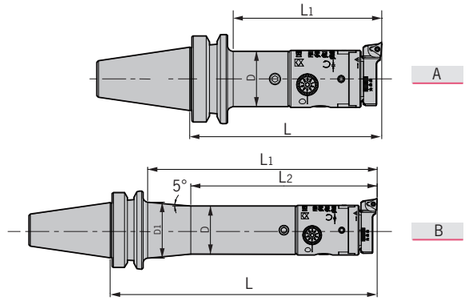

型號 Specification	組合方式 Tool 鏜頭刀柄 Boring Adapter	鏜頭 Boring Head	圖示 Fig	D	D1	L1	L2	L	加工範圍 Boring Range	重量 Weight
BT30-FBH25-130	**BT30-DCK2-80**	**DCK2-FBH25-M**	A	24	-	102	-	130	29-38	0.69
FBH32-143	**DCK3-80**	**DCK3-FBH32-M**	A	31	-	115	-	143	36-52	1.01
FBH40-133	**DCK4-70**	**DCK4-FBH40-M**	A	39	-	109	-	133	48-68	1.21
FBH50-150	**DCK5-70**	**DCK5-FBH50-BM**	A	50	-	128	-	150	57-80	1.9
FBH63-140	**DCK6-60**	**DCK6-FBH63-BMA**	A	64	-	118	-	140	70-110	2.59
FBH80-160	**DCK6-60**	**DCK6-FBH80-BMB**	A	64	-	138	-	160	110-150	4.39
BT40-FBH25-125	**BT40-DCK2-75**	**DCK2-FBH25-M**	A	24	-	92	-	125	29-38	1.25
FBH25-180	**DCK2-130L**	**DCK2-FBH25-M**	B	24	28.3	149	115	180	29-38	1.48
FBH32-143	**DCK3-80**	**DCK3-FBH32-M**	A	31	-	110	-	143	36-52	1.55
FBH32-198	**DCK3-135L**	**DCK3-FBH32-M**	B	31	34.5	167	138	198	36-52	1.87
FBH40-133	**DCK4-70**	**DCK4-FBH40-M**	A	39	-	98	-	133	48-68	1.74
FBH40-223	**DCK4-150L**	**DCK4-FBH40-M**	B	39	42.5	177	148	223	48-68	5.03
FBH50-140	**DCK5-60**	**DCK5-FBH50-BM**	A	50	-	108	-	140	57-80	2.24
FBH63-135	**DCK6-55**	**DCK6-FBH63-BMA**	A	64	-	108	-	135	70-110	2.92
FBH80-155	**DCK6-55**	**DCK6-FBH80-BMB**	A	64	-	128	-	155	110-150	4.72
BT50-FBH25-130	**BT50-DCK2-80**	**DCK2-FBH25-M**	A	24	-	82	-	130	29-38	3.73
FBH25-185	**DCK2-135L**	**DCK2-FBH25-M**	B	24	26.6	137	115	185	29-38	4.04
FBH32-148	**DCK3-85**	**DCK3-FBH32-M**	A	31	-	100	-	148	36-52	4.08
FBH32-203	**DCK3-140L**	**DCK3-FBH32-M**	B	31	32.7	155	138	203	36-52	4.42
FBH40-163	**DCK4-100**	**DCK4-FBH40-M**	A	39	-	117	-	163	48-68	4.51
FBH40-223	**DCK4-160L**	**DCK4-FBH40-M**	B	39	42.5	177	148	223	48-68	5.03
FBH50-170	**DCK5-90**	**DCK5-FBH50-BM**	A	50	-	124	-	170	57-80	5.32
FBH50-290	**DCK5-210L**	**DCK5-FBH50-BM**	B	50	57.8	244	200	290	57-80	6.94
FBH63-165	**DCK6-85**	**DCK6-FBH63-BMA**	A	64	-	117	-	165	70-110	5.98
FBH63-380	**DCK6-300L**	**DCK6-FBH63-BMA**	B	64	80.5	334	240	380	70-110	11.91
FBH80-185	**DCK6-85**	**DCK6-FBH80-BMB**	A	64	-	137	-	185	110-150	7.78
FBH80-400	**DCK6-300L**	**DCK6-FBH80-BMB**	B	64	80.5	354	260	400	110-150	13.71

BT-CBH

BT-CBH Micro-boring Tool
BT-CBH微調精密鏜頭組件



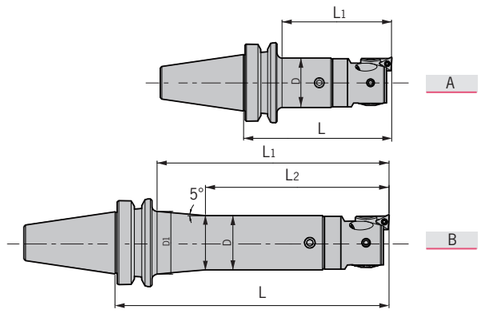

型號 Specification	組合方式 Tool 鏜頭刀柄 Boring Adapter	鏜頭 Boring Head	圖示 Fig	D	D1	L1	L2	L	加工範圍 Boring Range	重量 Weight
BT30-CBH2036-87.5	BT30-DCK1-55	DCK1-CBH20-36	A	19	-	61.5	-	87.5	20-36	0.48
CBH2547-115.5	DCK2-80	DCK2-CBH25-47	A	24	-	87.5	-	115.5	25-47	0.66
CBH3260-120	DCK3-80	DCK3-CBH32-60	A	31	-	92	-	120	32-60	0.88
CBH4174-117	DCK4-70	DCK4-CBH41-74	A	39	-	93	-	117	41-74	1.07
CBH5395-127	DCK5-70	DCK5-CBH53-95	A	50	-	105	-	127	53-95	1.68
CBH68150-131	DCK6-60	DCK6-CBH68-150	A	64	-	109	-	131	68-150	2.64
CBH100203-131	DCK6-60	DCK6-CBH100-203	A	64	-	109	-	131	100-203	3.36
BT40-CBH2036-102.5	BT40-DCK1-70	DCK1-CBH20-36	A	19	-	69.5	-	102.5	20-36	1.09
CBH2036-132.5	DCK1-100L	DCK1-CBH20-36	B	19	20.7	101.5	82.5	132.5	20-36	1.16
CBH2547-110.5	DCK2-75	DCK2-CBH25-47	A	24	-	77.5	-	110.5	25-47	1.22
CBH2547-165.5	DCK2-130L	DCK2-CBH25-47	B	24	28.3	134.5	100.5	165.5	25-47	1.45
CBH3260-120	DCK3-80	DCK3-CBH32-60	A	31	-	87	-	120	32-60	1.42
CBH3260-175	DCK3-135L	DCK3-CBH32-60	B	31	34.5	144	115	175	32-60	1.74
CBH4174-117	DCK4-70	DCK4-CBH41-74	A	39	-	82	-	117	41-74	1.60
CBH4174-197	DCK4-150L	DCK4-CBH41-74	B	39	43.4	166	132	197	41-74	2.55
CBH5395-117	DCK5-60	DCK5-CBH53-95	A	50	-	85	-	117	53-95	2.02
CBH68150-126	DCK6-55	DCK6-CBH68-150	A	64	-	99	-	126	68-150	2.97
CBH100203-126	DCK6-55	DCK6-CBH100-203	A	64	-	99	-	126	100-203	3.69
CBH100203-171	DCK7-100	DCK7-CBH100-203	A	90	-	144	-	171	100-203	5.97
BT50-CBH2036-112.5	BT50-DCK1-80	DCK1-CBH20-36	A	19	-	64.5	-	112.5	20-36	3.26
CBH2036-147.5	DCK1-115L	DCK1-CBH20-36	B	19	20.7	99.5	82.5	147.5	20-36	3.79
CBH2547-115.5	DCK2-80	DCK2-CBH25-47	A	24	-	67.5	-	115.5	25-47	3.70
CBH2547-170.5	DCK2-135L	DCK2-CBH25-47	B	24	26.6	122.5	100.5	170.5	25-47	4.01
CBH3260-125	DCK3-85	DCK3-CBH32-60	A	31	-	77	-	125	32-60	3.95
CBH3260-180	DCK3-140L	DCK3-CBH32-60	B	31	32.7	132	115	180	32-60	4.29
CBH4174-147	DCK4-100	DCK4-CBH41-74	A	39	-	101	-	147	41-74	4.37
CBH4174-207	DCK4-160L	DCK4-CBH41-74	B	39	42.5	161	132	207	41-74	4.89
CBH5395-117	DCK5-60	DCK5-CBH53-95	A	50	-	85	-	117	53-95	2.02
CBH5395-267	DCK5-210L	DCK5-CBH53-95	B	50	57.8	221	177	267	53-95	6.72
CBH68150-156	DCK6-85	DCK6-CBH68-150	A	64	-	108	-	156	68-150	6.03
CBH68150-371	DCK6-300L	DCK6-CBH68-150	B	64	80.5	325	231	371	68-150	11.96
CBH100203-156	DCK6-85	DCK6-CBH100-203	A	64	-	108	-	156	100-203	6.75
CBH100203-371	DCK6-300L	DCK6-CBH100-203	B	64	80.5	325	231	371	100-203	12.68
CBH100203-156	DCK7-85	DCK7-CBH100-203	A	90	-	108	-	156	100-203	7.43

BT-ABH

BT-ABH Rough Boring Tool
BT-ABH粗鏜頭組件



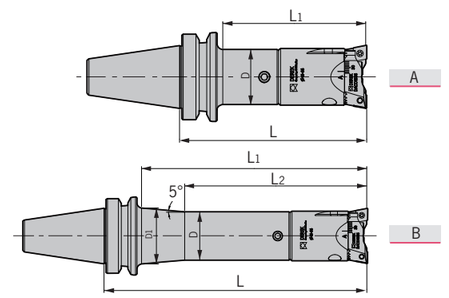

型號 Specification	組合方式 Tool 鏜頭刀柄 Boring Adapter	鏜頭 Boring Head	圖示 Fig	D	D1	L1	L2	L	加工範圍 Boring Range	重量 Weight
BT30-ABH25-130	BT30-DCK2-80	DCK2-ABH25	A	24	-	102	-	130	29-42	0.73
ABH32-145	DCK3-80	DCK3-ABH32	A	31	-	117	-	145	36-52	1.05
ABH40-133	DCK4-70	DCK4-ABH40	A	39	-	109	-	133	45-66	1.26
ABH50-150	DCK5-70	DCK5-ABH50	A	50	-	128	-	150	56-92	2.02
ABH63-142	DCK6-60	DCK6-ABH63	A	64	-	120	-	142	70-110	2.79
ABH80-142	DCK6-60	DCK6-ABH80	A	64	-	120	-	142	90-170	3.33
BT40-ABH25-125	BT40-DCK2-75	DCK2-ABH25	A	24	-	92	-	125	29-42	1.29
ABH25-180	DCK2-130L	DCK2-ABH25	B	24	28.3	149	115	180	29-42	1.52
ABH32-145	DCK3-80	DCK3-ABH32	A	31	-	112	-	145	36-52	1.59
ABH32-200	DCK3-135L	DCK3-ABH32	B	31	34.5	169	140	200	36-52	1.91
ABH40-133	DCK4-70	DCK4-ABH40	A	39	-	98	-	133	45-66	1.79
ABH40-213	DCK4-150L	DCK4-ABH40	B	39	43.4	182	148	213	45-66	2.74
ABH50-140	DCK5-60	DCK5-ABH50	A	50	-	108	-	140	56-92	2.36
ABH63-137	DCK6-55	DCK6-ABH63	A	64	-	110	-	137	70-110	3.12
ABH80-137	DCK6-55	DCK6-ABH80	A	64	-	110	-	137	90-170	3.66
BT50-ABH25-130	BT50-DCK2-80	DCK2-ABH25	A	24	-	82	-	130	29-42	3.77
ABH25-185	DCK2-135L	DCK2-ABH25	B	24	26.6	137	115	185	29-42	4.08
ABH32-150	DCK3-85	DCK3-ABH32	A	31	-	102	-	150	36-52	4.12
ABH32-205	DCK3-140L	DCK3-ABH32	B	31	32.7	157	140	205	36-52	4.46
ABH40-163	DCK4-100	DCK4-ABH40	A	39	-	117	-	163	45-66	4.56
ABH40-223	DCK4-160L	DCK4-ABH40	B	39	42.5	177	148	223	45-66	5.08
ABH50-170	DCK5-90	DCK5-ABH50	A	50	-	124	-	170	56-92	5.44
ABH50-290	DCK5-210L	DCK5-ABH50	B	50	57.8	244	200	290	56-92	7.06
ABH63-167	DCK6-85	DCK6-ABH63	A	64	-	119	-	167	70-110	6.18
ABH63-382	DCK6-300L	DCK6-ABH63	B	64	80.5	336	242	382	70-110	12.11
ABH80-167	DCK6-85	DCK6-ABH80	A	64	-	119	-	167	90-170	6.72
ABH80-382	DCK6-300L	DCK6-ABH80	B	64	80.5	336	242	382	90-170	12.65

BT-DBH

BT-DBH Rough Boring Tool
BT-DBH粗鏜頭組件



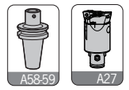

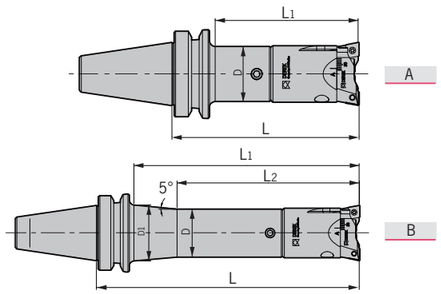

型號 Specification	組合方式 Tool 鏜頭刀柄 Boring Adapter	鏜頭 Boring Head	圖示 Fig	D	D1	L1	L2	L	加工範圍 Boring Range	重量 Weight
BT30- DBH2533-125	BT30- DCK2-80	DCK2-DBH25-33	A	24	-	87.5	-	115.5	25-33	0.66
DBH3242-135	DCK3-80	DCK3-DBH32-42	A	31	-	92	-	120	32-42	0.95
DBH4055-135	DCK4-70	DCK4-DBH40-55	A	39	-	93	-	117	40-55	1.17
DBH5270-145	DCK5-70	DCK5-DBH52-70	A	50	-	105	-	127	52-70	1.76
DBH6892-145	DCK6-60	DCK6-DBH68-92	A	64	-	109	-	131	68-92	2.49
DBH90122-160	DCK6-60	DCK6-DBH90-122	A	64	-	109	-	131	90-122	3.32
BT40- DBH2533-120	BT40- DCK2-75	DCK2-DBH25-33	A	24	-	77.5	-	110.5	25-33	1.22
DBH2533-175	DCK2-130L	DCK2-DBH25-33	B	24	28.3	134.5	100.5	165.5	25-33	1.45
DBH3242-135	DCK3-80	DCK3-DBH32-42	A	31	-	87	-	120	32-42	1.49
DBH3242-190	DCK3-135L	DCK3-DBH32-42	B	31	34.5	144	115	175	32-42	1.81
DBH4055-135	DCK4-70	DCK4-DBH40-55	A	39	-	82	-	117	40-55	1.70
DBH4055-215	DCK4-150L	DCK4-DBH40-55	B	39	43.4	166	132	197	40-55	2.39
DBH5270-135	DCK5-60	DCK5-DBH52-70	A	50	-	85	-	117	52-70	2.10
DBH6892-140	DCK6-55	DCK6-DBH68-92	A	64	-	99	-	126	68-92	2.82
DBH90122-155	DCK6-55	DCK6-DBH90-122	A	64	-	99	-	126	90-122	3.65
DBH120164-171	DCK7-100	DCK7-DBH120-164	A	90	-	144	-	171	120-164	8.20
DBH160204-171	DCK7-100	DCK7-DBH160-204	A	90	-	144	-	171	160-204	9.30
BT50- DBH2533-125	BT50- DCK2-80	DCK2-DBH25-33	A	24	-	67.5	-	115.5	25-33	3.70
DBH2533-180	DCK2-135L	DCK2-DBH25-33	B	24	26.6	122.5	100.5	170.5	25-33	4.01
DBH3242-140	DCK3-85	DCK3-DBH32-42	A	31	-	77	-	125	32-42	4.02
DBH3242-195	DCK3-140L	DCK3-DBH32-42	B	31	32.7	132	115	180	32-42	4.36
DBH4055-165	DCK4-100	DCK4-DBH40-55	A	39	-	101	-	147	40-55	4.47
DBH4055-225	DCK4-160L	DCK4-DBH40-55	B	39	42.5	161	132	207	40-55	4.99
DBH5270-165	DCK5-90	DCK5-DBH52-70	A	50	-	85	-	117	52-70	5.18
DBH5270-285	DCK5-210L	DCK5-DBH52-70	B	50	57.8	221	177	267	52-70	6.80
DBH6892-170	DCK6-85	DCK6-DBH68-92	A	64	-	108	-	156	68-92	5.88
DBH6892-385	DCK6-300L	DCK6-DBH68-92	B	64	80.5	325	231	371	68-92	11.81
DBH90122-185	DCK6-85	DCK6-DBH90-122	A	64	-	108	-	156	90-122	6.71
DBH90122-400	DCK6-300L	DCK6-DBH90-122	B	64	80.5	325	231	371	90-122	12.64
DBH120164-156	DCK7-85	DCK7-DBH120-164	A	90	-	108	-	156	120-164	11.81
DBH160204-156	DCK7-85	DCK7-DBH160-204	A	90	-	108	-	156	160-204	12.64

SK-FBH

SK-FBH Micro-boring Tool
SK-FBH微調精密鏜頭組件



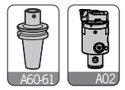

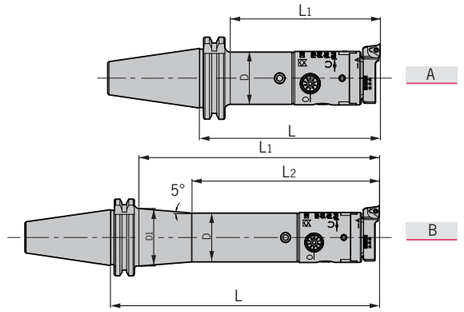

型號 Specification	組合方式 Tool 鏜頭刀柄 Boring Adapter	鏜頭 Boring Head	圖示 Fig	D	D1	L1	L2	L	加工範圍 Boring Range	重量 Weight
SK30- FBH25-130	SK30- DCK2-80	DCK2-FBH25-M	A	24	-	104.9	-	130	29-38	0.69
FBH32-143	DCK3-80	DCK3-FBH32-M	A	31	-	117.9	-	143	36-52	1.01
FBH40-133	DCK4-70	DCK4-FBH40-M	A	39	-	111.9	-	133	48-68	1.21
FBH50-150	DCK5-70	DCK5-FBH50-BM	A	50	-	130.9	-	150	57-80	1.9
FBH63-140	DCK6-80	DCK6-FBH63-BMA	A	64	-	150.9	-	160	70-110	2.59
FBH80-160	DCK6-80	DCK6-FBH80-BMB	A	64	-	160.9	-	180	110-150	4.39
SK40- FBH25-125	SK40- DCK2-75	DCK2-FBH25-M	A	24	-	99.9	-	125	29-38	1.25
FBH25-180	DCK2-130L	DCK2-FBH25-M	B	24	28.3	154.9	115	180	29-38	1.48
FBH32-143	DCK3-80	DCK3-FBH32-M	A	31	-	115.9	-	143	36-52	1.55
FBH32-198	DCK3-135L	DCK3-FBH32-M	B	31	34.5	174.9	138	198	36-52	1.87
FBH40-133	DCK4-70	DCK4-FBH40-M	A	39	-	109.9	-	133	48-68	1.74
FBH40-213	DCK4-150L	DCK4-FBH40-M	B	39	43.4	189.9	148	213	48-68	2.43
FBH50-160	DCK5-80	DCK5-FBH50-BM	A	50	-	136.9	-	160	57-80	2.54
FBH63-170	DCK6-90	DCK6-FBH63-BMA	A	64	-	150.9	-	170	70-110	2.92
FBH80-190	DCK6-90	DCK6-FBH80-BMB	A	64	-	170.9	-	190	110-150	4.72
SK50- FBH25-130	SK50- DCK2-80	DCK2-FBH25-M	A	24	-	100.9	-	130	29-38	3.73
FBH25-185	DCK2-135L	DCK2-FBH25-M	B	24	26.6	157.9	115	185	29-38	4.04
FBH32-148	DCK3-85	DCK3-FBH32-M	A	31	-	118.9	-	148	36-52	4.08
FBH32-203	DCK3-140L	DCK3-FBH32-M	B	31	32.7	175.9	148	203	36-52	4.42
FBH40-163	DCK4-100	DCK4-FBH40-M	A	39	-	135.9	-	163	48-68	4.51
FBH40-223	DCK4-160L	DCK4-FBH40-M	B	39	42.5	195.9	148	223	48-68	5.03
FBH50-170	DCK5-90	DCK5-FBH50-BM	A	50	-	142.9	-	170	57-80	5.32
FBH50-290	DCK5-210L	DCK5-FBH50-BM	B	50	57.8	262.9	200	290	57-80	6.94
FBH63-165	DCK6-85	DCK6-FBH63-BMA	A	64	-	135.9	-	165	70-110	5.98
FBH63-380	DCK6-300L	DCK6-FBH63-BMA	B	64	80.5	356.9	250	380	70-110	7.67
FBH80-185	DCK6-85	DCK6-FBH80-BMB	A	64	-	155.9	-	185	110-150	7.78
FBH80-400	DCK6-300L	DCK6-FBH80-BMB	B	64	80.5	376.9	270	400	110-150	9.47

SK-CBH

SK-CBH Micro-boring Tool
SK-CBH微調精密鏜頭組件





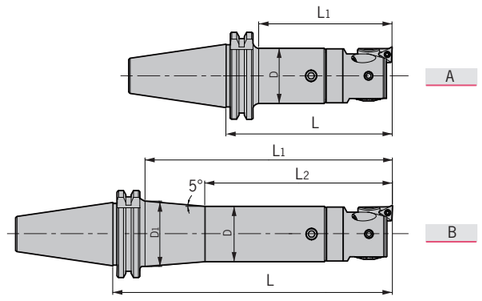

型號 Specification		組合方式 Tool 鏜頭刀柄 Boring Adapter	鏜頭 Boring Head	圖示 Fig	D	D1	L1	L2	L	加工範圍 Boring Range	重量 Weight
SK30-	CBH2036-87.5	SK30- DCK1-55	DCK1-CBH20-36	A	19	-	64.4	-	87.5	20-36	0.48
	CBH2547-115.5	DCK2-80	DCK2-CBH25-47	A	24	-	90.4	-	115.5	25-47	0.66
	CBH3260-120	DCK3-80	DCK3-CBH32-60	A	31	-	94.9	-	120	32-60	0.88
	CBH4174-117	DCK4-70	DCK4-CBH41-74	A	39	-	95.9	-	117	41-74	1.07
	CBH5395-127	DCK5-70	DCK5-CBH53-95	A	50	-	107.9	-	127	53-95	1.68
	CBH68150-131	DCK6-80	DCK6-CBH68-150	A	64	-	127.9	-	151	68-150	2.64
SK40-	CBH2036-102.5	SK40- DCK1-70	DCK1-CBH20-36	A	19	-	77.4	-	102.5	20-36	1.09
	CBH2036-132.5	DCK1-100L	DCK1-CBH20-36	B	19	20.7	107.4	82.5	132.5	20-36	1.16
	CBH2547-110.5	DCK2-75	DCK2-CBH25-47	A	24	-	85.4	-	110.5	25-47	1.22
	CBH2547-165.5	DCK2-130L	DCK2-CBH25-47	B	24	28.3	140.4	100.5	165.5	25-47	1.45
	CBH3260-120	DCK3-80	DCK3-CBH32-60	A	31	-	92.9	-	120	32-60	1.42
	CBH3260-175	DCK3-135L	DCK3-CBH32-60	B	31	34.5	151.9	115	175	32-60	1.74
	CBH4174-117	DCK4-70	DCK4-CBH41-74	A	39	-	93.9	-	117	41-74	1.60
	CBH4174-197	DCK4-150L	DCK4-CBH41-74	B	39	43.4	173.9	132	197	41-74	2.29
	CBH5395-137	DCK5-80	DCK5-CBH53-95	A	50	-	113.9	-	137	53-95	2.32
	CBH68150-161	DCK6-90	DCK6-CBH68-150	A	64	-	141.9	-	161	68-150	2.97
	CBH100203-161	DCK6-90	DCK6-CBH100-203	A	64	-	141.9	-	161	100-203	3.69
	CBH100203-171	DCK7-100	DCK7-CBH100-203	A	90	-	146.9	-	171	100-203	5.97
SK50-	CBH2036-112.5	SK50- DCK1-80	DCK1-CBH20-36	A	19	-	83.4	-	112.5	20-36	3.59
	CBH2036-147.5	DCK1-115L	DCK1-CBH20-36	B	19	20.7	120.4	82.5	147.5	20-36	3.79
	CBH2547-115.5	DCK2-80	DCK2-CBH25-47	A	24	-	86.4	-	115.5	25-47	3.70
	CBH2547-170.5	DCK2-135L	DCK2-CBH25-47	B	24	26.6	143.4	100.5	170.5	25-47	4.01
	CBH3260-125	DCK3-85	DCK3-CBH32-60	A	31	-	95.9	-	125	32-60	3.95
	CBH3260-180	DCK3-140L	DCK3-CBH32-60	B	31	32.7	152.9	125	180	32-60	4.29
	CBH4174-147	DCK4-100	DCK4-CBH41-74	A	39	-	119.9	-	147	41-74	4.37
	CBH4174-207	DCK4-160L	DCK4-CBH41-74	B	39	42.5	179.9	132	207	41-74	4.89
	CBH5395-147	DCK5-90	DCK5-CBH53-95	A	50	-	119.9	-	147	53-95	5.10
	CBH5395-267	DCK5-210L	DCK5-CBH53-95	B	50	57.8	239.9	177	267	53-95	6.72
	CBH68150-156	DCK6-85	DCK6-CBH68-150	A	64	-	126.9	-	156	68-150	6.03
	CBH68150-371	DCK6-300L	DCK6-CBH68-150	B	64	80.5	347.9	241	371	68-150	7.72
	CBH100203-156	DCK6-85	DCK6-CBH100-203	A	64	-	126.9	-	156	100-203	6.75
	CBH100203-371	DCK6-300L	DCK6-CBH100-203	B	64	80.5	347.9	241	371	100-203	8.44
	CBH100203-156	DCK7-85	DCK7-CBH100-203	A	90	-	131.9	-	156	100-203	7.43

SK-ABH

SK-ABH Rough Boring Tool
SK-ABH粗鏜頭組件



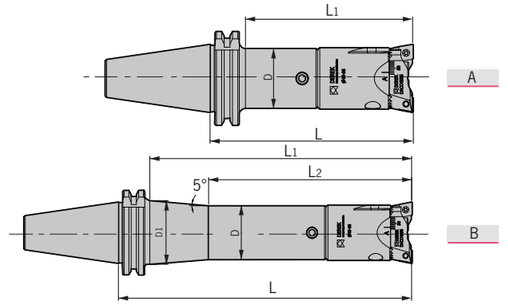

型號 Specification		組合方式 Tool 鏜頭刀柄 Boring Adapter	鏜頭 Boring Head	圖示 Fig	D	D1	L1	L2	L	加工範圍 Boring Range	重量 Weight
SK30-	ABH25-130	SK30- DCK2-80	DCK2-ABH25	A	24	-	104.9	-	130	29-42	0.73
	ABH32-145	DCK3-80	DCK3-ABH32	A	31	-	119.9	-	145	36-52	1.05
	ABH40-133	DCK4-70	DCK4-ABH40	A	39	-	111.9	-	133	45-66	1.26
	ABH50-150	DCK5-70	DCK5-ABH50	A	50	-	130.9	-	150	56-92	2.02
	ABH63-142	DCK6-80	DCK6-ABH63	A	64	-	142.9	-	162	70-110	2.79
	ABH80-142	DCK6-80	DCK6-ABH80	A	64	-	142.9	-	162	90-170	3.33
SK40-	ABH25-125	SK40- DCK2-75	DCK2-ABH25	A	24	-	99.9	-	125	29-42	1.29
	ABH25-180	DCK2-130L	DCK2-ABH25	B	24	28.3	154.9	115	180	29-42	1.52
	ABH32-145	DCK3-80	DCK3-ABH32	A	31	-	117.9	-	145	36-52	1.59
	ABH32-200	DCK3-135L	DCK3-ABH32	B	31	34.5	176.9	140	200	36-52	1.92
	ABH40-133	DCK4-70	DCK4-ABH40	A	39	-	109.9	-	133	45-66	1.79
	ABH40-213	DCK4-150L	DCK4-ABH40	B	39	43.4	189.9	158	213	45-66	2.48
	ABH50-160	DCK5-80	DCK5-ABH50	A	50	-	136.9	-	160	56-92	2.66
	ABH63-172	DCK6-90	DCK6-ABH63	A	64	-	152.9	-	172	70-110	3.12
	ABH80-172	DCK6-90	DCK6-ABH80	A	64	-	152.9	-	172	90-170	3.66
SK50-	ABH25-130	SK50- DCK2-80	DCK2-ABH25	A	24	-	100.9	-	130	29-42	3.77
	ABH25-185	DCK2-135L	DCK2-ABH25	B	24	26.6	157.9	115	185	29-42	4.08
	ABH32-150	DCK3-85	DCK3-ABH32	A	31	-	120.9	-	150	36-52	4.12
	ABH32-205	DCK3-140L	DCK3-ABH32	B	31	32.7	177.9	150	205	36-52	4.46
	ABH40-163	DCK4-100	DCK4-ABH40	A	39	-	135.9	-	163	45-66	4.56
	ABH40-223	DCK4-160L	DCK4-ABH40	B	39	42.5	195.9	148	223	45-66	5.08
	ABH50-170	DCK5-90	DCK5-ABH50	A	50	-	142.9	-	170	56-92	5.44
	ABH50-290	DCK5-210L	DCK5-ABH50	B	50	57.8	262.9	200	290	56-92	7.06
	ABH63-167	DCK6-85	DCK6-ABH63	A	64	-	137.9	-	167	70-110	6.18
	ABH63-382	DCK6-300L	DCK6-ABH63	B	64	80.5	358.9	252	382	70-110	7.87
	ABH80-167	DCK6-85	DCK6-ABH80	A	64	-	137.9	-	167	90-170	6.72
	ABH80-382	DCK6-300L	DCK6-ABH80	B	64	80.5	358.9	252	382	90-170	8.41

SK-DBH

SK-DBH Rough Boring Tool
SK-DBH粗鏜頭組件



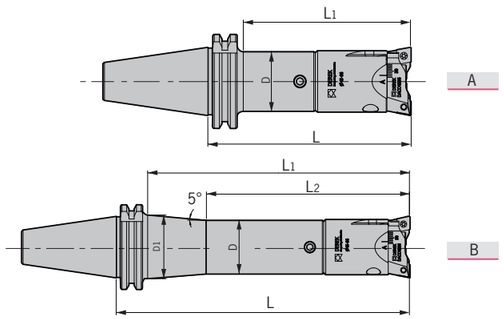

型號 Specification	組合方式 Tool 鏜頭刀柄 Boring Adapter	鏜頭 Boring Head	圖示 Fig	D	D1	L1	L2	L	加工範圍 Boring Range	重量 Weight
SK30- DBH2533-125	**SK30-** DCK2-80	DCK2-DBH25-33	A	24	-	90.4	-	115.5	25-33	0.66
DBH3242-135	DCK3-80	DCK3-DBH32-42	A	31	-	94.9	-	120	32-42	0.95
DBH4055-135	DCK4-70	DCK4-DBH40-55	A	39	-	95.9	-	117	40-55	1.17
DBH5270-145	DCK5-70	DCK5-DBH52-70	A	50	-	107.9	-	127	52-70	1.76
DBH6892-145	DCK6-80	DCK6-DBH68-92	A	64	-	131.9	-	151	68-92	2.49
DBH90122-160	DCK6-80	DCK6-DBH90-122	A	64	-	131.9	-	151	90-122	3.32
SK40- DBH2533-120	**SK40-** DCK2-75	DCK2-DBH25-33	A	24	-	85.4	-	110.5	25-33	1.22
DBH2533-175	DCK2-130L	DCK2-DBH25-33	B	24	28.3	140.4	100.5	165.5	25-33	1.45
DBH3242-135	DCK3-80	DCK3-DBH32-42	A	31	-	92.9	-	120	32-42	1.49
DBH3242-190	DCK3-135L	DCK3-DBH32-42	B	31	34.5	151.9	115	175	32-42	1.81
DBH4055-135	DCK4-70	DCK4-DBH40-55	A	39	-	93.9	-	117	40-55	1.73
DBH4055-215	DCK4-150L	DCK4-DBH40-55	B	39	43.4	173.9	132	197	40-55	2.39
DBH5270-155	DCK5-80	DCK5-DBH52-70	A	50	-	113.9	-	137	52-70	2.40
DBH6892-175	DCK6-90	DCK6-DBH68-92	A	64	-	141.9	-	161	68-92	2.82
DBH90122-190	DCK6-90	DCK6-DBH90-122	A	64	-	141.9	-	161	90-122	3.65
DBH120164-171	DCK7-100	DCK7-DBH120-164	A	90	-	146.9	-	171	120-164	8.20
DBH160204-171	DCK7-100	DCK7-DBH160-204	A	90	-	146.9	-	171	160-204	9.30
SK50- DBH2533-125	**SK50-** DCK2-80	DCK2-DBH25-33	A	24	-	86.4	-	115.5	25-33	3.52
DBH2533-180	DCK2-135L	DCK2-DBH25-33	B	24	26.6	143.4	100.5	170.5	25-33	4.01
DBH3242-140	DCK3-85	DCK3-DBH32-42	A	31	-	95.9	-	125	32-42	3.67
DBH3242-195	DCK3-140L	DCK3-DBH32-42	B	31	32.7	152.9	125	180	32-42	4.36
DBH4055-165	DCK4-100	DCK4-DBH40-55	A	39	-	119.9	-	147	40-55	4.47
DBH4055-225	DCK4-160L	DCK4-DBH40-55	B	39	42.5	179.9	132	207	40-55	4.99
DBH5270-165	DCK5-90	DCK5-DBH52-70	A	50	-	119.9	-	147	52-70	5.18
DBH5270-285	DCK5-210L	DCK5-DBH52-70	B	50	57.8	239.9	177	267	52-70	6.80
DBH6892-170	DCK6-85	DCK6-DBH68-92	A	64	-	126.9	-	156	68-92	5.88
DBH6892-385	DCK6-300L	DCK6-DBH68-92	B	64	80.5	347.9	241	371	68-92	11.81
DBH90122-185	DCK6-85	DCK6-DBH90-122	A	64	-	126.9	-	156	90-122	6.71
DBH90122-400	DCK6-300L	DCK6-DBH90-122	B	64	80.5	347.9	241	371	90-122	12.64
DBH120164-156	DCK7-85	DCK7-DBH120-164	A	90	-	131.9	-	156	120-164	9.66
DBH160204-156	DCK7-85	DCK7-DBH160-204	A	90	-	131.9	-	156	160-204	10.76

HSK-DCK

HSK-DCK Boring Adapter
HSK-DCK鏜頭刀柄



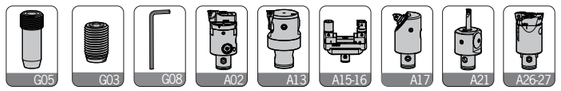

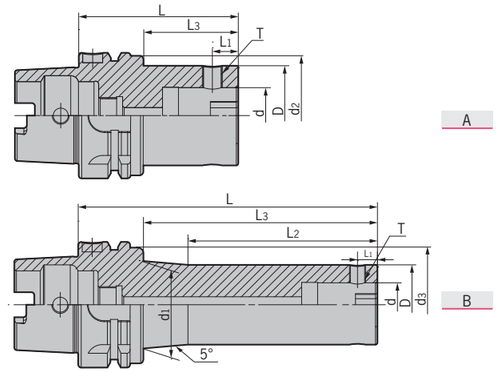

型號 Specification		圖示 Figure	D	d	d1	d2	L1	L2	L3	L	側固螺釘 Side-lock screw	L型扳手 Wrench	重量 Weight
HSK63A-	**DCK1-70**	A	19	11	-	-	5.05	-	-	70	M050Z050-30P-D	L025	0.80
	DCK1-100L	B	19	11	23.5	-	5.05	50	-	100	M050Z050-30P-D	L025	0.90
	DCK2-75	A	24	14	-	-	6.45	-	-	75	M050Z060-30P-D	L025	0.90
	DCK2-100	A	24	14	-	-	6.45	-	-	100	M050Z060-30P-D	L025	1.00
	DCK2-130L	B	24	14	31	-	6.45	65	-	130	M050Z060-30P-D	L025	1.10
	DCK3-80	A	31	18	-	-	7.9	-	-	80	M060Z090-30P-D	L03	1.00
	DCK3-100	A	31	18	-	-	7.9	-	-	100	M060Z090-30P-D	L03	1.10
	DCK3-135L	B	31	18	37	-	7.9	75	-	135	M060Z090-30P-D	L03	1.30
	DCK3-165L	B	31	18	41	-	7.9	85	-	165	M060Z090-30P-D	L03	1.40
	DCK4-70	A	39	22	-	-	10	-	-	70	M080Z120-30P-D	L04	1.00
	DCK4-100	A	39	22	-	-	10	-	-	100	M080Z120-30P-D	L04	1.30
	DCK4-150L	B	39	22	44	-	10	95	-	150	M080Z120-30P-D	L04	1.70
	DCK4-170L	B	39	22	47.5	-	10	95	-	170	M080Z120-30P-D	L04	1.90
	DCK5-80	A	50	28	-	-	13	-	-	80	M100Z160-30P-D	L05	1.40
	DCK5-100	A	50	28	-	-	13	-	-	100	M100Z160-30P-D	L05	1.80
	DCK5-150	A	50	28	-	-	13	-	-	150	M100Z160-30P-D	L05	2.20
	DCK5-180	A	50	28	-	-	13	-	-	180	M100Z160-30P-D	L05	2.70
	DCK6-100	A	64	36	-	-	16	-	-	100	M120Z200-30P-D	L06	2.20
	DCK6-150	A	64	36	-	-	16	-	-	150	M120Z200-30P-D	L06	2.80
	DCK6-180	A	64	36	-	-	16	-	-	180	M120Z200-30P-D	L06	3.30
	DCK7-110	A	90	46	-	-	19.15	-	-	110	M200Z290-30P-D	L10	3.50
	DCK7-150	A	90	46	-	-	19.15	-	-	150	M200Z290-30P-D	L10	5.20

轉下頁
See next page

HSK-DCK

HSK-DCK Boring Adapter
HSK-DCK鏜頭刀柄



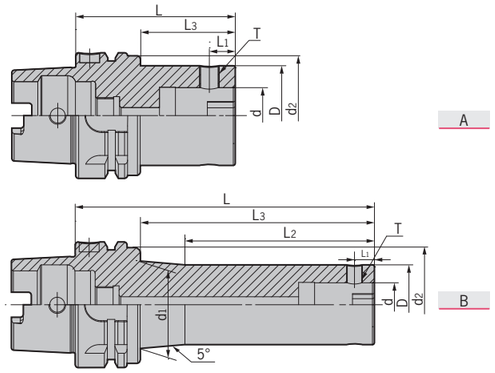

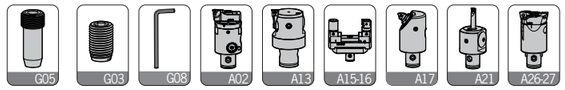

型號 Specification		圖示 Figure	D	d	d1	d2	L1	L2	L3	L	側固螺釘 Side-lock screw	L型扳手 Wrench	重量 Weight
HSK100A-	**DCK1-80**	A	19	11	-	65	5.05	-	43	80	M050Z050-30P-D	L025	2.40
	DCK1-115L	B	19	11	24	65	5.05	50	78	115	M050Z050-30P-D	L025	2.50
	DCK1-145L	B	19	11	27.5	65	5.05	60	108	145	M050Z050-30P-D	L025	2.60
	DCK2-80	A	24	14	-	65	6.45	-	43	80	M050Z060-30P-D	L025	2.45
	DCK2-105	A	24	14	-	65	6.45	-	68	105	M050Z060-30P-D	L025	2.50
	DCK2-135L	B	24	14	30	65	6.45	65	98	135	M050Z060-30P-D	L025	2.60
	DCK2-165L	B	24	14	33.5	65	6.45	75	128	165	M050Z060-30P-D	L025	2.70
	DCK3-85	A	31	18	-	65	7.9	-	46	85	M060Z090-30P-D	L03	2.60
	DCK3-110	A	31	18	-	65	7.9	-	71	110	M060Z090-30P-D	L03	2.70
	DCK3-140L	B	31	18	35.5	-	7.9	75	101	140	M060Z090-30P-D	L03	2.80
	DCK3-170L	B	31	18	41	-	7.9	85	-	170	M060Z090-30P-D	L03	2.90
	DCK4-100	A	39	22	-	-	10	-	-	100	M080Z120-30P-D	L04	2.80
	DCK4-160L	B	39	22	47	-	10	85	-	160	M080Z120-30P-D	L04	3.50
	DCK4-205L	B	39	22	50.5	-	10	110	-	205	M080Z120-30P-D	L04	4.00
	DCK5-90	A	50	28	-	-	13	-	-	90	M100Z160-30P-D	L05	3.50
	DCK5-165	A	50	28	-	-	13	-	-	165	M100Z160-30P-D	L05	4.20
	DCK5-210L	B	50	28	61	-	13	120	-	210	M100Z160-30P-D	L05	4.80
	DCK5-270L	B	50	28	69.5	-	13	130	-	270	M100Z160-30P-D	L05	5.60
	DCK6-85	A	64	36	-	-	16	-	-	85	M120Z200-30P-D	L06	4.20
	DCK6-155	A	64	36	-	-	16	-	-	155	M120Z200-30P-D	L06	5.00
	DCK6-215	A	64	36	-	-	16	-	-	215	M120Z200-30P-D	L06	5.80
	DCK6-250	A	64	36	-	-	16	-	-	250	M120Z200-30P-D	L06	6.20
	DCK6-300L	B	64	36	80	-	16	180	-	300	M120Z200-30P-D	L06	7.10
	DCK7-125	A	90	46	-	-	19.15	-	-	125	M200Z290-30P-D	L10	5.22
	DCK7-200	A	90	46	-	-	19.15	-	-	200	M200Z290-30P-D	L10	6.88
	DCK7-275	A	90	46	-	-	19.15	-	-	275	M200Z290-30P-D	L10	8.26

特 點 / Feature

■整支通孔，利于出水及抗振。■可共用并互容于大多数的"CK"系列。
■側固螺絲與鍵槽成90度，確保切削機的退刀相位。
■側固螺絲鎖固時，請使用防卡油，以免鏜孔時因扭力過大，導致螺絲卡死難以拆裝。

■The whole bar with through holes,be useful for coolant and anti-shanking. ■Be compatible with all " CK " series.
■Side lock screw is at right angles to key slot, to make sure that the replacing holders in CNC machine are always in phase.
■When side lock screw fastened, please use lubrication oil to avoid dead fastening.

BT-DCK

BT-DCK Boring Adapter
BT-DCK鏜頭刀柄



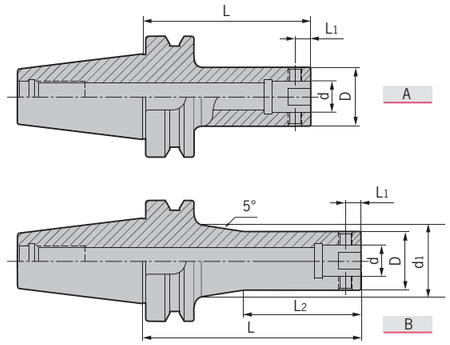

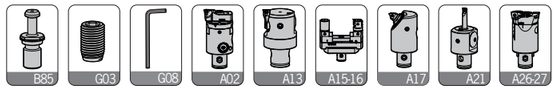

型號 Specification		圖示 Figure	D	d1	d	L1	L2	L	側固螺釘 Side-lock screw	L型扳手 Wrench	重量 Weight
BT30-	**DCK1-55**	A	19	-	11	5.05	-	55	M050Z050-30P-D	L025	0.42
	DCK1-70	A	19	-	11	5.05	-	70	M050Z050-30P-D	L025	0.45
	DCK2-80	A	24	-	14	6.62	-	80	M050Z060-30P-D	L025	0.54
	DCK3-80	A	31	-	18	8	-	80	M060Z090-30P-D	L03	0.68
	DCK4-70	A	39	-	22	10	-	70	M080Z120-30P-D	L04	0.68
	DCK5-70	A	50	-	28	13	-	70	M100Z160-30P-D	L05	0.88
	DCK6-60	A	64	-	36	16	-	60	M120Z200-30P-D	L06	0.89
BT40-	**DCK1-70**	A	19	-	11	5.05	-	70	M050Z050-30P-D	L025	1.03
	DCK1-100L	B	19	20.7	11	5.05	60	100	M050Z050-30P-D	L025	1.10
	DCK1-130L	B	19	25.5	11	5.05	60	130	M050Z050-30P-D	L025	1.18
	DCK2-75	A	24	-	14	6.62	-	75	M050Z060-30P-D	L025	1.10
	DCK2-100	A	24	-	14	6.62	-	100	M050Z060-30P-D	L025	1.18
	DCK2-130L	B	24	30	14	6.62	65	130	M050Z060-30P-D	L025	1.33
	DCK2-160L	B	24	33.6	14	6.62	75	160	M050Z060-30P-D	L025	1.49
	DCK3-80	A	31	-	18	8	-	80	M060Z090-30P-D	L03	1.22
	DCK3-100	A	31	-	18	8	-	100	M060Z090-30P-D	L03	1.32
	DCK3-135L	B	31	34.5	18	8	75	135	M060Z090-30P-D	L03	1.54
	DCK3-165L	B	31	39.7	18	8	85	165	M060Z090-30P-D	L03	1.76
	DCK4-70	A	39	-	22	10	-	70	M080Z120-30P-D	L04	1.21
	DCK4-100	A	39	-	22	10	-	100	M080Z120-30P-D	L04	1.46
	DCK4-150L	B	39	43.4	22	10	85	150	M080Z120-30P-D	L04	1.90
	DCK4-170L	B	39	46.9	22	10	95	170	M080Z120-30P-D	L04	2.16
	DCK5-60	A	50	-	28	13	-	60	M100Z160-30P-D	L05	1.22
	DCK5-80	A	50	-	28	13	-	80	M100Z160-30P-D	L05	1.52
	DCK5-100	A	50	-	28	13	-	100	M100Z160-30P-D	L05	1.80
	DCK5-150	A	50	-	28	13	-	150	M100Z160-30P-D	L05	2.52
	DCK5-180	A	50	-	28	13	-	180	M100Z160-30P-D	L05	2.90
	DCK6-55	A	64	-	36	16	-	55	M120Z200-30P-D	L06	1.22
	DCK6-100	A	64	-	36	16	-	100	M120Z200-30P-D	L06	2.29
	DCK6-150	A	64	-	36	16	-	150	M120Z200-30P-D	L06	3.50
	DCK6-180	A	64	-	36	16	-	180	M120Z200-30P-D	L06	4.22
	DCK7-100	A	90	-	46	19.15	-	100	M200Z290-30P-D	L10	3.50
	DCK7-150	A	90	-	46	19.15	-	150	M200Z290-30P-D	L10	5.50

轉下頁
See next page

BT-DCK

BT-DCK Boring Adapter
BT-DCK鏜頭刀柄



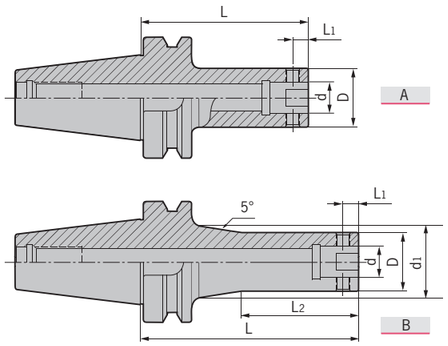

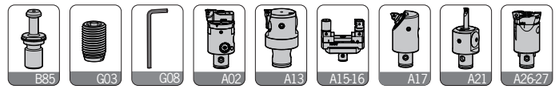

型號 Specification		圖示 Figure	D	d_1	d	L_1	L_2	L	側固螺釘 Side-lock screw	L型扳手 Wrench	重量 Weight
BT50-	**DCK1-80**	A	19	-	11	5.05	-	80	M050Z050-30P-D	L025	3.20
	DCK1-115L	B	19	20.7	11	5.05	50	115	M050Z050-30P-D	L025	3.73
	DCK1-145L	B	19	26	11	5.05	60	145	M050Z050-30P-D	L025	4.20
	DCK2-80	A	24	-	14	6.62	-	80	M050Z060-30P-D	L025	3.68
	DCK2-105	A	24	-	14	6.62	-	105	M050Z060-30P-D	L025	3.78
	DCK2-135L	B	24	26.6	14	6.62	65	135	M050Z060-30P-D	L025	3.89
	DCK2-165L	B	24	31.9	14	6.62	75	165	M050Z060-30P-D	L025	4.08
	DCK3-85	A	31	-	18	8	-	85	M060Z090-30P-D	L03	3.80
	DCK3-110	A	31	-	18	8	-	110	M060Z090-30P-D	L03	3.95
	DCK3-140L	B	31	32.7	18	8	75	140	M060Z090-30P-D	L03	4.09
	DCK3-170L	B	31	38	18	8	85	170	M060Z090-30P-D	L03	4.31
	DCK4-100	A	39	-	22	10	-	100	M080Z120-30P-D	L04	3.98
	DCK4-160L	B	39	42.5	22	10	85	160	M080Z120-30P-D	L04	4.50
	DCK4-205L	B	39	50	22	10	95	205	M080Z120-30P-D	L04	5.13
	DCK5-90	A	50	-	28	13	-	90	M100Z160-30P-D	L05	4.30
	DCK5-165	A	50	-	28	13	-	165	M100Z160-30P-D	L05	5.20
	DCK5-210L	B	50	57.8	28	13	120	210	M100Z160-30P-D	L05	5.92
	DCK5-270L	B	50	68.4	28	13	120	270	M100Z160-30P-D	L05	7.23
	DCK6-85	A	64	-	36	16	-	85	M120Z200-30P-D	L06	4.28
	DCK6-155	A	64	-	36	16	-	155	M120Z200-30P-D	L06	5.97
	DCK6-215	A	64	-	36	16	-	215	M120Z200-30P-D	L06	7.43
	DCK6-250	A	64	-	36	16	-	250	M120Z200-30P-D	L06	8.27
	DCK6-300L	B	64	80.5	36	16	160	300	M120Z200-30P-D	L06	10.21
	DCK6-350L	B	64	90	36	16	160	350	M120Z200-30P-D	L06	12.90
	DCK7-85	A	90	-	46	19.15	-	85	M200Z290-30P-D	L10	4.96
	DCK7-150	A	90	-	46	19.15	-	150	M200Z290-30P-D	L10	6.52
	DCK7-210	A	90	-	46	19.15	-	210	M200Z290-30P-D	L10	8.55
	DCK7-250	A	90	-	46	19.15	-	250	M200Z290-30P-D	L10	10.35
	DCK7-300	A	90	-	46	19.15	-	300	M200Z290-30P-D	L10	12.55
	DCK7-350	A	90	-	46	19.15	-	350	M200Z290-30P-D	L10	13.25

特 點 / Feature

■整支通孔，利于出水及抗振。■可共用并互容于大多數的"CK"系列。
■側固螺絲與鍵槽成90度，確保切削機的退刀相位。
■側固螺絲鎖固時，請使用防卡油，以免鏜孔時因扭力過大，導致螺絲卡死難以拆裝。
■The whole bar with through holes,be useful for coolant and anti-shanking. ■Be compatible for all " CK " series.
■Side lock screw is at right angles to key slot, to make sure that the replacing holders in CNC machine are always in phase.
■When side lock screw fastened, please use lubrication oil to avoid dead fastening.

SK-DCK

SK-DCK Boring Adapter
SK-DCK鏜頭刀柄



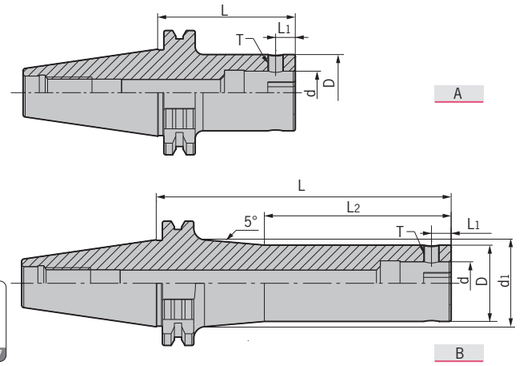

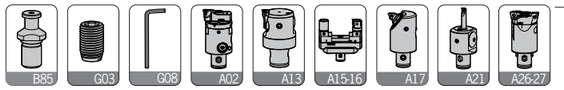

型號 Specification		圖示 Figure	D	d_1	d	L_1	L_2	L	側固螺釘 Side-lock screw	L型扳手 Wrench	重量 Weight
SK30-	**DCK1-55**	A	19	-	11	5.05	-	55	M050Z050-30P-D	L025	0.42
	DCK1-70	A	19	-	11	5.05	-	70	M050Z050-30P-D	L025	0.45
	DCK2-80	A	24	-	14	6.62	-	80	M050Z060-30P-D	L025	0.54
	DCK3-80	A	31	-	18	8	-	80	M060Z090-30P-D	L03	0.68
	DCK4-70	A	39	-	22	10	-	70	M080Z120-30P-D	L04	0.68
	DCK5-70	A	50	-	28	13	-	70	M100Z160-30P-D	L05	0.88
	DCK6-80	A	64	-	36	16	-	80	M120Z200-30P-D	L06	0.89
SK40-	**DCK1-70**	A	19	-	11	5.05	-	70	M050Z050-30P-D	L025	1.03
	DCK1-100L	B	19	20.7	11	5.05	60	100	M050Z050-30P-D	L025	1.10
	DCK2-75	A	24	-	14	6.62	-	75	M050Z060-30P-D	L025	1.10
	DCK2-100	A	24	-	14	6.62	-	100	M050Z060-30P-D	L025	1.18
	DCK2-130L	B	24	28.3	14	6.62	75	130	M050Z060-30P-D	L025	1.33
	DCK2-160L	B	24	33.6	14	6.62	75	160	M050Z060-30P-D	L025	1.49
	DCK3-80	A	31	-	18	8	-	80	M060Z090-30P-D	L03	1.22
	DCK3-100	A	31	-	18	8	-	100	M060Z090-30P-D	L03	1.32
	DCK3-135L	B	31	34.5	18	8	85	135	M060Z090-30P-D	L03	1.54
	DCK3-165L	B	31	39.7	18	8	85	165	M060Z090-30P-D	L03	1.76
	DCK4-70	A	39	-	22	10	-	70	M080Z120-30P-D	L04	1.21
	DCK4-100	A	39	-	22	10	-	100	M080Z120-30P-D	L04	1.46
	DCK4-150L	B	39	43.4	22	10	95	150	M080Z120-30P-D	L04	1.90
	DCK4-170L	B	39	46.9	22	10	95	170	M080Z120-30P-D	L04	2.16
	DCK5-80	A	50	-	28	13	-	80	M100Z160-30P-D	L05	1.52
	DCK5-100	A	50	-	28	13	-	100	M100Z160-30P-D	L05	1.80
	DCK5-150	A	50	-	28	13	-	150	M100Z160-30P-D	L05	2.52
	DCK5-180	A	50	-	28	13	-	180	M100Z160-30P-D	L05	2.90
	DCK6-90	A	64	-	36	16	-	90	M120Z200-30P-D	L06	1.22
	DCK6-150	A	64	-	36	16	-	150	M120Z200-30P-D	L06	3.50
	DCK6-180	A	64	-	36	16	-	180	M120Z200-30P-D	L06	4.22
	DCK7-100	A	90	-	46	19.15	-	100	M200Z290-30P-D	L10	3.50
	DCK7-150	A	90	-	46	19.15	-	150	M200Z290-30P-D	L10	5.50

轉下頁
See next page

SK-DCK

SK-DCK Boring Adapter
SK-DCK鏜頭刀柄



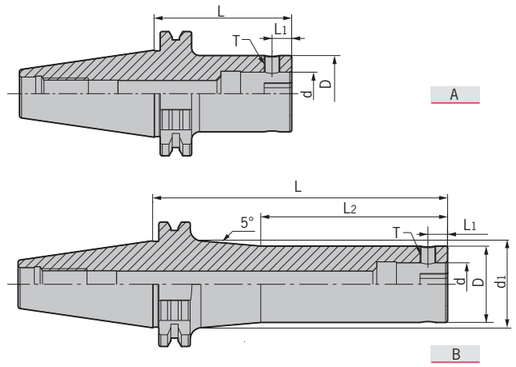

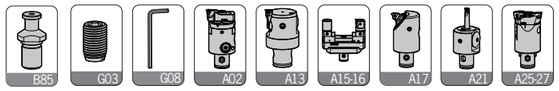

型號 Specification		圖示 Figure	D	d_1	d	L_1	L_2	L	側固螺釘 Side-lock screw	L型扳手 Wrench	重量 Weight
SK50-	**DCK1-80**	B	19	20.7	11	5.05	-	80	M050Z050-30P-D	L025	3.60
	DCK1-115L	B	19	20.7	11	5.05	60	115	M050Z050-30P-D	L025	3.73
	DCK1-145L	B	19	26	11	5.05	60	145	M050Z050-30P-D	L025	4.20
	DCK2-80	A	24	-	14	6.62	-	80	M050Z060-30P-D	L025	3.60
	DCK2-105	A	24	-	14	6.62	-	105	M050Z060-30P-D	L025	3.78
	DCK2-135L	B	24	26.6	14	6.62	75	135	M050Z060-30P-D	L025	3.89
	DCK2-165L	B	24	31.9	14	6.62	75	165	M050Z060-30P-D	L025	4.08
	DCK3-85	A	31	-	18	8	-	85	M060Z090-30P-D	L03	3.80
	DCK3-110	A	31	-	18	8	-	110	M060Z090-30P-D	L03	3.95
	DCK3-140L	B	31	32.7	18	8	85	140	M060Z090-30P-D	L03	4.09
	DCK3-170L	B	31	38	18	8	85	170	M060Z090-30P-D	L03	4.31
	DCK4-100	A	39	-	22	10	-	100	M080Z120-30P-D	L04	3.98
	DCK4-160L	B	39	42.5	22	10	95	160	M080Z120-30P-D	L04	4.50
	DCK4-205L	B	39	50	22	10	95	205	M080Z120-30P-D	L04	5.13
	DCK5-90	A	50	-	28	13	-	90	M100Z160-30P-D	L05	4.30
	DCK5-165	A	50	-	28	13	-	165	M100Z160-30P-D	L05	5.20
	DCK5-210L	B	50	57.8	28	13	120	210	M100Z160-30P-D	L05	5.92
	DCK5-270L	B	50	68.4	28	13	120	270	M100Z160-30P-D	L05	7.23
	DCK6-85	A	64	-	36	16	-	85	M120Z200-30P-D	L06	4.28
	DCK6-155	A	64	-	36	16	-	155	M120Z200-30P-D	L06	5.97
	DCK6-215	A	64	-	36	16	-	215	M120Z200-30P-D	L06	7.43
	DCK6-250	A	64	-	36	16	-	250	M120Z200-30P-D	L06	8.27
	DCK6-300L	B	64	80.5	36	16	160	300	M120Z200-30P-D	L06	10.21
	DCK7-85	A	90	-	46	19.15	-	85	M200Z290-30P-D	L10	4.96
	DCK7-150	A	90	-	46	19.15	-	150	M200Z290-30P-D	L10	6.52
	DCK7-210	A	90	-	46	19.15	-	210	M200Z290-30P-D	L10	8.55
	DCK7-250	A	90	-	46	19.15	-	250	M200Z290-30P-D	L10	10.35
	DCK7-300	A	90	-	46	19.15	-	300	M200Z290-30P-D	L10	12.55
	DCK7-350	A	90	-	46	19.15	-	350	M200Z290-30P-D	L10	13.25

特 點 / Feature

■整支通孔，利于出水及抗振。■可共用并互容于大多數的"CK"系列。
■側固螺絲與鍵槽成90度，確保切削機的退刀相位。
■側固螺絲鎖固時，請使用防卡油，以免鏜孔時因扭力過大，導致螺絲卡死難以拆裝。
■The whole bar with through holes,be useful for coolant and anti-shanking. ■Be compatible with all " CK " series.
■Side lock screw is at right angles to key slot, to make sure that the replacing holders in CNC machine are always in phase.
■When side lock screw fastened, please use lubrication oil to avoid dead fastening.

BST/NBH2084

BST Boring Adapter
BST鏜頭刀柄



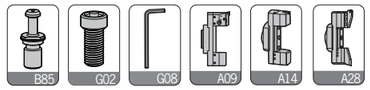

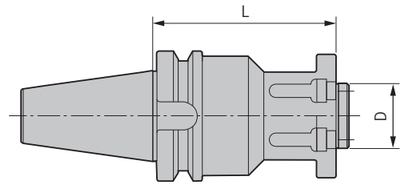

型號 Specification		D	L	緊固螺釘 Locking screw	重量 Weight
HSK100A-	**BST-100**	50	100	E120U400-D	3.96
	BST-150	50	150	E120U400-D	4.59
	BST-200	50	200	E120U400-D	5.48
	BST-250	50	250	E120U400-D	7.52
	BST-300	50	300	E120U400-D	10.32
BT40-	**BST-100**	50	100	E120U400-D	2.90
	BST-150	50	150	E120U400-D	4.24

型號 Specification		D	L	緊固螺釘 Locking screw	重量 Weight
BT50-	**BST-100**	50	100	E120U400-D	5.50
	BST-150	50	150	E120U400-D	6.38
	BST-200	50	200	E120U400-D	7.61
	BST-250	50	250	E120U400-D	10.44
	BST-300	50	300	E120U400-D	12.37
	BST-350	50	350	E120U400-D	14.33
SK50-	**BST-100**	50	100	E120U400-D	5.50
	BST-150	50	150	E120U400-D	6.38
	BST-200	50	200	E120U400-D	7.61

NBH2084 Boring Adapter
NBH2084鏜頭刀柄



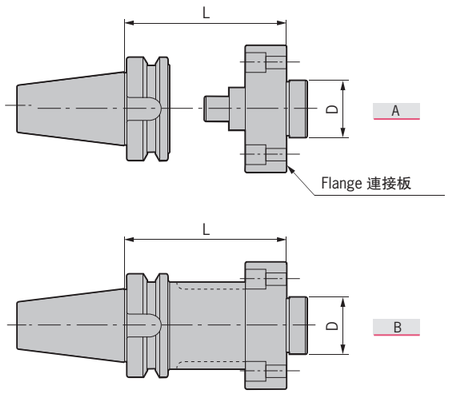

型號 Specification		D	L	鎖緊螺釘 Locking screw	L型扳手 Wrench	重量 Weight
BT40-NBH-A50		35	50	E080U200-D	L06	1.78
BT50-NBH-A50		35	50	E080U200-D	L06	4.16
NBH-FP60		35	Flange	E080U200-D	L06	0.60
BT40-NBH-B100		35	100	E080U300-D	L06	2.23
BT50-NBH-B100		35	100	E080U300-D	L06	4.84

型號 Specification		D	L	鎖緊螺釘 Locking screw	L型扳手 Wrench	重量 Weight
BT50-	**NBH-B165**	35	165	E080U300-D	L06	6.23
	NBH-B200	35	200	E080U300-D	L06	7.01
	NBH-B250	35	250	E080U300-D	L06	7.96
	NBH-B300	35	300	E080U300-D	L06	9.07

DSCK/DCK-ABS

DSCK Carbide Boring Arbor
DSCK抗振鎢鋼鏜頭刀柄



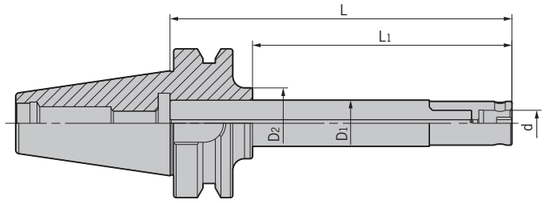

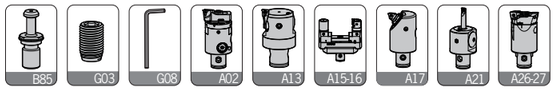

型號 Specification		D1	D2	d	L1	L	側固螺釘 Side-lock screw	重量 Weight
BT40-	DSCK1-150	19.5	30	11	115	150	M050Z050-30P-D	1.56
	DSCK2-190	24	35	14	155	190	M050Z050-30P-D	1.92
BT50-	DSCK1-150	19.5	30	11	115	150	M050Z050-30P-D	4.07
	DSCK2-200	24	35	14	155	200	M050Z050-30P-D	4.84
	DSCK3-230	31	42	18	185	230	M060Z075-30P-D	5.28
	DSCK4-300	40	50	22	255	300	M080Z075-30P-D	6.60

注意：標準報價不含CBH鏜頭，需另外單獨購買。
Notice:Quotation not included CBH boring head, shall be ordered separately.

Adapter from DCK to ABS Type Connection
DCK-ABS接口轉換接柄

NEW



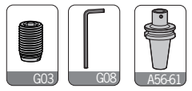

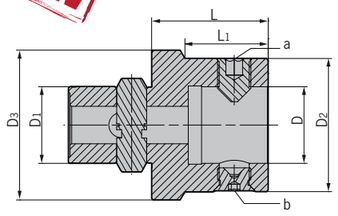

型號 Specification		D	D1	D2	D3	L	L1	a	b	L型扳手 Wrench	重量 Weight
DCK	2-ABS25	13	14	25	24	35	20	M060Z085P-W	M060Z050P-N	L03	0.10
	3-ABS32	16	18	32	31	40	25	M080Z110P-W	M080Z065P-N	L04	0.12
	4-ABS40	20	22	40	39	45	30	M100Z140P-W	M100Z080P-N	L05	0.29
	5-ABS50	28	28	50	50	50	35	M120Z165P-W	M120Z085P-N	L06	0.65
	6-ABS63	34	36	63	64	55	40	M160Z205P-W	M160Z120P-N	L08	1.65
	6-ABS80	46	36	80	64	60	45	M200Z260P-W	M200Z138P-N	L10	2.23
	7-ABS80	46	46	80	90	70	55	M200Z260P-W	M200Z138P-N	L10	2.88

注意：此轉換接柄用于把ABS接口鏜頭安裝于DCK接口的鏜刀柄上。
Notice:With this adapter, DCK boring holder can assemble boring tools with ABS connection.

DCK

DCK Extension
DCK等徑延長接柄



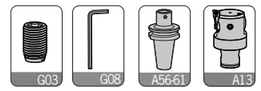

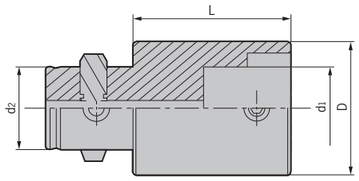

型號 Specification		D	d1	d2	L	側固螺釘 Side-lock screw	L型扳手 Wrench	重量 Weight
DCK	1-1-30	19	11	11	30	M050Z050-30P-D	L025	0.06
	2-2-30	24	14	14	30	M050Z060-30P-D	L025	0.09
	3-3-30	31	18	18	30	M060Z090-30P-D	L03	0.14
	4-4-45	39	22	22	45	M080Z120-30P-D	L04	0.29
	4-4-60	39	22	22	60	M080Z120-30P-D	L04	0.47
	5-5-60	50	28	28	60	M100Z160-30P-D	L05	0.75
	5-5-90	50	28	28	90	M100Z160-30P-D	L05	1.18
	6-6-60	64	36	36	60	M120Z200-30P-D	L06	1.46
	6-6-100	64	36	36	100	M120Z200-30P-D	L06	2.35
	7-7-105	90	46	46	105	M200Z300-30P-D	L10	5.28

DCK Reducer
DCK异徑轉換接柄（大接小）



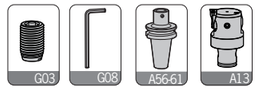

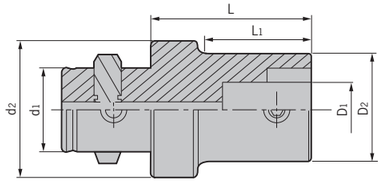

型號 Specification		D1	D2	d1	d2	L1	L	側固螺釘 Side-lock screw	L型扳手 Wrench	重量 Weight
DCK	2-1-36	11	19	14	24	30	36	M050Z050-30P-D	L025	0.08
	3-1-41	11	19	18	31	30	41	M050Z050-30P-D	L025	0.12
	3-2-37	14	24	18	31	25	37	M050Z060-30P-D	L025	0.13
	4-1-58	11	19	22	39	40	58	M050Z050-30P-D	L025	0.24
	4-2-50	14	24	22	39	36	50	M050Z060-30P-D	L025	0.22
	4-3-50	18	31	22	39	37	50	M060Z090-30P-D	L03	0.30
	5-1-60	11	19	28	50	40	60	M050Z050-30P-D	L025	0.38
	5-2-54	14	24	28	50	35	54	M050Z060-30P-D	L025	0.38
	5-2-74	14	24	28	50	55	74	M050Z060-30P-D	L025	0.45
	5-3-47	18	31	28	50	29	47	M060Z090-30P-D	L03	0.46
	5-3-72	18	31	28	50	54	72	M060Z090-30P-D	L03	0.54
	5-4-42	22	39	28	50	25	42	M080Z120-30P-D	L04	0.43
	5-4-67	22	39	28	50	50	67	M080Z120-30P-D	L04	0.62
	6-1-70	11	19	36	64	40	70	M050Z050-30P-D	L025	0.90
	6-2-63	14	24	36	64	45	63	M050Z060-30P-D	L025	0.66
	6-2-93	14	24	36	64	75	93	M050Z060-30P-D	L025	0.71
	6-3-56	18	31	36	64	39	56	M060Z090-30P-D	L03	0.70
	6-3-96	18	31	36	64	79	96	M060Z090-30P-D	L03	0.91
	6-4-51	22	39	36	64	35	51	M080Z120-30P-D	L04	0.76
	6-4-101	22	39	36	64	85	101	M080Z120-30P-D	L04	1.19
	6-5-41	28	50	36	64	25	41	M100Z160-30P-D	L05	0.72
	6-5-91	28	50	36	64	75	91	M100Z160-30P-D	L05	1.46
	7-6-106	36	64	46	90	99	106	M120Z200-30P-D	L06	3.12

SCB/SSB

SCB Solid Carbide Boring Holder
SCB超硬整體碳化鎢鋼鏜刀杆



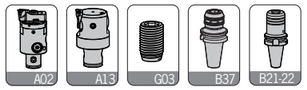

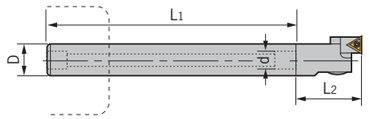

型號 Specification		D	d	L1	L2	組合鏜頭 Boring head	鏜孔範圍 Boring range	重量 Weight
SCB-	C19-DCK1-150	19	11	150	32.5	CBH20-36	20-36	0.50
	C19-DCK1-200	19	11	200	32.5			0.70
	C19-DCK1-250	19	11	250	32.5			0.90
	C24-DCK2-200	24	14	200	35.5	FBH25/CBH25-47	29-38/25-47	1.00
	C24-DCK2-250	24	14	250	35.5			1.20
	C24-DCK2-300	24	14	300	35.5			1.50
	C31-DCK3-250	31	18	250	40	FBH32/CBH32-60	36-52/32-60	1.80
	C31-DCK3-300	31	18	300	40			2.20
	C31-DCK3-400	31	18	400	40			3.00

特 點 / Feature

■超硬碳化鎢制鏜刀杆，使用高韌性配方制造，堅韌耐用，實現高硬度、高剛性、高抗震性，可施行超深孔加工（8D）。
■各種規格均有內部水孔，深孔加工時排屑及冷却效果良好。
■直柄結構，加工深度可依加工需求自行調整。

■Solid tungsten carbide holder provides high rigidity, strong shaking resistance and deep boring depth(≤8D).
■Good chip remove and cooling performance due to internal cooling hole design.
■Straight shank makes the setting of boring depth easy.

SSB Boring Holder
SSB直柄鏜刀杆



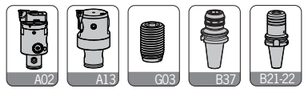

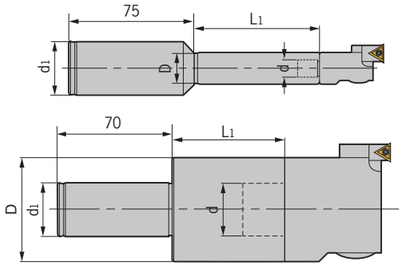

型號 Specification		D	d	d1	L1	組合鏜頭 Boring head	重量 Weight
SSB-	C32-DCK1-75	19	11	32	75	CBH20-36、DYD20-22、DYD22-29	0.52
	C32-DCK2-70	24	14	32	70	FBH25、CBH25-47、DBH25-33、DYD29-38	0.59
	C32-DCK2-120	24	14	32	120		0.85
	C32-DCK3-70	31	18	32	70	FBH32、CBH32-60、DBH32-42、DYD38-50	0.73
	C32-DCK3-120	31	18	32	120		1.01
	C32-DCK4-60	39	22	32	60	FBH40、CBH41-74、DBH40-55、DYD48-65	0.77
	C32-DCK4-110	39	22	32	110		1.19
	C32-DCK5-60	50	28	32	60	FBH50、CBH53-95、DBH52-70、DYD62-90	1.02
	C32-DCK5-120	50	28	32	120		1.89
	C32-DCK6-60	64	36	32	60	FBH63、FBH80、CBH68-150、CBH100-203、DBH68-92、DBH90-122、DYD82-110、DYD105-140、DYD135-175	1.42
	C32-DCK6-120	64	36	32	120		2.20

CR/DCK

CR Chamfering Cutter
CR倒角刀

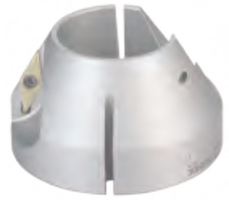



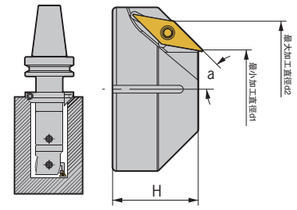

安裝在DCK刀柄上用于鏜孔,倒角復合加工。Assembled with DCK boring tools to chamfer.

型號 Specification		刃數 Teeth	角度 a	d1	d2	H	組合刀柄 Adapter size	L型扳手 Wrench	刀體鎖緊螺釘 Locking screw	刀片型號 Insert	刀片螺釘 Insert screw	旗形扳手 Wrench	重量 Weight
CR	1-34-45	1	45	21	34	22	DCK1	L04	E050U160-D	VCGT110302	M025W060	Q08	0.06
	2-39-45	1	45	26	39	25	DCK2	L04	E050U160-D	VCGT110302	M025W060	Q08	0.12
	3-54-45	1	45	34	54	35	DCK3	L05	E060U200-D	VCGT160404	M040S100-1	Q15	0.51
	4-62-45	1	45	42	62	38	DCK4	L05	E060U200-D	VCGT160404	M040S100-1	Q15	0.69
	5-93-45	2	45	53	93	43	DCK5	L05	E060U250-D	VCGT160404	M040S100-1	Q15	1.33
	6-107-45	2	45	67	107	46	DCK6	L06	E080U250-D	VCGT160404	M040S100-1	Q15	1.84
	6-138-45	2	45	98	138	46	DCK6	L06	E080U250-D	VCGT160404	M040S100-1	Q15	3.86
	6-160-45	2	45	120	160	46	DCK6	L06	E080U250-D	VCGT160404	M040S100-1	Q15	5.58
CR	1-41-30	2	30	23	41	30	DCK1	L04	E050U160-D	VCGT110302	M025W060	Q08	0.10
	2-46-30	2	30	28	46	35	DCK2	L04	E050U160-D	VCGT110302	M025W060	Q08	0.21
	3-53-30	2	30	35	53	35	DCK3	L05	E060U200-D	VCGT110302	M025W060	Q08	0.34
	4-61-30	2	30	43	61	35	DCK4	L05	E060U200-D	VCGT110302	M025W060	Q08	0.41
	5-84-30	2	30	56	84	48	DCK5	L06	E080U250-D	VCGT160404	M040S100-1	Q15	1.33
	6-98-30	2	30	70	98	48	DCK6	L06	E080U250-D	VCGT160404	M040S100-1	Q15	1.21
	6-120-30	2	30	92	120	48	DCK6	L06	E080U250-D	VCGT160404	M040S100-1	Q15	3.01
	6-142-30	2	30	114	142	48	DCK6	L06	E080U250-D	VCGT160404	M040S100-1	Q15	4.09

適用 Suitable:德克、京瓷或三菱刀片 DEREK、KYOCERA Or MITSUBISHI Insert

DCK Chamfering Head
DCK倒角刀頭



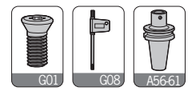

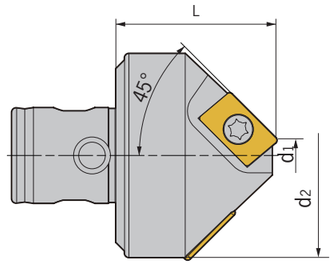

安裝在DCK刀柄上用于倒角加工。Connected with DCK boring apapter for chamfering.

型號 Specification		刃數 Teeth	d1	d2	L	組合刀柄 Adapter size	刀片型號 Insert	刀片螺釘 Insert screw	旗形扳手 Wrench
DCK	2-0522	1	5	22	25	DCK2	ADNT160308	M040S100-1	Q15
	4-1046	2	10	46	36	DCK4	ADNT160308	M040S100-1	Q15
	5-3065	2	30	65	50	DCK5	ADNT160308	M040S100-1	Q15
	6-63100	2	63	100	60	DCK6	ADNT160308	M040S100-1	Q15

適用 Suitable:日立刀片 HITACHI Insert



Customized Tools with Indexable Inserts
機夾式非標刀具定制

與傳統刀具截然不同的，用于數控加工的最高效刀具
Differ from traditional tools, most efficient NC cutting tools

機夾非標刀具可以選擇帶刀座的型號。通過連成一體的刀杆和刀座，一體型的刀具避免在使用中的兩次裝夾，從而基本消除了裝夾誤差。選用帶刀座的機夾式刀具可提高加工精度。

現代化加工中機夾式非標刀具是最佳伙伴，在批量生產中可最大限度提高設備使用效率。

The tool and the holder of the integrated NC tool are unified as a whole to avoid two-stage and even three-stage clamping which the usual tool uses in the machining.

It helps a customer to achieve the highest-precision machining target and utmost work efficiency in mass production.

特 點 / Feature

■可換式刀片
根據客户需要提供各種替換式刀片，當刀片磨損時，衹需更換即可。
■微調單元
更接近客户需求對高精度的刃部提供微調結構。高性能的微調結構是刀具反復使用後仍能保證精度。
■多款刀柄系統
可以從包括液壓、熱脹在内的不同刀柄前端和包括HSK\BT兩種的刀柄後端任意定制刀柄系統，滿足不同加工設備需求。
■刀片定制
根據客户需求，可以實現復雜刃口的成型刀片和PCD\CBN刀片等各種復雜的組合非標加工。

■Indexable Inserts
Special indexable inserts can be supplied according to customers' requirements.
■Adjustable Frames
Supply adjustable frames for insert pocket to get a high repeatability.
■Kinds Of Adapter System
To meet different manufacturing machines, we can design and customize sorts of holder structures including shrink fit chuck and hydraulic chuck, with different chuck, such as HSK and BT.
■Customized Inserts
On request, customized inserts are available, including ground inserts with sophisticated cutting edge and PCD/CBN inserts.



Integrated Special Tools
整體刀具非標定制

廣泛應用于制造行業中的非標精密刀具
Widely used in the manufacturing industry

整體型非標刀具是一種直接由整根棒料加工而成的傳統刀具，其切削刃與刀杆部分連成一體。它不但能應付絶大部分的加工，而且可以通過重復使用來降低刀具成本。客户衹需提供圖紙、樣刀或被加工零件即可獲得德克爲客户生産適用于鑽、鉸、銑、車、鏜和其他特殊加工在内的所有種類非標刀具。

二十多年的刀具生産經驗，德克奠定了堅實的非標生産基礎，爲包括汽車、航天、醫療與其他制造業的客户提供各種加工的整體定制刀具。通過縮減成本，使用批量的整體定制非標能給客户的生産加工帶來實際效益。

Derek designs the most suitable tool structure, covering the tip type, the cooling method, the geometric shape, the processing parameter, etc.) specially for each type of a customer's tool based on the material of the processed and the customer's real processing conditions whether it is drilling, milling, reaming, boring or any other machining, so as to meet different customers' diversified demands for machining precision, smooth finish, processing efficiency and tool service life.

Based on two decades' manufacturing experience, Derek's excellent production techniques guarantees the quality of special tools, which are extensively used in metalworking of automobile, aeronautics and astronautics, medical and equipment manufacture industries.Special tools bring down the production cost in mass production dramatically.

特 點 / Feature

■階梯處理
充分考慮機械性能的前提下，根據客户需求可以定制多個階梯。多階梯刀具一次加工不但縮短加工時間，還能確保最佳同心度。
■成型刀刃
爲了成型加工，根據客户的需求制定特定形狀。完成標準刀具無法完成的復雜加工。
■刃口優化
根據加工需求對刃口進行優化，獲得更低的切削阻力、更長的刀具壽命和更好的加工精度。
■槽型設計
對封閉加工用刀具的排屑槽進行特殊優化。優化後的槽體能加强排屑、幫助切削刃散熱并減少失效狀況的發生。

■Stepped Cutting
Taking cutting condition and work piece into consideration, a stepped special tool can be designed and produced, which not only shortens the processing time but also increases the cutting performance.
■Special Cutting Edge
A special cutting edge can be achieved
on customers' demand, to finish the sophisticated machining.
■Optimized Cutting Edge
Optimized Cutting edge promises a smaller cutting resistance, a longer tool life and a better surface performance.
■Unique Chipbreaker Design
Special design and optimize the chipbreaker for those tools used in a close cutting condition, which makes the chip-removal easier, cutting edge cooler, and more valid machining.



Customized PCD Cutting Tools
PCD刀具非標定制

具有極佳切削性能與使用壽命的新一代精密刀具。
With extraordinary cutting performance and tool life.

金剛石刀具是一種由硬質合金刀杆和金剛石刀刃組合而成的新型刀具，其切削刃由金剛石構成。金剛石分爲人造聚晶金剛石和天然單晶金剛石。它們是自然界已知硬度最高的物質，因此由其制作而成的刀具在使用壽命上往往超出傳統硬質合金刀具數倍。金剛石刀具具有極高的硬度。

超高的導熱性和極低的摩擦系數，這使得金剛石刀具擁有極其優异的切削性能。

The artificial polycrystalline diamond and the natural monocrystalline diamond are the known materials with the highest hardness in the nature. The tools made of these two materials enjoy a much longer service life than usual cemented carbide tools. The diamond tool, equipped with high hardness and thermal conductivity as well as low frictional factor, boasts its outstanding cutting performance.

特 點 / Feature

■超長壽命
使用壽命遠長于普通刀具，爲客户省去反復換刀及反復修磨的時間，減少成本和精力。
■刀刃PCD成型
爲了成型加工，根據客户的需求制定特定形狀。成型用PCD定制刀具的加工壽命往往長達上萬次。
■鏡面加工
根據客户需要，PCD加工後的表面可獲得很高的光潔度和平整度，甚至達到鏡面效果，可省去拋光工序。
■超强性能
因摩擦系數最小、導熱性能最佳，金剛石非標刀具可以大大提高加工速度并勝任整體式刀具無法完成的加工。
■附加斷屑
根據具體加工需求，可以提供額外的斷屑槽，獲得更好的加工效果并防止切屑損傷已加工表面。

■Superior Tool Life
Compared with the usual tools, PCD tools enjoy a superior tool life, which reduces the production cost dramatically.
■Ground PCD Edges
The cutting edge of PCD is ground to the special shape to meet an unique metalworking requirement. The tool life can be more than 10,000 times.
■Mirror Effect
The surface processed by the PCD tool is always very flat and smooth just like a mirror because of the super-high rotation speed of the PCD tool, which leaves out the customer's polishing procedure.
■Extraordinary Performance
With high hardness and thermal conductivity as well as low frictional factor, boasts its outstanding cutting performance, which makes it the only choice in some machining solutions.
■ Extra Chipbreaker
According to a specific cutting condition, PCD tools with special chipbreakers are available. And it results in a better cutting performance.



Turn Key Project
項目方案打包

各種難題，我們統統打包。

通常情況下，加工一個簡單的小型零件平均需要 4–5 把標準、非標刀具；而加工、裝配一個復雜的大型零部件往往需要 20 把以上的刀具。一個極端的例子是飛機制造：生產一架飛機需要使用上千種不同刀具。如果客户同時需要生產 5 種零部件，那麽就必須挑選 100 種不同刀具。德克可以爲您精挑細選、化繁爲簡，讓復雜的操作以簡單方式實現。

憑借二十多年的專業刀具生產經驗，擁有各種不同的高端加工設備，强大的技術力量和服務團隊，德克能提供一站式的項目解決方案。衹需提供被加工工件的零件圖紙或樣品，我們就可以提供一整套完整的加工方案，無論是標準刀具還是非標定制刀具以及各種加工耗材，我們都會設身處事的考慮各種狀況，包括客户設備、加工環境、交貨期等等，以最佳方式交給客户手上使用。

Whatever the project is, we are going to take over it.

Usually, it takes about 4-5 usual and special tools to machine one small and simple work piece. However, it asks for more than 20 pcs of tools for a sophisticated component. Let's take the airplane manufacturing as an example. Thousands
of tools are required during the manufacturing. If one factory wants to produce 5 pcs of work piece at one time, then they have to choose about 100 different tools to finish the work. Derek is ready to offer you well selected tools to finish your work efficiently.

On the basis of two decades' manufacturing experience, equipped with state-of-the art manufacturing machines, Derek's professional technical staff and service personnel are ready to offer you one-stop service for your project and metal-working
demand. On receipt of your drawings of work piece to be machined, we will supply you a full machining solution, including standard tools, special tools, and inserts, which will fulfill your requirement , such as production machines, working environment,
lead time of work piece, etc.

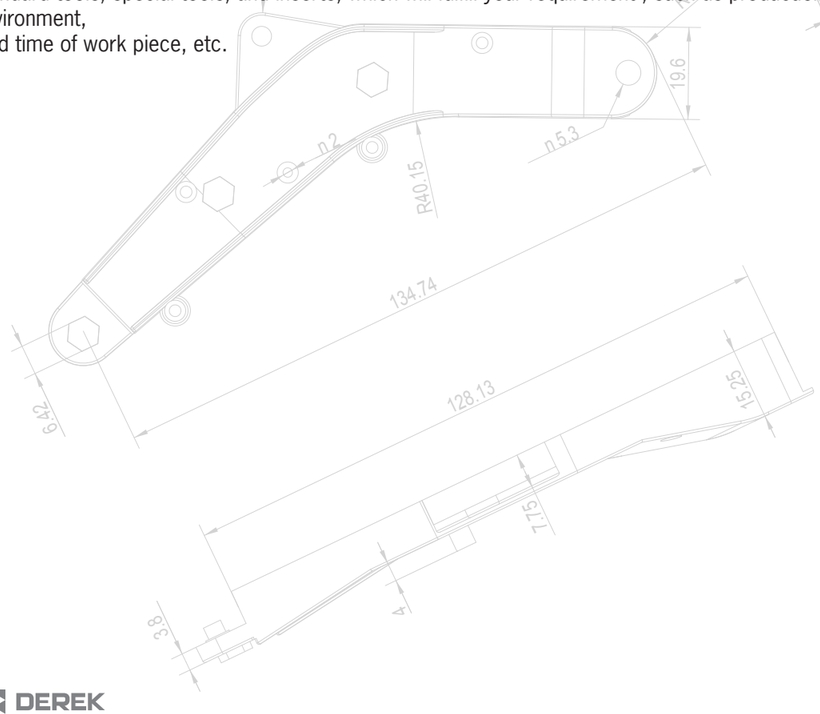

Tool Presetter
刀具設定儀

用途 / Functions

■本儀器系集光、機、電于一體的刀具預調設備。主要用于量測鏜床、數控加工中心等制造上所使用的鏜銑類切削刀具之孔徑及刀具之預調儀器。

■This tool pre-setter is optical, mechanical and electrical, used for measuring and pre-setting cutting tools for boring machine and machining centers.

特 點 / Feature

■儀器主軸爲“鎖定裝置”設計，操作容易、便利;
■主軸可依對同規格之刀具來測量（BT50,BT40,BT30）而選擇不同的轉換套做轉換;
■X、Y軸均采用光學尺裝置來預示測量之數值;
■儀器附有兩組手動旋轉裝置。

■The spindle of this tool pre-setter is with Locking Design, user-friendly and convenient;
■The spindle could be used to measure different types (BT30, BT40, BT50) of tools with different adapters;
■X-axial and Y-axial measure size optically;
■This tool pre–setter is with two sets of manual device standby.



型號 Specification	電源 Power	測量範圍 Measuring range	數據解析度 Resoltion	主軸錐度 Testing bar	外觀尺寸 Dimension LxWxH(mm)	重量 Weight
DK-300	AC110V/220V 50HZ/60HZ	直徑（X向）300mm 高度（Z向）30-400mm	X軸0.005mm Z軸0.005mm	標準配備BT50 選配optional HSK50/63/100 BT40/30 SK40/30	860x560x990	102
DK-400	AC110V/220V 50HZ/60HZ	直徑（X向）400mm 高度（Z向）30-400mm	X軸0.005mm Z軸0.005mm	標準配備BT50 選配optional HSK50/63/100 BT40/30 SK40/30	930x600x950	108
DK-600	AC110V/220V 50HZ/60HZ	直徑（X向）600mm 高度（Z向）30-600mm	X軸0.005mm Z軸0.005mm	標準配備BT50 選配optional HSK50/63/100 BT40/30 SK40/30	1070x680x1050	125

Testing Bar
機床主軸跳動測試棒

型號 Specification	D	L	L_1
HSK 50-200	32	200	170
63-250	40	250	220
100-260	50	260	225
BT 30-200	32	200	190
40-250	40	250	240
50-260	40	260	250
SK 30-200	32	200	190
40-250	40	250	240
50-260	40	260	250

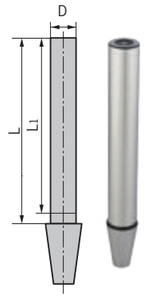

Adapter
變徑轉換套

型號 Specification
HSK 100-50
100-63
BT 50-30
50-40
SK 50-30
50-40



Operating Instructions
注意事項

A.爲使本儀充分發揮功能，敬請詳閱以下的操作説明，確保本儀器的準確性
Before operating, please read following points carefully:

■檢查木箱在運輸中是否受損，并檢查儀器外觀是否良好;
■拆箱後請將地盤固定螺絲鬆脱，并鎖上隨機附送的調整螺絲;
■請確保清洗防銹油，切記不可使用汽油、丙酮類溶劑。
■Check if the package is intact and presetter is in good condition;
■Unfasten the set screws, and fasten it with adjusting screws included in package;
■Clean with anti-rust oil. No gasoline, nor any solvent with acetone.

B.操作前請確認下列事項:
Checking the following points before operating:

■鬆開X軸固定螺絲。（請參照本儀器上黄色貼紙）;
■鬆開Z軸固定配重塊螺絲。（請參考本儀器上黄色貼紙）;
■檢查潤滑系統是否正常;
■主軸務必確保清潔;
■測試棒擦拭幹净。
■上述4.5兩項于每次操作前必須徹底清潔，使用後請保持防銹及清潔雜物、灰塵、鐵屑等。
■Unfasten the set screw on X axis (See yellow pasters on this equipment);
■Unfasten the set screw on Z axis (See yellow pasters on this equipment);
■Check the lubrication system;
■Clean the spindle;
■Clean the test bar;
■Before every operation, Procedures 4 and 5 aforementioned shall be done.

C.操作中注意事項:
Notices:

■本儀器Z軸升降時爲手動快速移位裝置;
■操作Z軸快速移位時請勿大力拉扯，請將把手往内壓下，在移至接近刀具時，再使用微調手輪;
■量測刀具時請以刀背接觸測頭，避免損壞測頭及量表。
■Move the Z-axis with one hand;
■No pulling nor pushing Z-axis brutally; Please push the Z-axis gently approaching the tool and then micro adjust with one hand;
■Please don't touch probe with the cutting edge to avoid any damage to probe and meter.

D. X軸歸零“0”:
Return X-axis to Zero:

■請同時拭擦清潔主軸及測試棒;
■將Z軸(升降)百分表架，向順時針方向移90度，以免X軸歸“0”時撞擊測試棒;
■將X軸量表測頭調至接觸測試棒，使量表指針向順時針方向接觸第一個0的位置;
■將X軸顯示數據設定爲舉測試棒半徑尺寸相同之數字，即完成歸0。
■Clean the spindle and test bar;
■Move Z-axis to an angle of 90 in clock-wise direction, to avoid the bump between test bar and X-axis;
■Adjust the probe of X-axis to the test bar and make indicator touch the "0" in clock-wise direction;
■Set the display data of X-axial same as the radius of testing bar, which means it is ready for testing.

E.量測程序:
Measuring procedures:

■測試棒之歸“0”動作務必落實、確定;
■將刀具置入主軸，并用鎖緊螺帽固定住;
■旋轉主軸，使刀具之刀尖接觸到X軸測頭，讓量表指針轉至第一個0的位置;
■于顯示器上設定刀具所需之尺寸，X軸請輸入半徑值，此時即完成刀具預調值;
■取下刀具時，請以逆時針方向鬆脱主固定螺帽。
■Make sure X-axis to Zero;
■Lock the tool with set screw on Z-axis;
■Move the spindle and make the cutting edge touch the probe of X-axis. Indicator points to the first Zero position;
■Set the required sizes of tools and the value of radius on X-axis;
■Unfasten the locking nut anti-clock-wisely and dismantle the tool.

FBH

FBH Micro-Boring Head Manuals
FBH極細微調精鏜刀使用説明書

一、安裝精鏜刀片座、精鏜刀杆、刀片:
Installation Of Insert Holder, Boring Bars And Inserts

1、精鏜刀片座安裝：將刀片座和鏜頭安裝部分擦拭幹净。刀片座底部與鏜頭安裝面帖合，確定無間隙後，擰緊刀片座鎖緊螺釘。 安裝反鏜刀座可實現反鏜加工。
1.Clean the mounting surface of insert holder and boring body;Mount the insert holder while Make sure there is no gap and misalignment between insert holder and boring body;Fasten the locking screw properly.

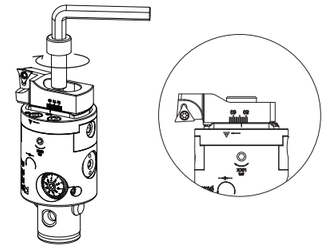

2、鏜刀杆安裝：先行拆除精鏜刀片座。鬆開BM中心銷側固螺釘，取出BM中心銷。選取精鏜刀杆確定安裝方向，置入精鏜頭内，確定無間隙後，擰緊BM中心銷側固螺釘。
2. Loosen the locking screw to center pin BM and get it out of boring body. Insert the very boring bar in a right direction and tighten the l ocking screws properly.

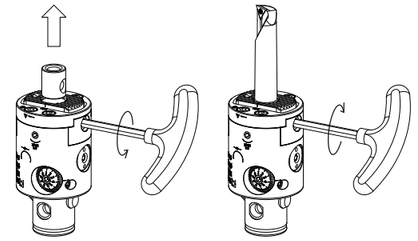

3、刀片安裝：將刀片裝入刀片座内，注意刀片的兩側面及底部必須和刀片座槽的兩側面及平面完全帖合無异物，確定無間隙後，鎖緊刀片螺釘。

3.Use compressed air to clean the surface of inserts and insert pocket on insert holder. Ensure they are free of any particles or oil; Position the indexable insert on the insert pocket and tighten the clamping screw securely.

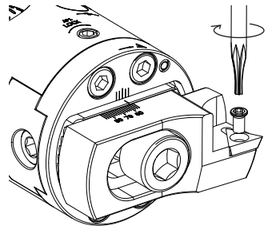

二、産品結構
Manuals

1鏜頭柄部 Connection Portion	4微調鎖緊螺釘 Locking Screw	7刀片座 Insert Holder
2微調刻度盤 Graduated Dial	5 BM中心銷側固螺釘 Locking Screw to the Center Pin BM	8壓緊螺釘 Clamping Screw
3鏜頭主體 Boring Body	6 BM中心銷 Center Pin BM	9注油孔 Grease Hole

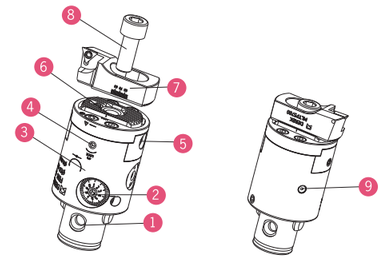

FBH

FBH Micro-Boring Head Manuals
FBH極細微調精鏜刀使用説明書

三、使用步驟
Operating Instructions

步驟一：鬆開刀座壓緊螺釘（逆時針旋轉）圖

步驟二：移動刀片座（圖）位置預調至需加工尺寸（參考刀片座上刻度綫尺寸）

步驟三：擰緊刀座壓緊螺釘（順時針旋轉）圖

步驟四：鬆開刻度盤鎖緊螺釘（逆時針旋轉）圖

步驟五：轉動微調刻度盤（逆時針旋轉）使加工直徑增大，反之减小（每格0.002mm)

步驟六：擰緊刻度盤鎖緊螺釘（順時針旋轉）圖 完成調整

1.Loosen the locking screw in anti-clockwise direction;
2.Move the insert holder close to but smaller than the working diameter;
3.Lock the clamping screw;
4.Loosen the locking screw on graduated dial;
5.Adjust the dial in a clockwise direction until the desired boring diameter is reached.

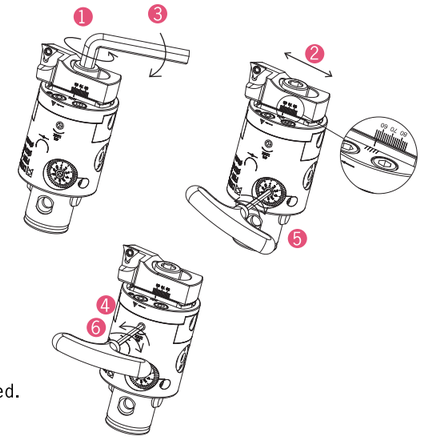

四、使用者注意事項
Notices Of The User

1.在加工尺寸範圍内使用。
1.Use boring heads within suggested range.

2.调整微调刻度盘前必须先松开微调锁紧螺钉，否则内部精调机构将被破坏。
2.Rotate the graduated dial without loosening the locking screw will result in damage to the internal moving parts of the boring head.

3.滑座固定，請使用專用板手調整刀座壓緊螺釘擰緊。扭力要適當，過大會損壞鏜頭精度，過鬆會造成加工時刀座位移。
3.Use genuine key only for unclamping, clamping and any adjustments.

4.本產品爲精密裝置，調整微調刻度盤阻力過大時，請立即停止操作。并確認以下事項：
4.Check the following two possible troubles when the rotation meets big resistance or refuses to move:

- 微調鎖緊螺釘是否鬆開。
  If the locking screw is loosened; or
- 是否超出調整範圍。
  the boring diameter required exceeds the boring range of boring head
- 過度旋轉微調刻度盤，將導致鏜頭損壞。

5.用户須注入潤滑脂（圖），潤滑脂的注入量以從刻度盤周圍滲出爲止，潤滑脂的作用不但起到潤滑的作用，還可以清除滲入的冷却液和雜質；爲了防止長時間不 使用而使潤滑脂硬化，請定期轉動刻度盤。

5.Regularly apply grease into the grease hole installed so that adequate lubrication of moving part is maintained;The boring head shall be set on the smallest diameter when it is greased; Continue the grease injection till it appears to ooze out from behind the graduated dial; Occasionally adjust the boring head through its entire range when storing for a period of time to avoid the grease from hardening.

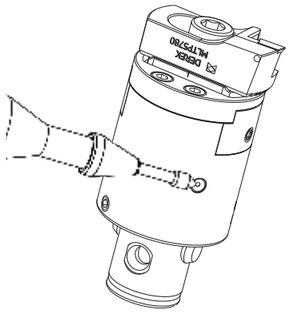

请客户不要自行拆开镗头。
No overhauling boring heads without instructions from DEREK.

CBH

CBH Boring Head Operation Manual
CBH微調精鏜頭使用説明書

一、安裝刀片座、刀片：
Installation Of Insert Holder And Inserts

1、將刀片座和鏜頭安裝部分擦拭幹净。
刀片座底部與鏜頭安裝面帖合，確定無間隙後，擰緊刀片座鎖緊螺釘。
調整刀片座安裝方向，可實現反鏜加工。（圖A）
2、將刀片裝入刀片座内，注意刀片的兩側面及底部必須和刀片座槽的兩側面及平面完全帖合無异物，確定無間隙後，鎖緊刀片螺釘。（圖B）
1. Clean the mounting surface of insert holder and boring body;
Mount the insert holder while fitting into the convex on the body;
Make sure there is no gap and misalignment between insert holder and boring body;Fasten the locking screw properly.
For back boring, please mount the insert holder turned over 180°.
See Fig. A
2. Use compressed air to clean the surface of inserts and insert pocket on insert holder. Ensure they are free of any particles or oil;
Position the indexable insert on the insert pocket and tighten the clamping screw securely.See Fig. B

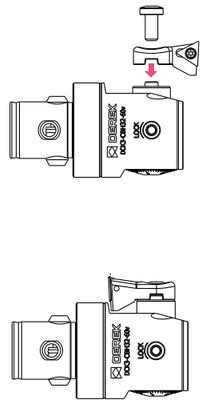

圖A

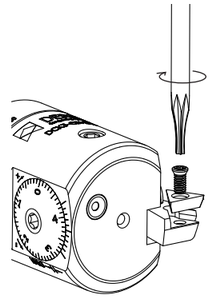

圖B

二、產品結構
Manuals

1鏜頭柄部
Connection Portion
2鏜頭本體
Boring Body
3微調刻度盤
Graduated Dial
4微調鎖緊螺釘
Locking Screw
5注油孔
Grease Hole
6刀片座鎖緊螺絲
Clamping Screw
7刀片座
Insert Holder



刻度盤（1刻度ø0.01mm)

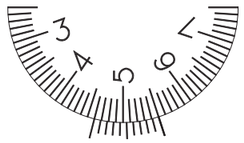

游標的看法：
游標和刻度盤刻綫一致的時候，可按ø0.001mm來看。
How to use the vernier:
Possible to read 0.001 mm/ø from the value at which the vernier and the dial scale are matched.

CBH

CBH Boring Head Operation Manual
CBH微調精鏜頭使用説明書

三、使用步驟
Operating Instructions

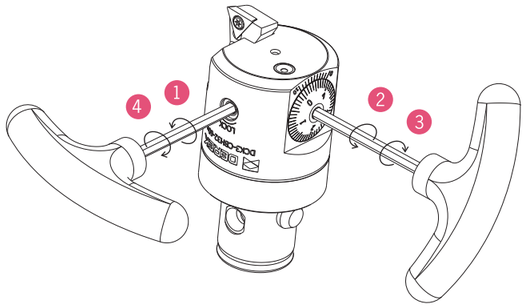

準備工作：須先確認刀片安裝是否匹配，刀片座堅固螺絲是否鎖緊。
步驟一：鬆開微調鎖緊螺釘（逆時針旋轉）（圖）
步驟二：旋轉微調刻度盤（圖）順時針旋轉使加工直徑增大，逆時針旋轉加工直徑縮小。（刻度盤每格爲直徑0.01mm）
步驟三：調整尺寸加工時，請按同方向旋轉結束。
步驟四：以適當力度擰緊微調鎖緊螺釘（順時針旋轉）圖 完成調整

Before operation, ensure the indexable insert is ok for working and the locking screw is fastened securely.
1.Loosen the locking screw in anti-clockwise direction;
2.Adjust the graduated dial in a counterclockwise direction passed the desired size required and rotate the dial in a clockwise direction until the desired boring diameter is reached.
3.Finish the adjustment on graduated dial in the same direction as the beginning of rotating.
4.Tighten the locking screw properly.

四、使用者注意事項
Notices Of The User

1請在調整範圍內加工使用。
Use boring heads within suggested range;

2调整微调刻度盘前，必须松开微调锁紧螺钉。否则会对内部精调机构造成损坏。
Rotate the graduated dial without loosening the locking screw will result in damage to the internal moving parts of the boring head.

3本產品是由調整微調刻度盤帶動精密螺杆旋轉，來實現刀片座移動。在阻力過大或無法轉動時，請立即停止調整。并確認以下事項：
Check the following two possible troubles when the rotation meets big resistance or refuses to move:

側面鎖緊螺絲是否鬆開
If the locking screw is loosened; or

是否超出調整範圍
the boring diameter required exceeds the boring range of boring head

4使用反鏜功能時，主軸必須反轉！
Machine spindle shall be run in a anticlockwise direction when back boring is adopted.

5用户須注入潤滑脂（圖）潤滑脂的注入量以從刻度盤周圍滲出爲止，潤滑脂的作用不但起到潤滑的作用，還可以清除滲入的冷却液和雜質；爲了防止長時間不 使用而使潤滑脂硬化，請定期轉動刻度盤。
Regularly apply grease into the grease hole installed so that adequate lubrication of moving part is maintained;The boring head shall be set on the smallest diameter when it is greased; Continue the grease injection till it appears to ooze out from behind the graduated dial;Occasionally adjust the boring head through its entire range when storing for a period of time to avoid the grease from hardening.

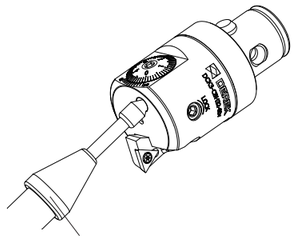

潤滑脂槍
Grease Gun

请客户不要自行拆开镗头。
No overhauling boring heads without instructions from DEREK.

DBJ10/12/16

DBJ10/12/16 Micro-Boring Head Manuals
DBJ10/12/16微調精密鏜頭使用説明書

一、使用步驟
Operating Instructions

步驟一：選擇加工範圍內刀杆，置于鏜頭安裝孔內，使刀杆削平面對準固定螺絲緊固方向，并確認刀尖處于鏜頭微調正方向。擰緊刀杆鎖緊螺釘（圖）
步驟二：鬆開微調鎖緊螺釘（圖） 逆時針旋轉
步驟三：調整微調旋鈕（圖）順時針使加工尺寸增大，反之減小。調整尺寸時，請按同方向微調，以確保微調精度。精度爲每小格0.01mm
步驟四：微調至所需尺寸後，以適當扭力鎖緊微調鎖緊螺釘（圖） 順時針旋轉

Step 1: Hold right boring bar in right hole. Make sure weldon part of boring bar is to the position of lock screw and cutting edge of boring bar is to the the position of adjusting panel. Fasten the locking screw properly.
Step 2: Loosen adjusting screw (see figure 4) anti-clockwise.
Step 3: Enlarge the boring diameter by adjusting on the adjusting panel (see figure 2) anti-clockwise, while adjusting clockwise is to reduce the boring range.
Step 4: Adjust till the boring diameter required and lock the adjusting screw properly.

操作示意圖Instruction

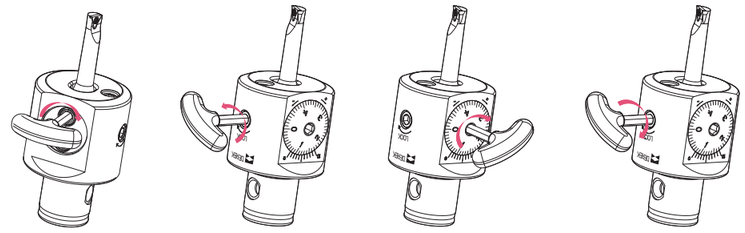

步驟一 Step 1　步驟二 Step 2　步驟三 Step 3　步驟四 Step 4

二、產品結構
Manuals

1鏜頭柄部 Connection part
2鏜頭本體 Tool body
3微調旋鈕 Adjusting knob
4微調鎖緊螺釘 Locking screw
5鏜刀杆鎖緊螺釘 Mounting screw
6鏜刀杆 Boring bar

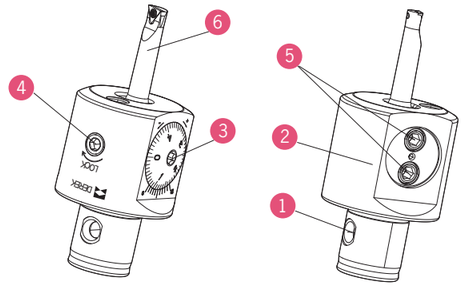

三、使用者注意事項
Notices Of The User

1.請在加工範圍內使用。
2.調整微調旋鈕前必須鬆開微調鎖緊螺釘，否則會導致微調機構損壞。
3.請使用專用扳手固定微調鎖緊螺釘，扭力要適當，過緊會導致芯軸移位，過鬆會造成精度不良。
4.本產品爲精密機構，當阻力過大微調刻度盤無法轉動時，請立即停止調整，并確認以下事項
A.微調鎖緊螺釘是否鬆開；
B.是否超出調整範圍；
C.當過度旋轉調整刻度盤會微調導致精密機構損壞。

1.Please use this tool within work range.
2.Please loosen the adjusting screw before adjusting.
3.Please fasten the adjusting knob by means of special wrench properly.
4.Please stop the adjustment when it is faced with a strong resistance, or it is not able to go on. And make sure:
A. If the locking screws is unlocked;
B. If the adjustment is within the suggested work range;
C.Over adjustment will bring damage to the tool irreversibly.

NBH2084

NBH2084 Micro-Boring Head Manuals
NBH2084微調精密鏜頭使用説明書

一、使用步驟
Operating Instructions

步驟一：選擇加工範圍内刀杆（圖），置于鏜頭安裝孔内（A圖 B圖 C圖），使刀杆削平面對準固定螺絲緊固方向，并確認刀尖處于鏜頭微調正方向
步驟二：鬆開微調鎖緊螺釘（圖） 逆時針旋轉
步驟三：調整微調旋鈕（圖）逆時針使加工尺寸增大，反之减小。調整尺寸時，請按同方向微調，以確保微調精度。精度爲每小格0.01mm
步驟四：微調至所需尺寸後，以適當扭力鎖緊微調鎖緊螺釘（圖）順時針旋轉

Step 1: Hold right boring bar (see figure 6) in right hole (see pic A, B, C). Make sure weldon part of boring bar is to the position of lock screw and cutting edge of boring bar is to the the position of adjusting panel.
Step 2: Loosen adjusting screw anti-clockwise.
Step 3: Enlarge the boring diameter by adjusting on the adjusting panel (see figure 2) anti-clockwise, while adjusting clockwise is to reduce the boring range.
Step 4: Adjust till the boring diameter required and lock the adjusting screw properly.

操作示意圖Instruction

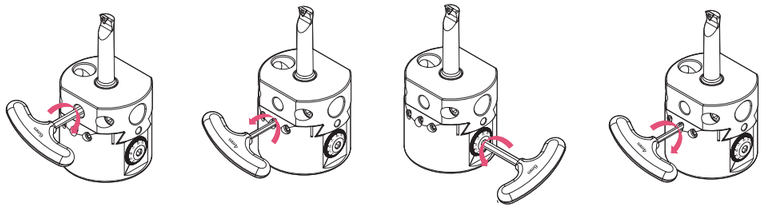

步驟一 Step 1　步驟二 Step 2　步驟三 Step 3　步驟四 Step 4

二、產品結構
Manuals

1鏜頭本體 Tool body
2微調旋鈕 Adjusting panel
3微調鎖緊螺釘 Adjusting screw
4鏜刀杆鎖緊螺釘 Locking screw
5移動滑塊 Movable part
6鏜刀杆 Boring bar

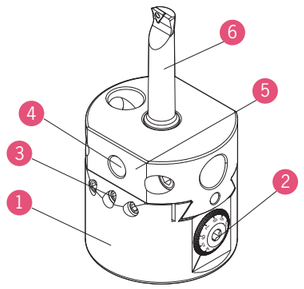

三、使用者注意事項
Notices Of The User

1.請在加工範圍内(Φ8–280mm)使用。
2.調整微調旋鈕前必須鬆開，微調鎖緊螺釘，否則會導致微調機構損壞。
3.請使用專用扳手固定微調鎖緊螺釘，扭力要適當，過緊會導致芯軸移位，過鬆會造成精度不良。
4.本產品爲精密機構，當阻力過大微調刻度盤無法轉動時，請立即停止調整，并確認以下事項
A.微調鎖緊螺釘是否鬆開
B.是否超出調整範圍
C.當過度旋轉微調刻度盤會導致精密機構損壞。

1.Please use it within work range (Φ8 - 280 mm).
2.Please loosen the adjusting screw before adjusting.
3.Please use special wrench to lock the adjusting screw properly.
4.Please stop the adjustment when it is faced with a strong resistance, And make sure:
A.If the locking screws is unlocked;
B.If the adjustment is within the suggested work range;
C.Over adjustment will bring damage to the tool irreversibly.

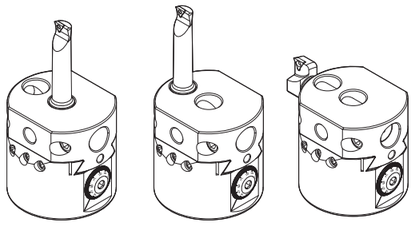

A　B　C

ABH/DBH

ABH/DBH Twin Cutter Rough Boring Head Manuals
ABH/DBH雙刃粗鏜頭使用説明書

一、使用步驟
Operating Instructions

ABH/DBH粗鏜頭爲雙刃鏜頭可先調整一側。
步驟一：鬆開刀片座鎖緊螺釘（圖）逆時針旋轉
步驟二：旋轉刀片座調整螺釘（圖），推動刀片座（圖）到預定尺寸可參照刻度綫
步驟三：適當扭力擰緊刀片座鎖緊螺釘（圖）順時針旋轉調整另一側同上

Adjustment starts one of twin insert holders on ABH/DBH boring head.
Step 1: Unlock adjusting screw anti-clockwise. (see figure 5)
Step 2: Loosen clamping screw (See figure 3). Move insert holder to the required position according to the reference line marked on the tool body. (see figure 4)
Step 3: Fasten clamping screw properly .(see figure 5)
Follow the same steps aforementioned to adjust the other insert holder.

操作示意圖Instruction

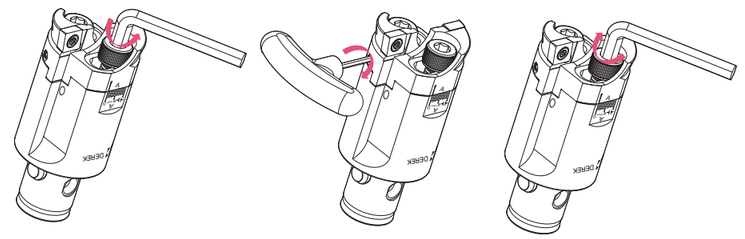

步驟一 Step 1　步驟二 Step 2　步驟三 Step 3

二、產品結構
Manuals

1鏜頭柄部 Connection part
2鏜頭本體 Tool body
3刀片座調整螺釘 Adjusting screw
4刀片座 Insert holder
5刀片座鎖緊螺釘 Clamping screw

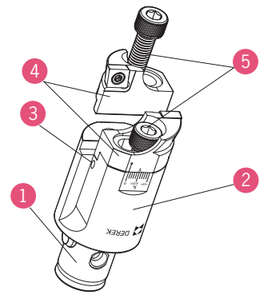

三、加工方法
Boring Options

ABH/DBH粗鏜頭有兩種加工方式
1.等刃式切削加工，A刀片座裝于A面，B刀片座裝于B面。適用于小餘量加工切削平穩。（圖A）
2.錯齒式切削加工，A刀片座裝于B面，B刀片座裝于A面。形成高低刃，適用于大餘量加工。（圖B）

Two boring options available with ABH/DBH rough boring head.
1. Balanced cutting: Insert holder A on side A, while insert holder B on side B. For stable cutting with a small stock allowance. (See figure A)
2. Stepped cutting: Insert holder A on side B and insert holder B on side A. For cutting with a big stock allowance. (See figure B)

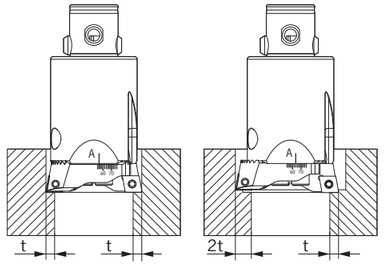

圖A　圖B

四、使用者注意事項
Notices Of The User

采用錯齒式切削，切削量調整時須高刃與低刃相同。以平衡兩邊所受切削力，防止共振發生，避免單刃受力過大受損。
Make sure the cutting data for the two insert holders are same when stepped cutting is adopted.



DHP

DHP Hydraulic Chuck
DHP液壓刀柄

7:24錐度，均達到AT3級標準。
7:24; ≤ AT3.

–195℃深冷處理，降低變形，保持精度，
提高產品穩定性。
Cryogenic treatment (-195℃): minimise the deformation of tool holder:
Atain high accuracy and stability.



厚實的刀體能起到更好的減震功能，提升表面粗糙度。
Hydraulic system absorbs shaking of tool;
Increase surface-finish quality significantly.

刀具偏擺3D≤ 0.003mm，減少刀具損耗，
降低刀具費用,大幅度提升表面粗糙度，
重復精度佳，節省校刀時間。
Runout ≤3 μm; increase tool life; reduce tool cost;
Increase surface-finish quality significantly;
High repeat accuracy.

夾持操作簡易，約10秒內完成，
夾刀可達到0.003mm徑向精度，
僅需一衹T型扳手即可完成裝刀，
不需要昂貴復雜的周邊設備。
User-friendly - get the accuracy of 3μm within 10sec;
Assmble tool with one allen key only;
Expensive ancillary equipment is not needed.

360° 且兩點夾持, 夾持穩定可靠。
360° & 2 positions clamping; high rigidity.

使用者注意事項
Notices Of The User

■夾持柄徑：被夾持刀具柄徑公差不低于h6級，若低于此標準可能導致夾緊無力而掉刀。
■夾持深度：被夾持的刀具插入夾持孔深度，必須大于安全深度“H”。
■清潔：液壓刀柄使用前需將刀柄內腔表面清洗幹净，不得有殘餘的防銹油或其他雜質附着于內孔表面。

■Tool shank tolerance: ≥ h6;
■Clamp depth: > H;
■Clean the chuck before and after use.

液壓刀柄夾持扭力測驗
Clamping Torque Test

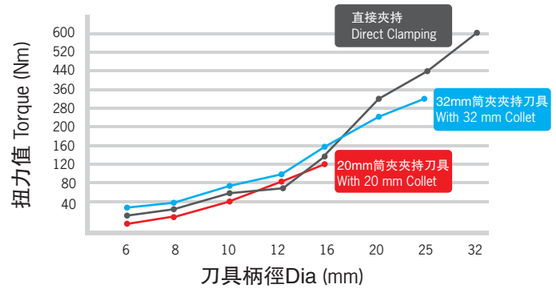

SF/DSF

SF/DSF Shrink-Fit Holder
SF/DSF熱縮刀柄

7:24錐度，均達到AT3級標準。
7:24; ≤ AT3.

使用刀柄內部的拉緊螺釘實現後拉式鎖緊，定位精度高。
Locked with internal pull stud, Precise positioning.

通過更換延長杆可實現柄徑爲D3-D12mm的刀具夾持，
減少成本，簡單實現前期準備工作，提高效率。
A wide clamping range (D3-D12mm) is available with different exenders, which reduces production costs and increases efficiency.

采用優質熱縮特殊鋼材熱膨脹率大，夾持可靠。
With superior-quality steel with a good CTE.
(CTE:The coefficient of thermal expansion)



3°角設計，外形細長，
加工幹涉小。
3° Taper-off design minimizes interference.

電磁誘導加熱器
Heat Machine

型號 Specification	加熱時間 Shrink time	冷却方式 Cooling	輸出電源 Voltage	瞬間輸出最大功率 Power	適用刀具材質 Tools	範圍 Range	LxWxH (mm)	重量 Weight
SF-300	20-24″	風冷 Air Cooling	SINGLE-PHASE 220V 50/60HZ 15AMP	2000~3000W	鎢鋼 Carbide	Φ3 - 20 mm 標配 Φ18 - 32 mm 選配	300x300x685	20KG



HPC

HPC High-speed Power Chuck
HPC高速强力刀柄

–195℃深冷處理，降低變形，保持精度，
提高產品穩定性。
Cryogenic treatment (-195℃): minimise the deformation of tool holder:
Atain high accuracy and stability.

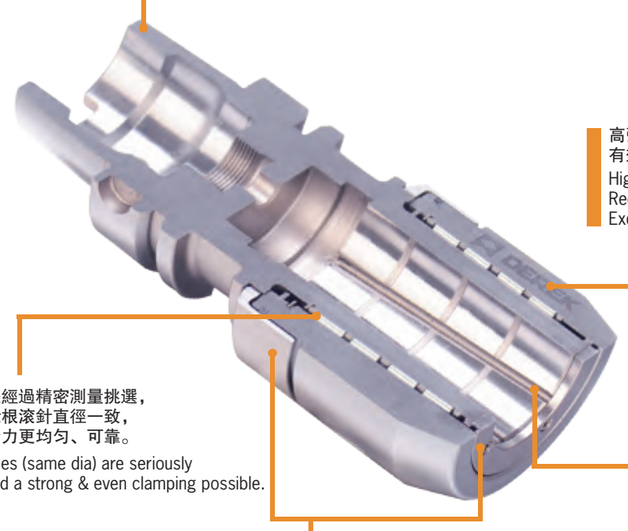

高强度螺帽
有效防止振刀，適合重力切削
High strength nuts;
Reduce the shaking of cutting tool;
Excellent for heavy duty.

超硬滾針每一根都是經過精密測量挑選，
使同一刀柄內的百餘根滾針直徑一致，
超高的硬度傳遞鎖緊力更均匀、可靠。
Hardened roller needles (same dia) are seriously selected and arranged a strong & even clamping possible.

前後雙重防護罩，
防止液體，灰塵，切屑進入本體，
與轉螺帽形成的間隙間損壞表面及滾針。
Dust-proof ring and cover,
Prevent the body from liquid and dust.

內腔的防滑槽設計，使裝刀過程中的油污、
异物可擠入槽內，使夾持面貼合更緊密，
有效防止刀具滑落，同時可釋放夾持過程
中產生的內應力。
Special design of cavity & groove make the clamping firm, keep internal structure clean, and redeuce the internal stress significantly.

使用者注意事項
Notices Of The User

■請選用直徑公差等級高于h7級的刀具，
■當選用柄部直徑偏小的刀具時會導致夾不緊而產生溜刀現象。
■禁止無刀狀態下進行空夾。
■Shank tolerance: > h7;
■Suitable shank diameter is required;
■Free clamping is not allowed.



GSK

GSK High Precision Collet Chuck
GSK高速精密筒夾刀柄

7:24錐度，均達到AT3級標準。
7:24; ≤ AT3.

刀柄整體動平衡G2.5; 25,000 rpm
最高轉速可達45,000 rpm
Balanecd: G2.5; 25,000 rpm
Max: 45,000 rpm



超高速螺帽，光面無槽設計，使其零風阻，
高强度，高速運轉下，静音可靠。
Notch-free design: Prevent vibration;
Reduce noise splattering coolant;
Assure increased strength of nut itself.

–195℃深冷處理，降低變形，保持精度，
提高產品穩定性。
Cryogenic treatment (-195 ℃): minimise the deformation of tool holder:
Atain high accuracy and stability.

可選配獨有的密封蓋，中心出水或端面出水，
并帶有雙重O型密封圈。使其獲得最佳的出水效果。
Two kind of O-type seal rings available:Interal-cooling & flange cooling.

刀具偏擺3D≤ 0.005 mm，減少刀具損耗，
降低刀具費用,大幅度提升表面粗糙度，
重復精度佳，節省校刀時間。
Runout(3D) ≤5 μm; increase tool life; reduce tool cost;
Increase surface-finish quality significantly;
High repeat accuracy.

出水狀態
Cooling

端面出水
Flange Cooling



中心出水
Internal Cooling



DSK 精密彈性筒夾
DSK Precision Collet



相比普通ER刀柄具有較小的錐角，較長的夾持部位，
更能提供超强的夾持力和定心性。
Compared with ER collet, a smaller taper angle, a longer clamping length, a higher clamping strength and concentricity

TPG

Assembling of Tapping Chuck TPG
TPG攻絲刀柄及TPE攻絲筒夾



可靠的同心度
Best Conentricity

絲錐快速更換
Quick Change

可選筒夾長度
Longer Tapping Collet

中心冷卻出水
Internal Cooling

特 點 / Feature

■適用于高精度同步數控加工。
■由主軸中心提供内冷却。
■爲達到高速攻絲的剛性設計。
■短型且緊凑的設計。
■未裝裱扭矩限制器以避免螺紋深度不足。
■冷却液壓高達5MPa。

■High precision synchro tapping;
■Internal cooling supply;
■High speed rigid tapping;
■Short and compact design;
■Torque force is fixed;
■Cooling pressure up to 5MPa.

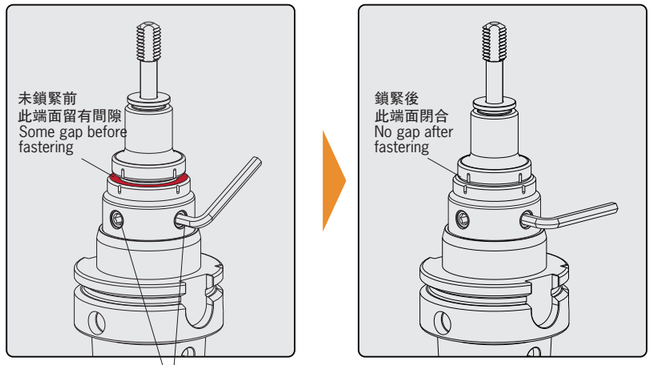

兩顆螺釘成90度安裝，擰緊扳手的同時筒夾端面與刀柄本體緊密貼合，獲得極佳的連接剛性。
Two locking screws are designed in 90° degree.

VER

VER Synchronized Tapping Chuck
VER快換式微補償攻牙刀柄



微補償 Synchro
快換式 Quick Change
中心冷卻 Internal Cooling
延長絲錐夾頭 Deeper Tapping

特 點 / Feature

■主軸的旋轉與實際絲錐進給之間有微小的同步誤差是難以避免的。使用剛性攻絲刀柄意味着任何一點微小的偏差都會大大增加絲錐所受到的力，使得絲錐壽命大大縮短。采用帶有微量補償(例如+0.2mm，–1mm)能有效地充分緩衝絲錐在正轉及反轉時受到的壓力，使絲錐的微量損傷減少到最低，從而有效延長絲錐壽命100% 以上，使螺紋精度更高。這對于脆性相對較大的硬質合金絲錐意義更大。
■獨特的快換設計，使得換刀變得非常簡單，無需從刀盤上取出整個刀柄，祇需1秒便可將快換絲錐夾頭取出，然後換上備用絲錐夾頭，或更換絲錐即可，從而減少對刀時間，有效節省換刀時間，增加加工時間。
■刀柄中心通冷却液，可以對刀具充分潤滑及排屑，最大壓力可達50bar。
■可配延長絲錐夾頭，滿足不同加工深度的要求。(填補了世面上普通微補償ER刀柄長度單一的問題）。
■攻絲能力
M3-M12 M6-M20 M14-M33.
■可匹配機床主軸
BT SK HSK

■On rigid tapping, this tapping chuck provides a minimum compensation to absorb eventual errors between feed rate and pitch of the thread. If the alignment is not perfect, then the tap wears out easily, because the tap touches the flanks fo the hole because of a slight radial play. With this tapping chuck, the radial play is eliminated, which will increase the tool life of taps drastically.
■Special design for the quick change of the tap and the tapping chuck;
■Possible coolant flow up to 50 bar.
■Longer-size tapping collets applicable to different tapping depths;
■Tapping capacity: M3 – M12; M6 – M20; M14 – M33.
■With spindle standards: BT (JIS B6339); SK (DIN69871); HSK (DIN69893).

VER
VER Synchronized Tapping Chuck
VER快換式微補償攻牙刀柄

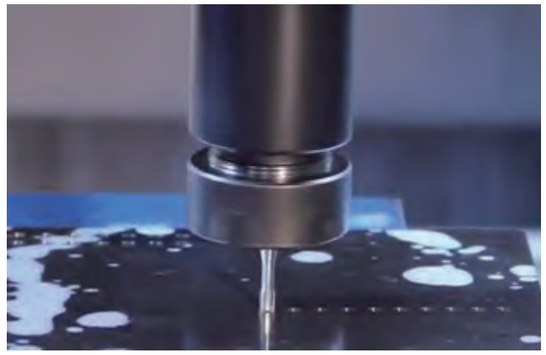

普通ER刀柄剛性攻螺紋

轉速/n:350rew/min
進給/F:317.5mm/min

特 點 / Feature

效率較低。



Other ER Tapping Chuck
普通ER刀柄攻螺紋加工效果

特 點 / Feature

螺牙隆起不足表面不整齊，
影響螺紋連接强度。
Poor threading surface and strength.

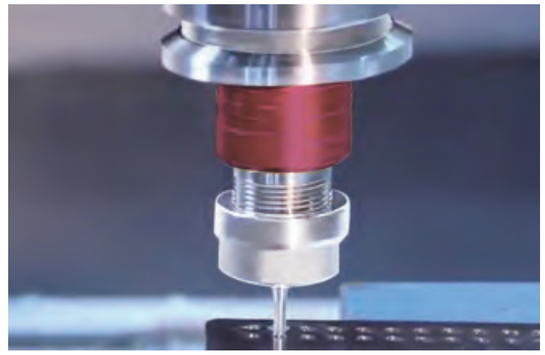

德克微補償刀柄攻螺紋

轉速/n:750rew/min
進給F:680.375mm/min

特 點 / Feature

效率提高2–4倍。



DEREK VER Tapping Chuck
德克VER微補償刀柄攻螺紋加工效果

特 點 / Feature

螺牙牙型整齊完整，
表面質量平整光滑，
連接强度高。
Full thread profile, smooth surface
and high strength.

DHP

HSK-A-DHP Hydraulic Chuck
HSK-A-DHP 液壓刀柄

NEW



MAX 30,000 min⁻¹

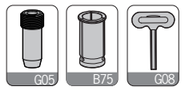

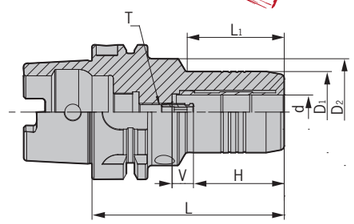

型號 Specification		d	D1	D2	H	V	L1	L	T	適用筒夾 Suit collet	扳手 Wrench	重量 Weight
HSK40A-	DHP6-70	6	28	34	27.5	10	28	70	M5X0.8	-	T04	0.55
	DHP8-70	8	30	34	27.5	10	28	70	M6X1.0	-	T04	0.56
	DHP10-75	10	32	34	32.5	10	34	75	M6X1.0	-	T04	0.61
	DHP12-85	12	34	34	37.5	10	-	85	M6X1.0	D12/OD12	T04	0.68
HSK50A-	DHP6-70	6	28	40	27.5	10	28	70	M5X0.8	-	T04	0.74
	DHP8-70	8	30	40	27.5	10	28	70	M5X0.8	-	T04	0.75
	DHP10-75	10	32	40	32.5	10	34	75	M5X0.8	-	T04	0.82
	DHP12-85	12	34	40	37.5	10	44	85	M8X1.0	D12/OD12	T04	0.87
	DHP14-85	14	36	40	37.5	10	44	85	M8X1.0	-	T04	0.90
	DHP16-90	16	38	60	42.5	10	30	90	M8X1.0	-	T04	0.94
	DHP18-90	18	41	-	42.5	10	-	90	M8X1.0	-	T04	0.96
	DHP20-90	20	42	-	42.5	10	-	90	M8X1.0	D20/OD20	T04	0.99
HSK63A-	DHP6-70	6	28	50	27.5	10	24	70	M5X0.8	–	T04	1.01
	DHP8-70	8	30	50	27.5	10	24	70	M6X1.0	-	T04	1.02
	DHP10-75	10	32	50	32.5	10	35	75	M8X1.0	-	T04	1.08
	DHP12-85	12	34	50	37.5	10	40	85	M8X1.0	D12/OD12	T04	1.13
	DHP14-85	14	36	50	37.5	10	40	85	M8X1.0	-	T04	1.17
	DHP16-90	16	38	50	42.5	10	46	90	M8X1.0	-	T04	1.21
	DHP18-90	18	41	50	42.5	10	47	90	M8X1.0	-	T04	1.22
	DHP20-90	20	43	50	42.5	10	48	90	M8X1.0	D20/OD20	T04	1.25
	DHP25-120	25	57	63	51	10	59	120	M16X1.0	-	T05	2.17
	DHP32-125	32	63	75	55	10	63	125	M16X1.0	D32/OD32	T05	2.54
HSK100A-	DHP6-75	6	28	54	27.5	10	26	75	M5X0.8	-	T04	2.40
	DHP8-75	8	30	54	27.5	10	26	75	M6X1.0	-	T04	2.41
	DHP10-90	10	32	50	32.5	10	42	90	M8X1.0	-	T04	2.48
	DHP12-95	12	34	50	37.5	10	47	95	M8X1.0	D12/OD12	T04	2.53
	DHP14-95	14	36	50	37.5	10	47	95	M8X1.0	-	T04	2.58
	DHP16-100	16	38	50	42.5	10	53	100	M8X1.0	-	T04	2.61
	DHP18-100	18	41	50	42.5	10	53	100	M8X1.0	-	T04	2.66
	DHP20-105	20	43	50	42.5	10	59	105	M8X1.0	D20/OD20	T04	2.75
	DHP25-120	25	57	63	51	10	62	120	M8X1.0	-	T05	3.39
	DHP32-125	32	63	75	55	10	62	125	M8X1.0	D32/OD32	T05	3.66

注：報價時含扳手，筒夾需單獨訂購。
Notice:Wrench is included,while collet shall be ordered separately.

特點 / Feature

■DHP刀具系列用途高轉速、高精密切削加工，切削效果佳。
■動平衡設定: G2.5；20,000 rpm。
■3D處徑向跳動0.003 mm。

■For high-speed and high precision cutting;
■Balanced: G2.5; 20,000 rpm;
■Runout (X3D): < 0.003 mm.

DHP

HSK-A-DHP Hydraulic Chuck
HSK-A-DHP 液壓刀柄（加長款）

NEW

型號 Specification		d	D1	D2	H	V	L1	L	T	適用筒夾 Suit collet	扳手 Wrench	重量 Weight
HSK63A-	DHP6-150	6	28	50	27.5	10	103	150	M5X0.8	-	T04	1.3
	DHP6-200	6	28	50	27.5	10	103	200	M5X0.8	-	T04	1.65
	DHP8-150	8	30	50	27.5	10	104	150	M6X1.0	-	T04	1.44
	DHP8-200	8	30	50	27.5	10	104	200	M6X1.0	-	T04	1.74
	DHP10-150	10	32	50	32.5	10	104	150	M6X1.0	-	T04	1.51
	DHP10-200	10	32	50	32.5	10	104	200	M6X1.0	-	T04	1.9
	DHP12-150	12	34	50	37.5	10	105	150	M6X1.0	D12/OD12	T04	1.58
	DHP12-200	12	34	50	37.5	10	105	200	M6X1.0	D12/OD12	T04	1.92
	DHP14-150	14	36	50	37.5	10	105	150	M6X1.0	-	T04	2.11
	DHP14-200	14	36	50	37.5	10	105	200	M6X1.0	-	T04	2.52
	DHP16-150	16	38	50	42.5	10	106	150	M8X1.0	-	T04	1.71
	DHP16-200	16	38	50	42.5	10	106	200	M8X1.0	-	T04	2.46
	DHP18-150	18	41	50	42.5	10	107	150	M8X1.0	-	T04	1.83
	DHP18-200	18	41	50	42.5	10	107	200	M8X1.0	-	T04	2.55
	DHP20-150	20	43	50	42.5	10	108	150	M8X1.0	D20/OD20	T04	1.91
	DHP20-200	20	43	50	42.5	10	108	200	M8X1.0	D20/OD20	T04	2.67

HSK-A-DHP Super Slim Hydraulic Chuck
HSK-A-DHP 超細長液壓刀柄

NEW

MAX 30,000 min⁻¹



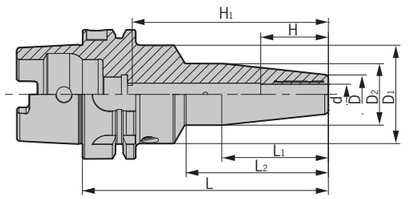

型號 Specification		d	D	D1	D2	L1	L2	L	H	H1	T	適用筒夾 Suit collet	扳手 Wrench	重量 Weight
HSK63A-	DHP6S-120	6	14	48	26	57	70	120	25	98	M5X0.8	-	T04	1.10
	DHP6S-150	6	14	48	26	57	85	150	25	128	M5X0.8	-	T04	1.30
	DHP8S-120	8	17	48	28	52	70	120	31	95	M6X1	-	T04	1.20
	DHP8S-150	8	17	48	28	52	85	150	31	125	M6X1	-	T04	1.30
	DHP10S-120	10	19	48	30	52	70	120	33	94	M6X1	-	T04	1.20
	DHP10S-150	10	19	48	30	52	87	150	33	124	M6X1	-	T04	1.40
	DHP12S-120	12	21	48	32	52	70	120	36	93	M6X1	D12/OD12	T04	1.20
	DHP12S-150	12	21	48	32	52	87	150	36	123	M6X1	D12/OD12	T04	1.40

注：報價時含扳手，筒夾需單獨訂購。
Notice:Wrench is included,while collet shall be ordered separately.

特點 / Feature

■DHP刀具系列用途高轉速、高精密切削加工，切削效果佳。
■動平衡設定: G2.5; 20,000 rpm。
■3D處徑向跳動0.003 mm。
■外觀細長設計，加工不易幹涉。

■For high-speed and high precision cutting;
■Balanced: G2.5; 20,000 rpm;
■Runout (X3D): < 0.003 mm;
■No interference due to slim design.

SF

HSK-A-SF Shrink Fit Holder
HSK-A-SF燒結式熱裝刀柄（一體式）



MAX 50,000 min⁻¹



NEW

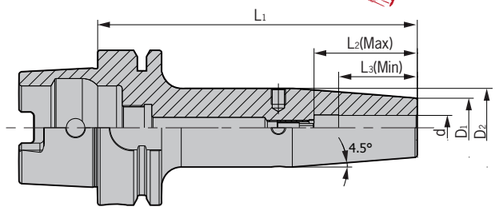

型號 Specification		d	D1	D2	L1	L2 (Max)	L3 (Min)	重量 Weight
HSK63A-	SF3-80	3	10	10	80	-	9	0.50
	SF4-80	4	10	10	80	-	12	0.60
	SF5-80	5	10	10	80	-	15	0.70
	SF6-80	6	21	27	80	28	18	0.80
	SF6-130	6	21	27	130	28	18	1.00
	SF6-160	6	21	27	160	28	18	1.20
	SF8-80	8	21	27	80	34	24	0.80
	SF8-130	8	21	27	130	34	24	1.02
	SF8-160	8	21	27	160	34	24	1.25
	SF10-85	10	24	32	85	40	30	0.90
	SF10-130	10	24	32	130	40	30	1.17
	SF10-160	10	24	32	160	40	30	1.45
	SF12-90	12	24	32	90	40	30	0.92
	SF12-130	12	24	32	130	40	30	1.15
	SF12-160	12	24	32	160	40	30	1.55
	SF14-90	14	27	34	90	42	32	0.95
	SF14-130	14	27	34	130	42	32	1.18
	SF14-160	14	27	34	160	42	32	1.60
	SF16-95	16	27	34	95	42	32	1.00
	SF16-130	16	27	34	130	42	32	1.21
	SF16-160	16	27	34	160	42	32	1.65
	SF18-95	18	33	42	95	50	40	1.05
	SF18-130	18	33	42	130	50	40	1.25
	SF18-160	18	33	42	160	50	40	1.70
	SF20-100	20	33	42	100	50	40	1.20
	SF20-130	20	33	42	130	50	40	1.49
	SF20-160	20	33	42	160	50	40	1.80
	SF25-115	25	44	53	115	55	45	1.98
	SF25-160	25	44	53	160	55	45	2.10
	SF32-120	32	44	53	120	60	50	2.10
	SF32-160	32	44	53	160	60	50	2.60

轉下頁
See next page

SF
HSK-A-SF Shrink Fit Holder
HSK-A-SF燒結式熱裝刀柄（一體式）

型號 Specification		d	D1	D2	L1	L2 (Max)	L3 (Min)	重量 Weight
HSK100A-	SF6-85	6	21	27	85	28	18	2.00
	SF6-130	6	21	27	130	28	18	2.30
	SF6-160	6	21	27	160	28	18	2.62
	SF8-85	8	21	27	85	34	24	2.00
	SF8-130	8	21	27	130	34	24	2.30
	SF8-160	8	21	27	160	34	24	2.65
	SF10-90	10	24	32	90	40	30	2.20
	SF10-130	10	24	32	130	40	30	2.40
	SF10-160	10	24	32	160	40	30	2.70
	SF12-95	12	24	32	95	40	30	2.30
	SF12-130	12	24	32	130	40	30	2.50
	SF12-160	12	24	32	160	40	30	2.75
	SF14-95	14	27	34	95	42	32	2.35
	SF14-130	14	27	34	130	42	32	2.60
	SF14-160	14	27	34	160	42	32	2.85
	SF16-100	16	27	34	100	42	32	2.50
	SF16-130	16	27	34	130	42	32	2.80
	SF16-160	16	27	34	160	42	32	3.13
	SF18-100	18	33	42	100	50	40	2.55
	SF18-130	18	33	42	130	50	40	2.85
	SF18-160	18	33	42	160	50	40	3.21
	SF20-105	20	33	42	105	50	40	2.60
	SF20-130	20	33	42	130	50	40	2.90
	SF20-160	20	33	42	160	50	40	3.25
	SF25-115	25	44	53	115	55	45	2.80
	SF25-160	25	44	53	160	55	45	3.40
	SF32-120	32	44	53	120	60	50	3.20
	SF32-160	32	44	53	160	60	50	3.60

特 點 / Feature

■動平衡設定: G2.5; 25,000 rpm。
■3D處徑向跳動0.003 mm。

■Balanced: G2.5; 25,000 rpm;
■Runout (X3D): < 0.003 mm.

DSF/DC

HSK-A-DSF Shrink Fit Holder
HSK-A-DSF燒結式熱裝刀柄（分體式）



MAX 50,000 min⁻¹

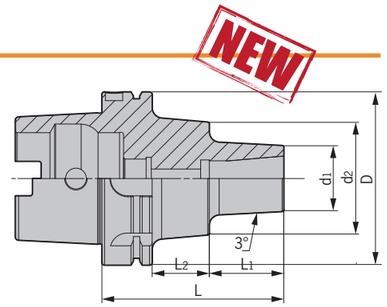

型號 Specification		D	d1	d2	L1	L2	L	L型扳手 Wrench	重量 Weight
HSK50A-	DSF12-100	50	38	-	74	-	100	L06	0.80
HSK63A-	DSF12-100	63	38	-	74	-	100	L06	1.00
	DSF12-135	63	38	-	109	-	135	L06	1.70
HSK100A-	DSF12-105	100	38	65	43	33	105	L06	3.40

注：報價時含扳手。
Notice:Wrench is included.

特點 / Feature

■動平衡設定: G2.5; 25,000 rpm。
■3D處徑向跳動0.003 mm。
■Balanced: G2.5; 25,000 rpm;
■Runout (X3D): < 0.003 mm.

HSK-A-DC Precision Slim Collet Chuck
HSK-A-DC小徑精密夾頭本體



MAX 50,000 min⁻¹



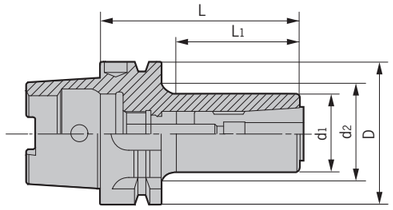

型號 Specification		D	d1	d2	L1	L	適用筒夾 Suit collet	拉緊螺釘 Tension screw	止動螺母 Stop screw	T型扳手 Wrench	重量 Weight
HSK50A-	DC6-75	50	14	22.5	34	75	DC6	E050U250	ZD6-4	T04	0.67
	DC6-100	50	14	29	48	100	DC6	E050U500	ZD6-4	T04	0.70
HSK63A-	DC6-75	63	14	22.5	34	75	DC6	E050U200	ZD6-5	T04	0.80
	DC6-95	63	14	29	45	95	DC6	E050U400	ZD6-5	T04	0.90
	DC6-120	63	14	37	53	120	DC6	E050U650	ZD6-5	T04	1.10
	DC6-150	63	14	40	80	150	DC6	E050U950	ZD6-5	T04	1.20
	DC8-100	63	22	37	48	100	DC8	E060U400	ZD8-2	T05	1.10
	DC10-110	63	28	45	55	110	DC10	E080U300	ZD10-2	T06	1.20
	DC12-120	63	34	51.5	65	120	DC12	E100U350	ZD12-1	T08	1.30

注：報價時含扳手，筒夾需單獨訂購。
Notice:Wrench is included,while collet shall be ordered separately.

特點 / Feature

■動平衡設定: G2.5；30,000 rpm。
■3D處徑向跳動0.003 mm。
■Balanced: G2.5; 30,000 rpm;
■Runout (X3D): < 0.003 mm.

GSK

HSK-A-GSK High-speed Collet Chuck
HSK-A-GSK高速精密筒夾本體



MAX 45,000 min⁻¹

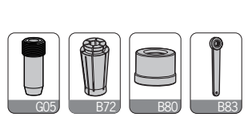

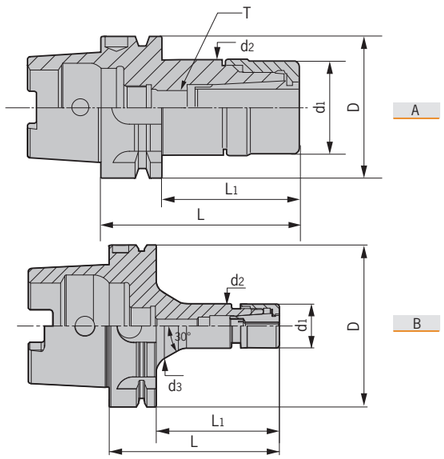

型號 Specification		圖示 Figure	D	d1	d2	d3	a	L	L1	T	適用筒夾 Suit collet	重量 Weight
HSK40A-	GSK6-60	A	40	19.5	20	-	-	60	40	-	DSK6	0.47
	GSK10-75	A	40	27	27.5	-	-	75	55	-	DSK10	0.50
HSK50A-	GSK6-60	A	50	19.5	20	-	-	60	34	-	DSK6	0.60
	GSK6-80P	A	50	19.5	20	-	-	80	54	M6x1	DSK6	0.80
	GSK10-75	A	50	27	27.5	-	-	75	49	-	DSK10	1.00
	GSK10-100P	A	50	27	27.5	-	-	100	74	M10x1.5	DSK10	1.20
	GSK16-80	A	50	40	40.5	-	-	80	54	-	DSK16	1.75
	GSK16-100P	A	50	40	40.5	-	-	100	74	M16x2	DSK16	2.00
	GSK20-100	A	50	48	48.5	-	-	100	74	-	DSK20	2.10
HSK63A-	GSK6-80P	A	63	19.5	20	-	-	80	54	M6x1	DSK6	0.85
	GSK6-100P	A	63	19.5	20	-	-	100	74	M6x1	DSK6	0.95
	GSK10-75	A	63	27	27.5	-	-	75	49	-	DSK10	1.00
	GSK10-100P	A	63	27	27.5	-	-	100	74	M10x1.5	DSK10	1.40
	GSK16-80	A	63	40	40.5	-	-	80	54	-	DSK16	2.00
	GSK16-100P	A	63	40	40.5	-	-	100	74	M16x2	DSK16	2.30
	GSK16-120P	A	63	40	40.5	-	-	120	94	M16x2	DSK16	2.50
	GSK20-100	A	63	48	48.5	-	-	100	74	-	DSK20	2.45
	GSK20-120P	A	63	48	48.5	-	-	120	94	M16x2	DSK20	2.65
	GSK25-100	A	63	55	55	-	-	100	74	-	DSK25	2.30
	GSK25-120P	A	63	55	55	-	-	120	94	M20x2	DSK25	2.70
HSK100A-	GSK10-105P	B	100	27	27.5	40.3	30°	105	76	M10x1.5	DSK10	2.60
	GSK10-135P	B	100	27	27.5	40.3	30°	135	106	M10x1.5	DSK10	2.80
	GSK16-105P	A	100	40	40.5	-	-	105	76	M16x2	DSK16	2.80
	GSK16-135P	A	100	40	40.5	-	-	135	106	M16x2	DSK16	3.10
	GSK20-120P	A	100	48	48.5	-	-	120	91	M16x2	DSK20	3.00
	GSK20-150P	A	100	48	48.5	-	-	150	121	M16x2	DSK20	3.30
	GSK25-120P	A	100	55	55	-	-	120	91	M20x2	DSK25	3.20
	GSK25-150P	A	100	55	55	-	-	150	121	M20x2	DSK25	3.50

注：筒夾與扳手需單獨另購，可選配中心出水螺帽與端面出水螺帽詳見B73頁。
Notice: Collets and wrenchs shall be ordered separately.

特點 / Feature

■動平衡設定: G2.5；25,000 rpm。
■3D處徑向跳動0.005 mm。
■Balanced: G2.5; 25,000 rpm;
■Runout (X3D): < 0.005 mm.

ER

HSK-A-ER Spring Collet Chuck
HSK-A-ER彈性筒夾本體



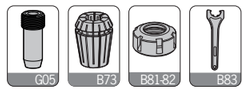

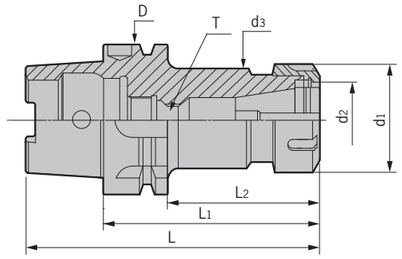

型號 Specification		D	d_1	d_2	L_1	L_2	L	T	重量 Weight
HSK40A-	ER20-80	40	34	20	80	60	100	-	0.55
	ER25-80	40	42	25	80	60	100	-	0.65
	ER32-100	40	50	32	100	80	120	M10X1.5P	0.90
HSK50A-	ER16-75	50	28	16	75	34	85	-	0.50
	ER16-100	50	28	16	100	74	125	M10X1.5P	0.60
	ER20-75	50	34	20	75	44	95	-	0.70
	ER20-100	50	34	20	100	74	125	M12X1.75P	0.90
	ER25-80	50	42	25	80	44	95	M16X2.0P	1.00
	ER25-100	50	42	25	100	74	125	-	1.10
	ER25-135	50	42	25	135	109	160	M16X2.0P	1.40
	ER32-100	50	50	32	100	74	125	-	1.45
	ER32-135	50	50	32	135	109	160	M16X2.0P	1.90
	ER32-160	50	50	32	160	134	185	M16X2.0P	2.40
HSK63A-	ER16-75	63	28	16	75	49	107	-	1.00
	ER16-100	63	28	16	100	74	132	M10X1.5P	1.10
	ER16-120	63	28	16	120	94	152	M10X1.5P	1.20
	ER16-160	63	28	16	160	134	192	M10X1.5P	1.40
	ER20-80	63	34	20	80	49	107	-	1.00
	ER20-100	63	34	20	100	74	132	M12X1.75P	1.20
	ER20-120	63	34	20	120	94	152	M12X1.75P	1.30
	ER20-160	63	34	20	160	134	192	M12X1.75P	1.70
	ER25-80	63	42	25	80	49	107	-	1.10
	ER25-100	63	42	25	100	74	132	M16X2.0P	1.40
	ER25-120	63	42	25	120	94	152	M16X2.0P	1.80
	ER25-150	63	42	25	150	124	182	M16X2.0P	2.00
	ER32-100	63	50	32	100	74	132	-	1.60
	ER32-125	63	50	32	125	99	157	M16X2.0P	2.00
	ER32-160	63	50	32	160	134	192	M16X2.0P	2.50
	ER40-100	63	63	40	100	74	132	-	2.40
	ER40-120	63	63	40	120	94	152	M20X2.0P	2.60
	ER40-160	63	63	40	160	134	192	M20X2.0P	2.95
HSK100A-	ER16-100	100	28	16	100	71	150	M10X1.5P	3.40
	ER16-160	100	28	16	160	131	210	M10X1.5P	3.70
	ER20-100	100	34	20	100	71	150	M12X1.75P	3.50
	ER20-160	100	34	20	160	131	210	M12X1.75P	3.90
	ER25-100	100	42	25	100	71	150	M16X2.0P	3.70
	ER25-160	100	42	25	160	131	210	M16X2.0P	4.20
	ER25-200	100	42	25	200	171	250	M16X2.0P	4.70
	ER32-100	100	50	32	100	71	150	-	3.90
	ER32-160	100	50	32	160	131	210	M16X2.0P	4.70
	ER32-200	100	50	32	200	171	250	M16X2.0P	5.20

轉下頁
See next page

ER/VER

HSK-A-ER Spring Collet Chuck
HSK-A-ER彈性筒夾本體

型號 Specification		D	d_1	d_2	L_1	L_2	L	T	重量 Weight
HSK100A-	ER40-100	100	63	40	100	71	150	M20X2.0P	4.30
	ER40-160	100	63	40	160	131	210	M20X2.0P	5.00
	ER40-200	100	63	40	200	171	250	M20X2.0P	5.60

注：筒夾和扳手需單獨訂購。
Notice: Collets and wrenchs shall be ordered separately.

特點 / Feature

■動平衡設定: G6.3； 15,000 rpm。
■3D處徑向跳動0.02 mm。

■Balanced: G6.3; 15,000 rpm;
■Runout (X3D): < 0.02 mm.

HSK-A-VER Tapping Chuck
HSK-A-VER快換式微補償攻牙刀柄

NEW



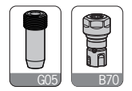

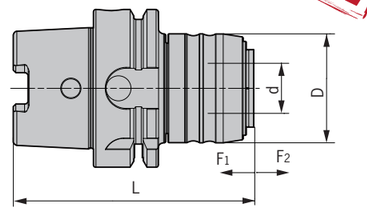

型號 Specification		D	d	L	F_1	F_2	攻牙能力 Tapping capacity	適用延長杆 Suit extender	重量 Weight
HSK40A-	VER16-69	43.5	20	69	0.2	1	M3-M12	VER16-M24	0.54
	VER20-80	52	25	80	0.2	1	M5-M16	VER20-M26	0.59
	VER25-90	60	32	90	0.2	1	M6-M20	VER25-M28	0.65
HSK50A-	VER16-70	43.5	20	70	0.2	1	M3-M12	VER16-M24	0.66
	VER20-87	52	25	87	0.2	1	M5-M16	VER20-M26	0.80
	VER25-97	60	32	97	0.2	1	M6-M20	VER25-M28	0.96
HSK63A-	VER16-64	43.5	20	64	0.2	1	M3-M12	VER16-M24	0.88
	VER20-87	52	25	87	0.2	1	M5-M16	VER20-M26	1.06
	VER25-97	60	32	97	0.2	1	M6-M20	VER25-M28	1.21
	VER32-113	72	40	113	0.2	1	M10-M24	VER32-M30	1.61
	VER40-122	87	50	122	0.2	1	M14-M33	VER40-M32	1.85
HSK100A-	VER16-70	43.5	20	70	0.2	1	M3-M12	VER16-M24	3.21
	VER20-82	52	25	82	0.2	1	M5-M16	VER20-M26	3.58
	VER25-91	60	32	91	0.2	1	M6-M20	VER25-M28	3.95
	VER32-110	72	40	110	0.2	1	M10-M24	VER32-M30	4.25
	VER40-115	87	50	115	0.2	1	M14-M33	VER40-M32	4.45

注：筒夾和扳手需單獨訂購。
Notice: Collets and wrenchs shall be ordered separately.

特點 / Feature

■顯著提高絲錐使用壽命80%以上。
■有效提高加工生產效率2-4倍。
■明顯提高表面加工質量與精度。
■選用ER攻絲專用筒夾夾持。
■無需依賴設備精度。
■擠壓絲錐首選。

■Tap tool life increased by 80% and above;
■Work efficiency increased 2 to 4 times;
■Better surface quality;
■With ER tapping collet;
■Best choice for squeeze taps.

TPG

HSK-A-TPG Rigid Tapping Chuck
HSK-A-TPG剛性攻牙刀柄

NEW



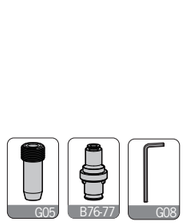

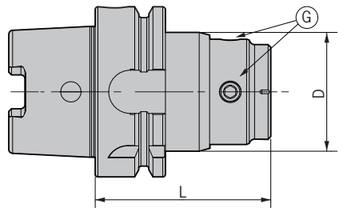

型號 Specification		D	L	G	適用筒夾 Suit collet		攻牙能力 Tapping capacity	重量 Weight
HSK63A-	TPG312	44	65	M8X1P	TPE312	L06	M3-M12	0.89
	TPG1022	56	94	M10X1P	TPE1024		M10-M24	1.54
HSK100A-	TPG312	44	70	M8X1P	TPE312	L06	M3-M12	2.31
	TPG1022	56	80	M10X1P	TPE1024		M10-M24	2.48

注：筒夾需單獨訂購。
Notice: Collets shall be ordered separately.

特點 / Feature

■適用于高精度同步數控加工。
■由主軸中心提供內冷却。
■爲達到高速攻絲的剛性設計。
■短型且緊凑的設計。

■For high precision tapping;
■With internal coolant hole;
■Design for high speed and rigid tapping;
■Short and compact design.

HPM/HPC

HSK-A-HPM High Speed Milling Chuck
HSK-A-HPM高速精密强力銑刀夾頭



MAX 30,000 min⁻¹

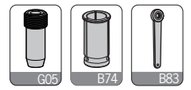

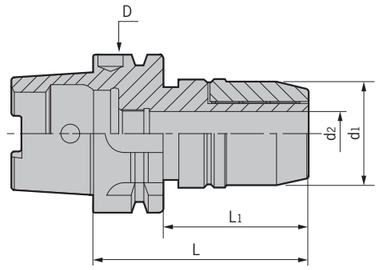

型號 Specification		夾持範圍 Clamping range	D	d1	d2	L1	L	適用筒夾 Suit collet	重量 Weight
HSK50A-	HPM16-80	3-16	50	46	16	54	80	SC16	1.00
HSK63A-	HPM16-80	3-16	63	46	16	54	80	SC16	1.30
	HPM16-100	3-16	63	46	16	74	100	SC16	1.50
	HPM20-110	6-20	63	55	20	59	110	SC20	1.70
	HPM32-110	6-32	63	68	32	89	110	SC32	2.50
HSK100A-	HPM16-115	3-16	100	46	16	86	115	SC16	3.60
	HPM20-105	6-20	100	55	20	86	105	SC20	4.20
	HPM32-105	6-32	100	68	32	86	105	SC32	4.50
	HPM32-135	6-32	100	68	32	86	135	SC32	5.00

注：報價時含扳手，筒夾需單獨訂購。
Notice:Wrench is included,while collet shall be ordered separately.

特點 / Feature

■動平衡設定: G2.5；20,000 rpm。
■3D處徑向跳動0.02 mm。

■Balanced: G2.5; 20,000 rpm;
■Runout (X3D): < 0.02 mm.

HSK-A-HPC High Speed Milling Chuck
HSK-A-HPC高速精密强力銑刀夾頭



MAX 30,000 min⁻¹

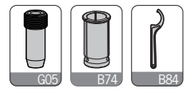

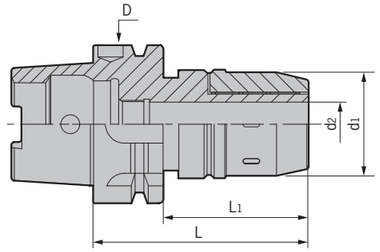

型號 Specification		夾持範圍 Clamping range	D	d1	d2	L1	L	適用筒夾 Suit collet	重量 Weight
HSK63A-	HPC20-110	6-20	63	51.5	20	84	110	SC20	1.60
	HPC32-110	6-32	63	70.5	32	84	110	SC32	2.20
HSK100A-	HPC20-105	6-20	100	51.5	20	79	105	SC20	4.10
	HPC32-105	6-32	100	70.5	32	79	105	SC32	4.90
	HPC32-135	6-32	100	70.5	32	109	135	SC32	5.80
	HPC42-115	6-32	100	86	42	89	115	SC42	5.50

注：報價時含扳手，筒夾需單獨訂購。
Notice:Wrench is included,while collet is to be ordered separately.

特點 / Feature

■動平衡設定: G6.3；15,000 rpm。
■3D處徑向跳動0.02 mm。

■Balanced: G6.3; 15,000 rpm;
■Runout (X3D): < 0.02 mm.

SLN

HSK-A-SLN Side-lock Holder
HSK-A-SLN側固式刀柄





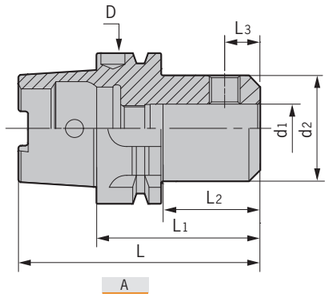

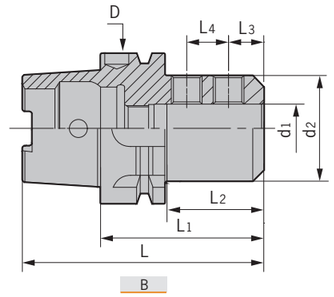

型號 Specification		圖示 Figure	D	d_1	d_2	L_1	L_2	L_3	L_4	L	側面壓緊螺釘 Side-lock screw	重量 Weight
HSK50A-	SLN6-65	A	50	6	25	65	39	18	-	90	M060U080	0.70
	SLN8-65	A	50	8	28	65	39	18	-	90	M080U080	0.80
	SLN10-65	A	50	10	35	65	39	20	-	90	M100U120	0.80
	SLN12-80	A	50	12	42	80	54	22.5	-	105	M120U140	1.20
	SLN16-80	A	50	16	48	80	54	24	-	105	M140U160	1.30
	SLN20-80	A	50	20	52	80	54	25	-	105	M160U250	1.50
HSK63A-	SLN6-65	A	63	6	25	65	39	18	-	97	M060U080	0.90
	SLN6-100	A	63	6	25	100	74	18	-	132	M060U080	1.30
	SLN8-65	A	63	8	28	65	39	18	-	97	M080U100	1.00
	SLN8-100	A	63	8	28	100	74	18	-	132	M080U100	1.40
	SLN10-65	A	63	10	35	65	39	20	-	97	M100U120	1.00
	SLN10-100	A	63	10	35	100	74	20	-	132	M100U120	1.50
	SLN12-80	A	63	12	42	80	54	22.5	-	112	M120U140	1.70
	SLN12-120	A	63	12	42	120	94	22.5	-	152	M120U140	2.00
	SLN16-80	A	63	16	48	80	54	24	-	112	M140U160	1.70
	SLN16-120	A	63	16	48	120	94	24	-	152	M140U160	2.10
	SLN20-80	A	63	20	52	80	54	25	-	112	M160U160	1.80
	SLN20-120	A	63	20	52	120	94	25	-	152	M160U160	2.40
	SLN25-110	B	63	25	65	110	84	24	25	142	M180Z160P	2.50
	SLN25-160	B	63	25	65	160	134	24	25	192	M180Z160P	2.65
	SLN32-110	B	63	32	72	110	84	24	28	142	M200Z200P	2.70
	SLN32-160	B	63	32	72	160	134	24	28	192	M200Z200P	3.00
HSK100A-	SLN6-80	A	100	6	25	80	51	18	-	130	M060U080	3.00
	SLN6-130	A	100	6	25	130	131	18	-	180	M060U080	3.20
	SLN8-80	A	100	8	25	80	51	18	-	130	M080U100	3.20
	SLN8-130	A	100	8	25	130	131	18	-	180	M080U100	3.40
	SLN10-80	A	100	10	35	80	51	20	-	130	M100U120	3.40
	SLN10-130	A	100	10	35	130	131	20	-	180	M100U120	3.70
	SLN12-80	A	100	12	42	80	51	22.5	-	130	M120U140	3.40
	SLN12-130	A	100	12	42	130	131	22.5	-	180	M120U140	3.70
	SLN16-100	A	100	16	48	100	71	24	-	150	M140U160	3.80
	SLN16-160	A	100	16	48	160	71	24	-	210	M140U160	4.10
	SLN20-100	A	100	20	52	100	71	25	-	150	M180Z160P	3.90
	SLN20-160	A	100	20	52	160	71	25	-	210	M180Z160P	3.80
	SLN25-100	B	100	25	65	100	71	24	25	150	M200Z200P	4.00
	SLN25-160	B	100	25	65	160	71	24	25	210	M200Z200P	4.40
	SLN32-100	B	100	32	72	100	71	24	28	150	M200Z200P	4.10
	SLN32-160	B	100	32	72	160	71	24	28	210	M200Z200P	4.50

注：扳手需單獨訂購。
Notice: Wrenchs shall be ordered separately.

SLNB/MTA

HSK-A-SLNB Side-lock Holder
HSK-A-SLNB側固式刀柄





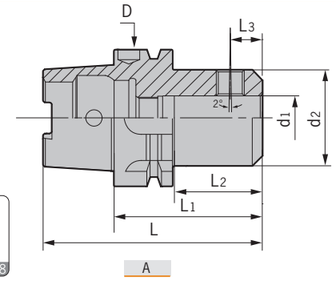

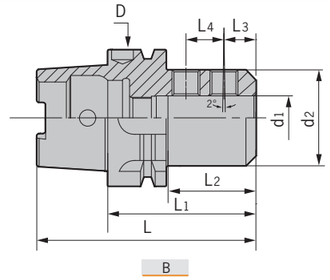

型號 Specification		圖示 Figure	D	d_1	d_2	L_1	L_2	L_3	L_4	L	側面壓緊螺釘 Side-lock screw	重量 Weight
HSK63A-	SLNB6-80	A	63	6	25	80	54	18	-	112	M060U080	0.90
	SLNB8-80	A	63	8	28	80	54	18	-	112	M080U080	1.00
	SLNB10-80	A	63	10	35	80	54	20	-	112	M100U120	1.00
	SLNB12-90	A	63	12	42	90	64	22.5	-	122	M120U140	1.70
	SLNB16-100	A	63	16	48	100	74	24	-	132	M140U160	1.70
	SLNB20-100	A	63	20	52	100	74	25	-	132	M160U250	1.80
	SLNB25-110	B	63	25	65	110	84	24	22	142	M180Z160P	2.50
	SLNB32-110	B	63	32	72	110	84	24	24	142	M200Z200P	2.70
HSK100A-	SLNB6-90	A	100	6	25	90	61	18	-	140	M060U080	3.00
	SLNB8-90	A	100	8	28	90	61	18	-	140	M080U080	3.20
	SLNB10-90	A	100	10	35	90	61	20	-	150	M100U120	3.40
	SLNB12-100	A	100	12	42	100	71	22.5	-	150	M120U140	3.40
	SLNB16-100	A	100	16	48	100	71	24	-	150	M140U160	3.80
	SLNB20-110	A	100	20	52	110	81	25	-	160	M160U250	3.90
	SLNB25-120	B	100	25	65	120	91	24	22	170	M180Z160P	4.00
	SLNB32-120	B	100	32	72	120	91	24	24	170	M200Z200P	4.10

HSK-A-MTA Morse Taper Adapter
HSK-A-MTA莫式錐套刀柄（鑽頭套筒）





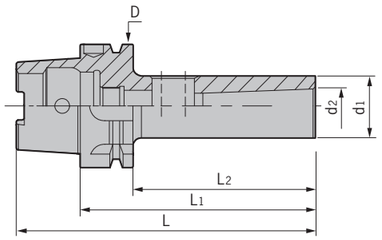

型號 Specification		D	d_1	d_2	L_1	L_2	L_3	L	重量 Weight
HSK50A-	MTA1-100	50	25	12.065	100	74	56	125	1.50
	MTA2-120	50	32	17.780	120	94	67	145	1.80
	MTA3-140	50	40	23.825	140	114	84	165	1.90
HSK63A-	MTA1-100	63	25	12.065	100	74	56	132	1.90
	MTA2-120	63	32	17.780	120	94	67	152	2.00
	MTA3-140	63	40	23.825	140	114	84	172	2.20
	MTA4-160	63	48	31.267	160	134	107	192	2.50
HSK100A-	MTA1-110	100	25	12.065	110	81	56	160	3.40
	MTA2-120	100	32	17.780	120	91	67	170	3.80
	MTA3-150	100	40	23.825	150	121	84	200	4.00
	MTA4-170	100	48	31.267	170	141	107	220	4.60
	MTA5-200	100	63	44.299	200	171	135	250	5.20

SPU/FMB

HSK-A-SPU Drill Chuck Holder
HSK-A-SPU直結式鑽夾頭刀柄



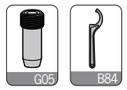

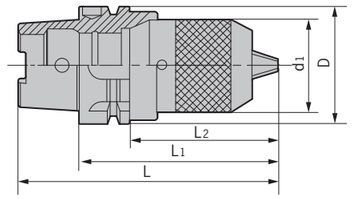

型號 Specification		D	d_1	d_2	L_1	L_2	L_3	L	偏擺精度 3D	重量 Weight
HSK50A-	SPU8-120	50	50	8	120	99	55	167	0.05	1.61
HSK63A-	SPU13-150	63	50	13	150	124	55	194	0.05	2.65
	SPU16-155	63	57	16	155	129	55	199	0.05	3.12
HSK100A-	SPU13-155	100	50	13	155	130	75	217	0.05	4.23
	SPU16-160	100	57	16	160	135	75	222	0.05	4.55

注：報價時含扳手。
Notice:Wrench is included.

HSK-A-FMB Face Mill Holder
HSK-A-FMB平面銑刀柄



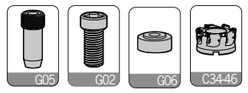

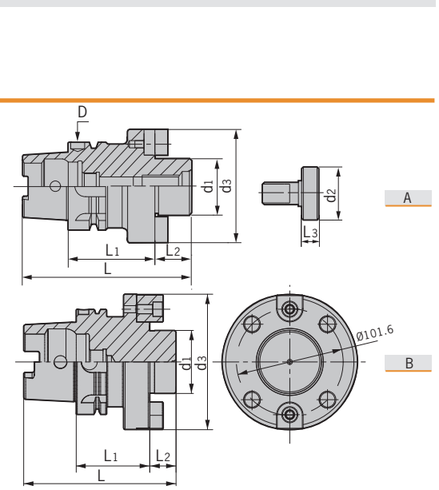

型號 Specification		圖示 Figure	D	d_1	d_2	d_3	L_1	L_2	L_3	L	刀盤鎖緊螺釘 Locking screw for cutter	墊圈 Washer	重量 Weight
HSK50A-	FMB22-60	A	50	22	26	48	60	18	14	104	E100U300	-	1.00
	FMB27-60	A	50	27	31.5	60	60	20	16	106	E120U300	FM-1	1.10
HSK63A-	FMB22-50	A	63	22	26	48	50	18	-	101	E100U300	-	1.30
	FMB22-100	A	63	22	26	48	100	18	-	151	E100U300	-	1.80
	FMB27-60	A	63	27	31.5	60	60	20	16	113	E120U300	FM-1	1.60
	FMB27-100	A	63	27	31.5	60	100	20	16	153	E120U300	FM-1	2.30
	FMB32-60	A	63	32	41	78	60	22	16	116	E160U350	FM-2	2.00
	FMB32-100	A	63	32	41	78	100	22	16	156	E160U350	FM-2	2.80
	FMB40-60	A	63	40	48	80	60	25	20.5	119	E200U350	FM-3	2.20
HSK100A-	FMB22-50	A	100	22	26	48	50	18	14	119	E100U300	-	2.90
	FMB22-100	A	100	22	26	48	100	18	14	169	E100U300	-	3.90
	FMB27-50	A	100	27	31.5	60	50	20	16	121	E120U300	FM-1	2.90
	FMB27-100	A	100	27	31.5	60	100	20	16	171	E120U300	FM-1	3.70
	FMB32-50	A	100	32	41	78	50	22	16	124	E160Z500-40	-	3.80
	FMB32-100	A	100	32	41	78	100	22	16	174	E160Z500-40	-	4.80
	FMB40-60	A	100	40	48	80	60	25	20.5	137	E200Z500-50	-	4.10
	FMB40-100	A	100	40	48	80	100	25	20.5	177	E200Z500-50	-	4.90
	FMB60F-70	B	100	60	-	129	70	25	101.6	160	E160U500	-	5.50

DHP

BT-DHP Hydraulic Chuck
BT-DHP 液壓刀柄

NEW



MAX 30,000 min⁻¹

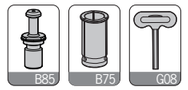

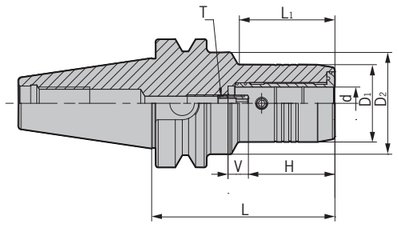

型號 Specification		d	D_1	D_2	L	H	V	L_1	T	適用筒夾 Suit collet	扳手 Wrench	重量 Weight
BT30-	DHP6-70	6	28	45	70	27.5	10	28	M5X0.8	-	T04	0.68
	DHP8-70	8	30	45	70	27.5	10	28	M6X1.0	-	T04	0.71
	DHP10-75	10	32	45	75	32.5	10	38	M6X1.0	-	T04	0.73
	DHP12-75	12	34	45	75	37.5	10	36	M6X1.0	D12/OD12	T04	0.78
	DHP14-85	14	36	45	85	37.5	10	44	M6X1.0	-	T04	0.83
	DHP16-90	16	38	45	90	42.5	10	48	M8X1.0	-	T04	0.92
	DHP18-90	18	41	45	90	42.5	10	48	M8X1.0	-	T04	0.95
	DHP20-90	20	43	-	90	42.5	10	-	M8X1.0	D20/OD20	T04	0.98
BT40-	DHP6-65	6	28	50	65	27.5	10	23	M5X0.8	-	T04	1.26
	DHP6-90	6	28	50	90	27.5	10	44	M5X0.8	-	T04	1.42
	DHP6-140	6	28	50	140	27.5	10	44	M5X0.8	-	T04	2.16
	DHP8-65	8	30	50	65	27.5	10	23	M6X1.0	-	T04	1.26
	DHP8-90	8	30	50	90	27.5	10	39	M6X1.0	-	T04	1.43
	DHP8-140	8	30	50	140	27.5	10	44	M6X1.0	-	T04	2.20
	DHP10-65	10	32	50	65	32.5	10	23	M6X1.0	-	T04	1.26
	DHP10-90	10	32	50	90	32.5	10	44	M6X1.0	-	T04	1.45
	DHP10-140	10	32	50	140	32.5	10	44	M6X1.0	-	T04	2.40
	DHP12-65	12	34	50	65	37.5	10	23	M6X1.0	D12/OD12	T04	1.26
	DHP12-90	12	34	50	90	37.5	10	44	M6X1.0	D12/OD12	T04	1.46
	DHP12-140	12	34	50	140	37.5	10	44	M6X1.0	D12/OD12	T04	2.60
	DHP14-65	14	36	50	65	37.5	10	23	M6X1.0	-	T04	1.26
	DHP14-90	14	36	50	90	37.5	10	44	M6X1.0	-	T04	1.48
	DHP14-140	14	36	50	140	37.5	10	44	M6X1.0	-	T04	2.80
	DHP16-65	16	38	50	65	42.5	10	23	M8X1.0	-	T04	1.27
	DHP16-90	16	38	50	90	42.5	10	48	M8X1.0	-	T04	1.50
	DHP16-140	16	38	50	140	42.5	10	48	M8X1.0	-	T04	2.80
	DHP18-75	18	41	50	75	42.5	10	30	M8X1.0	-	T04	1.35
	DHP18-90	18	41	50	90	42.5	10	48	M8X1.0	-	T04	1.53
	DHP18-140	18	41	50	140	42.5	10	48	M8X1.0	-	T04	2.85
	DHP19-75	19	43	50	75	101	10	30	M8X1.0	-	T04	1.38
	DHP20-75	20	43	50	75	42.5	10	30	M8X1.0	D20/OD20	T04	1.40
	DHP20-90	20	43	50	90	42.5	10	48	M8X1.0	D20/OD20	T04	1.56
	DHP20-140	20	43	50	140	42.5	10	48	M8X1.0	D20/OD20	T04	2.89
	DHP24-75	24	63	-	75	94	10	-	M16X1.0	-	T05	2.02
	DHP25-100	25	57	-	100	51	10	73	M16X1.0	-	T05	2.05
	DHP25-135	25	57	-	135	51	10	108	M16X1.0	-	T05	2.75
	DHP32-105	32	63	-	100	55	10	-	M16X1.0	D32/OD32	T05	2.28
	DHP32-135	32	63	-	135	55	10	-	M16X1.0	D32/OD32	T05	2.95

轉下頁
See next page

DHP

BT-DHP Hydraulic Chuck
BT-DHP 液壓刀柄

NEW



MAX 30,000 min⁻¹

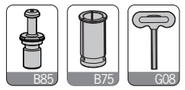

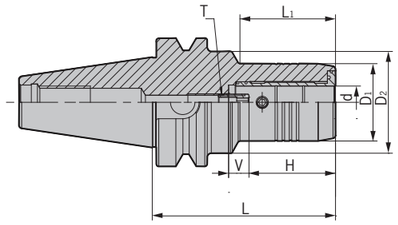

型號 Specification		d	D1	D2	L	H	V	L1	T	適用筒夾 Suit collet	扳手 Wrench	重量 Weight
BT50-	DHP6-90	6	28	50	90	27.5	10	23	M5X0.8	-	T04	4.03
	DHP6-120	6	28	50	120	27.5	10	44	M5X0.8	-	T04	4.35
	DHP6-140	6	28	50	140	27.5	10	44	M5X0.8	-	T04	4.65
	DHP8-90	8	30	50	90	27.5	10	23	M6X1.0	-	T04	4.05
	DHP8-120	8	30	50	120	27.5	10	40	M6X1.0	-	T04	4.42
	DHP8-140	8	30	50	140	27.5	10	44	M6X1.0	-	T04	4.68
	DHP10-90	10	32	50	90	32.5	10	23	M6X1.0	-	T04	4.06
	DHP10-120	10	32	50	120	32.5	10	44	M6X1.0	-	T04	4.41
	DHP10-140	10	32	50	140	32.5	10	44	M6X1.0	-	T04	4.71
	DHP12-90	12	34	50	90	37.5	10	23	M6X1.0	D12/OD12	T04	4.07
	DHP12-120	12	34	50	120	37.5	10	44	M6X1.0	D12/OD12	T04	4.43
	DHP12-140	12	34	50	140	37.5	10	44	M6X1.0	D12/OD12	T04	4.73
	DHP14-90	14	36	50	90	37.5	10	23	M6X1.0	-	T04	4.07
	DHP14-120	14	36	50	120	37.5	10	44	M6X1.0	-	T04	4.43
	DHP14-140	14	36	50	140	37.5	10	44	M6X1.0	-	T04	4.72
	DHP16-90	16	38	50	90	42.5	10	23	M8X1.0	-	T04	4.08
	DHP16-120	16	38	50	120	42.5	10	48	M8X1.0	-	T04	4.43
	DHP16-140	16	38	50	140	42.5	10	48	M8X1.0	-	T04	4.73
	DHP18-90	18	41	50	90	42.5	10	32	M8X1.0	-	T04	4.10
	DHP18-120	18	41	50	120	42.5	10	48	M8X1.0	-	T04	4.47
	DHP18-140	18	41	50	140	42.5	10	48	M8X1.0	-	T04	4.75
	DHP20-90	20	43	50	90	42.5	10	32	M8X1.0	D20/OD20	T04	4.11
	DHP20-120	20	43	50	120	42.5	10	48	M8X1.0	D20/OD20	T04	4.50
	DHP20-140	20	43	50	140	42.5	10	48	M8X1.0	D20/OD20	T04	4.79
	DHP25-105	25	57	-	105	51	10	67	M16X1.0	-	T05	4.60
	DHP25-150	25	57	-	150	51	10	112	M16X1.0	-	T05	5.40
	DHP32-115	32	63	-	115	55	10	77	M16X1.0	D32/OD32	T05	4.85
	DHP32-150	32	63	-	150	55	10	112	M16X1.0	D32/OD32	T05	5.67

注：報價時含扳手，筒夾需單獨訂購。
Notice:Wrench is included,while collet shall be ordered separately.

特 點 / Feature

■DHP刀具系列用途高轉速、高精密切削加工，切削效果佳。
■動平衡設定: G2.5； 20,000 rpm。
■3D處徑向跳動0.003 mm。

■For high-speed and high precision cutting;
■Balanced: G2.5; 20,000 rpm;
■Runout (X3D): < 0.003 mm.

DHP

BT-DHP Super Slim Hydraulic Chuck
BT-DHP 超細長液壓刀柄

NEW



MAX 30,000 min⁻¹

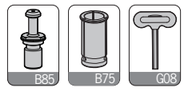

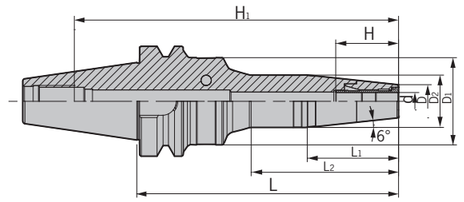

型號 Specification		d	D	D1	D2	L1	L2	L	H	H1	T	適用筒夾 Suit collet	扳手 Wrench	重量 Weight
BT30-	DHP6S-90	6	14	42	25	50	-	90	25	113	M5X0.8	-	T04	0.65
	DHP8S-90	8	17	42	28	50	-	90	31	113	M6X1	-	T04	0.67
	DHP10S-90	10	19	44	30	50	-	90	33	113	M6X1	-	T04	0.70
	DHP12S-90	12	21	46	32	50	-	90	36	113	M6X1	-	T04	0.72
BT40-	DHP6S-110	6	14	38	27	60	-	110	25	145	M5X0.8	-	T04	1.30
	DHP6S-150	6	14	48	26	57	85	150	25	185	M5X0.8	-	T04	1.60
	DHP8S-110	8	17	40	30	60	-	110	31	145	M6X1	-	T04	1.40
	DHP8S-150	8	17	50	28	52	85	150	31	185	M6X1	-	T04	1.70
	DHP10S-110	10	19	42	32	60	-	110	33	145	M6X1	-	T04	1.40
	DHP10S-150	10	19	50	30	52	85	150	33	185	M6X1	-	T04	1.70
	DHP12S-110	12	21	44	34	60	-	110	36	145	M6X1	D12/OD12	T04	1.40
	DHP12S-150	12	21	50	32	52	85	150	36	185	M6X1	D12/OD12	T04	1.80
BT50-	DHP6S-150	6	14	52	26	57	83	150	25	83	M5X0.8	-	T04	4.20
	DHP6S-200	6	14	56	26	57	100	200	25	100	M5X0.8	-	T04	4.60
	DHP8S-150	8	17	54	28	52	83	150	31	83	M6X1	-	T04	4.30
	DHP8S-200	8	17	58	28	52	100	200	31	100	M6X1	-	T04	4.70
	DHP10S-150	10	19	56	30	52	83	150	33	83	M6X1	-	T04	4.30
	DHP10S-200	10	19	60	30	52	100	200	33	100	M6X1	-	T04	4.80
	DHP12S-150	12	21	58	32	52	83	150	36	83	M6X1	D12/OD12	T04	4.40
	DHP12S-200	12	21	62	32	52	100	200	36	100	M6X1	D12/OD12	T04	4.80

注：報價時含扳手，筒夾需單獨訂購。
Notice:Wrench is included,while collet shall be ordered separately.

特 點 / Feature

■DHP刀具系列用途高轉速、高精密切削加工，切削效果佳。
■動平衡設定: G2.5； 20,000 rpm。
■3D處徑向跳動0.003 mm。

■For high-speed and high precision cutting;
■Balanced: G2.5; 20,000 rpm;
■Runout (X3D): < 0.003 mm.

SF

BT-SF Shrink Fit Holder
BT-SF燒結式熱裝刀柄（一體式）



MAX 50,000 min⁻¹



NEW

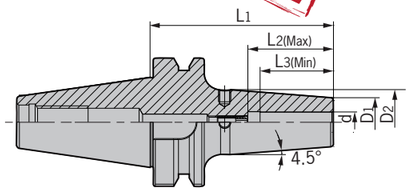

型號 Specification		d	D1	D2	L1	L2 (Max)	L3 (Min)	重量 Weight
BT30-	SF3-80	3	10	10	80	-	9	0.35
	SF4-80	4	10	10	80	-	12	0.40
	SF5-80	5	10	10	80	-	15	0.43
	SF6-80	6	21	27	80	28	18	0.45
	SF8-80	8	21	27	80	34	24	0.50
	SF10-80	10	24	32	80	40	30	0.55
	SF12-80	12	24	32	80	40	30	0.62
	SF14-80	14	27	34	80	42	32	0.65
	SF16-80	16	27	34	80	42	32	0.68
	SF18-80	18	33	42	80	50	40	0.71
	SF20-90	20	33	42	90	50	40	0.75
BT40-	SF3-90	3	10	10	90	-	9	1.00
	SF4-90	4	10	10	90	-	12	1.10
	SF5-90	5	10	10	90	-	15	1.00
	SF6-90	6	21	27	90	28	18	1.15
	SF6-130	6	21	27	130	28	18	1.20
	SF6-160	6	21	27	160	28	18	1.40
	SF6-200	6	21	27	200	28	18	1.90
	SF8-90	8	21	27	90	34	24	1.15
	SF8-130	8	21	27	130	34	24	1.30
	SF8-160	8	21	27	160	34	24	1.50
	SF8-200	8	21	27	200	34	24	1.90
	SF10-90	10	24	32	90	40	30	1.20
	SF10-130	10	24	32	130	40	30	1.50
	SF10-160	10	24	32	160	40	30	1.80
	SF10-200	10	24	32	200	40	30	1.90
	SF12-90	12	24	32	90	40	30	1.30
	SF12-130	12	24	32	130	40	30	1.60
	SF12-160	12	24	32	160	40	30	1.80
	SF12-200	12	24	32	200	40	30	2.00
	SF14-90	14	27	34	90	42	32	1.30
	SF14-130	14	27	34	130	42	32	1.60
	SF14-160	14	27	34	160	42	32	1.80
	SF14-200	14	27	34	200	42	32	2.00
	SF16-90	16	27	34	90	42	32	1.40
	SF16-130	16	27	34	130	42	32	1.70
	SF16-160	16	27	34	160	42	32	1.95
	SF16-200	16	27	34	200	42	32	2.20
	SF18-90	18	33	42	90	50	40	1.50
	SF18-130	18	33	42	130	50	40	1.80
	SF18-160	18	33	42	160	50	40	2.00
	SF18-200	18	33	42	200	50	40	2.30
	SF20-90	20	33	42	90	50	40	1.55

轉下頁
See next page

SF

BT-SF Shrink Fit Holder
BT-SF燒結式熱裝刀柄（一體式）



MAX 50,000 min⁻¹



NEW

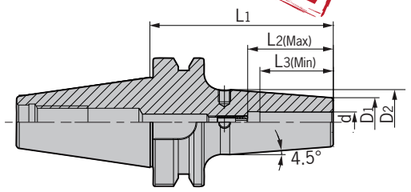

型號 Specification		d	D1	D2	L1	L2 (Max)	L3 (Min)	重量 Weight
BT40-	SF20-130	20	33	42	130	50	40	1.85
	SF20-160	20	33	42	160	50	40	2.05
	SF20-200	20	33	42	200	50	40	2.35
	SF25-100	25	44	53	100	55	45	1.65
	SF25-130	25	44	53	130	55	45	1.90
	SF25-160	25	44	53	160	55	45	2.20
	SF25-200	25	44	53	200	55	45	2.50
	SF32-100	32	44	53	100	60	50	2.00
	SF32-130	32	44	53	130	60	50	2.30
	SF32-160	32	44	53	160	60	50	2.60
BT50-	SF6-100	6	21	27	100	28	18	3.70
	SF6-130	6	21	27	130	28	18	3.80
	SF6-160	6	21	27	160	28	18	3.88
	SF6-200	6	21	27	200	28	18	4.00
	SF8-100	8	21	27	100	34	24	3.60
	SF8-130	8	21	27	130	34	24	3.70
	SF8-160	8	21	27	160	34	24	3.90
	SF8-200	8	21	27	200	34	24	4.00
	SF10-100	10	24	32	100	40	30	3.65
	SF10-130	10	24	32	130	40	30	3.78
	SF10-160	10	24	32	160	40	30	4.00
	SF10-200	10	24	32	200	40	30	4.15
	SF12-100	12	24	32	100	40	30	3.70
	SF12-130	12	24	32	130	40	30	3.80
	SF12-160	12	24	32	160	40	30	4.10
	SF12-200	12	24	32	200	40	30	4.25
	SF14-100	14	27	34	100	42	32	3.70
	SF14-130	14	27	34	130	42	32	3.80
	SF14-160	14	27	34	160	42	32	4.10
	SF14-200	14	27	34	200	42	32	4.25
	SF16-100	16	27	34	100	42	32	3.75
	SF16-130	16	27	34	130	42	32	3.88
	SF16-160	16	27	34	160	42	32	4.20
	SF16-200	16	27	34	200	42	32	4.50
	SF18-100	18	33	42	100	50	40	3.75
	SF18-130	18	33	42	130	50	40	3.88
	SF18-160	18	33	42	160	50	40	4.20
	SF18-200	18	33	42	200	50	40	4.50
	SF20-100	20	33	42	100	50	40	3.80
	SF20-130	20	33	42	130	50	40	4.00
	SF20-160	20	33	42	160	50	40	4.30
	SF20-200	20	33	42	200	50	40	4.60

轉下頁
See next page

加工中心刀柄 TOOL HOLDERS
HSK刀柄 HSK holder
BT刀柄 BT holder
SK刀柄 SK holder
ISO刀柄 ISO holder
刀柄配件 Holder accessories

SF/DSF

BT-SF Shrink Fit Holder
BT-SF燒結式熱裝刀柄（一體式）

型號 Specification		d	D_1	D_2	L_1	L_2 (Max)	L_3 (Min)	重量 Weight
BT50-	SF25-100	25	44	53	100	55	45	3.82
	SF25-130	25	44	53	130	55	45	4.05
	SF25-160	25	44	53	160	55	45	4.33
	SF25-200	25	44	53	200	55	45	4.65
	SF32-100	32	44	53	100	60	50	4.00
	SF32-130	32	44	53	130	60	50	4.40
	SF32-160	32	44	53	160	60	50	4.70
	SF32-200	32	44	53	200	60	50	5.00

特 點 / Feature

■動平衡設定: G2.5; 25,000 rpm。
■3D處徑向跳動0.003 mm。

■Balanced: G2.5; 25,000 rpm;
■Runout (X3D): < 0.003 mm.

BT-DSF Shrink Fit Holder
BT-DSF燒結式熱裝刀柄（分體式）

NEW



MAX 50,000 min⁻¹

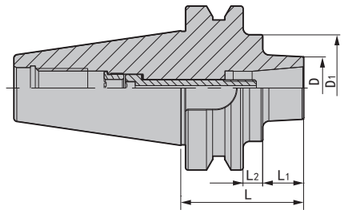

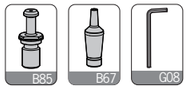

型號 Specification		D	D_1	L_1	L_2	L	L型扳手 Wrench	重量 Weight
BT30-	DSF12-35	38	-	13	-	35	L06	0.40
BT40-	DSF12-50	38	-	18	-	50	L06	1.10
	DSF12-75	38	-	48	-	75	L06	1.40
	DSF12-135	41	-	108	-	135	L06	2.20
BT50-	DSF12-75	38	65	25	12	75	L06	4.00
	DSF12-105	41	65	55	12	105	L06	4.40
	DSF12-135	41	65	85	12	135	L06	4.70

注：報價時含扳手。
Notice:Wrench is included.

特 點 / Feature

■動平衡設定: G2.5; 25,000 rpm。
■3D處徑向跳動0.003 mm。

■Balanced: G2.5; 25,000 rpm;
■Runout (X3D): < 0.003 mm.

DC

BT-DC Precision Slim Collet Chuck
BT-DC小徑精密夾頭本體



MAX 50,000 min⁻¹

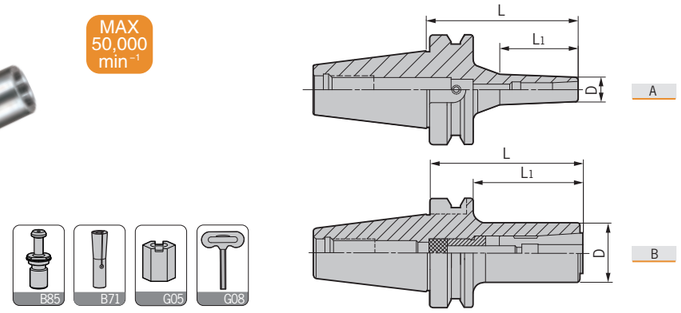

型號 Specification		圖示 Figure	D	L_1	L	適用筒夾 Suit collet	拉緊螺釘 Tension screw	止動螺母 Stop nut	扳手 Wrench	重量 Weight
BT30-	DC6-60	A	14	26	60	DC6	E050U350	ZD6-2	T04	0.90
	DC6-90	A	14	50	90	DC6	E050U650	ZD6-2	T04	1.10
	DC12-70	B	34	48	70	DC12	E100U350	ZD12-1	T08-L	0.60
BT40-	DC6-60	A	14	26	60	DC6	E050U450	ZD6-2	T04-L	1.02
	DC6-90	A	14	45	90	DC6	E050U450	ZD6-2	T04-L	1.05
	DC6-120	A	14	60	120	DC6	E050U800	ZD6-2	T04-L	1.08
	DC6-150	A	14	76	150	DC6	E050U1300	ZD6-2	T04-L	1.11
	DC8-90	A	22	53	90	DC8	E060U600	ZD8-1	T05-L	1.10
	DC8-120	A	22	65	120	DC8	E060U900	ZD8-1	T05-L	1.40
	DC10-90	B	28	63	90	DC10	E080U300	ZD10-2	T06-L	1.20
	DC10-120	A	28	60	120	DC10	E080U850	ZD10-1	T06-L	1.57
	DC12-70	B	34	43	70	DC12	E100U350	ZD12-1	T08-L	1.08
	DC12-90	B	34	63	90	DC12	E100U350	ZD12-1	T08-L	1.28
	DC12-120	B	34	93	120	DC12	E100U350	ZD12-1	T08-L	1.49
	DC12-150	B	34	123	150	DC12	E100U350	ZD12-1	T08-L	1.80
BT50-	DC10-110	A	28	57	110	DC10	E080U800	ZD12-1	T06-L	4.20
	DC10-150	A	28	75	150	DC10	E080U1200	ZD12-1	T06-L	4.32
	DC12-110	B	34	72	110	DC12	E100U350	ZD12-1	T08-L	4.70
	DC12-150	A	34	80	150	DC12	E100U1100	ZD12-1	T08-L	5.01

注：報價時含扳手，筒夾需單獨訂購。
Notice:Wrench is included,while collet shall be ordered separately.

特 點 / Feature

■動平衡設定: G2.5；30,000 rpm。
■3D處徑向跳動0.003 mm。

■Balanced: G2.5; 30,000 rpm;
■Runout (X3D): < 0.003 mm.

GSK

BT-GSK High Precision Chuck
BT-GSK高速精密筒夾本體



MAX 45,000 min⁻¹

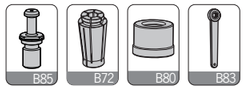

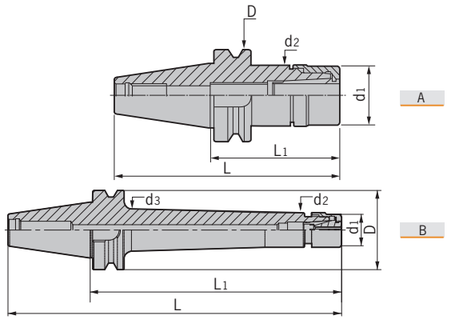

型號 Specification		圖示 Figure	D	d1	d2	d3	L	L1	T	適用筒夾 Suit collet	重量 Weight
BT30-	GSK6-70	A	46	19.5	20	-	118.4	70	M6x1	DSK6	0.45
	GSK6-100	A	46	19.5	20	-	148.4	100	M6x1	DSK6	0.64
	GSK10-70	A	46	27	27.5	-	118.4	70	M10x1.5	DSK10	0.46
	GSK10-100	A	46	27	27.5	-	148.4	100	M10x1.5	DSK10	0.70
	GSK16-70	A	46	40	40.5	-	118.4	70	M16x2	DSK16	0.70
	GSK16-100	A	46	40	40.5	-	148.4	100	M16x2	DSK16	1.00
	GSK16-120	A	46	40	40.5	-	168.4	120	M16x2	DSK16	1.25
	GSK16-150	A	46	40	40.5	-	198.4	150	M16x2	DSK16	1.35
	GSK20-70	A	46	48	48.5	-	118.4	70	M16x2	DSK20	0.75
	GSK20-100	A	46	48	48.5	-	148.4	100	M16x2	DSK20	1.15
	GSK25-100	A	46	55	55	-	148.4	100	M20x2	DSK25	1.20
BT40-	GSK6-70	A	63	19.5	20	-	135.4	70	M6x1	DSK6	1.05
	GSK6-100	A	63	19.5	20	-	165.4	100	M6x1	DSK6	1.25
	GSK6-120	A	63	19.5	20	-	185.4	120	M6x1	DSK6	1.39
	GSK6-150L	B	63	19.5	20	26.4	215.4	150	M6x1	DSK6	1.55
	GSK10-70	A	63	27	27.5	-	135.4	70	M10x1.5	DSK10	1.10
	GSK10-100	A	63	27	27.5	-	165.4	100	M10x1.5	DSK10	1.30
	GSK10-120	A	63	27	27.5	-	185.4	120	M10x1.5	DSK10	1.42
	GSK10-150	A	63	27	27.5	-	215.4	150	M10x1.5	DSK10	1.55
	GSK10-200L	B	63	27	27.5	33.7	265.4	200	M10x1.5	DSK10	1.85
	GSK16-70	A	63	40	40.5	-	135.4	70	M16x2	DSK16	1.21
	GSK16-100	A	63	40	40.5	-	165.4	100	M16x2	DSK16	1.42
	GSK16-120	A	63	40	40.5	-	185.4	120	M16x2	DSK16	1.61
	GSK16-150	A	63	40	40.5	-	215.4	150	M16x2	DSK16	1.80
	GSK16-200L	B	63	40	40.5	45.7	265.4	200	M16x2	DSK16	1.95
	GSK20-70	A	63	48	48.5	-	135.4	70	M16x2	DSK20	1.52
	GSK20-100	A	63	48	48.5	-	165.4	100	M16x2	DSK20	1.68
	GSK20-120	A	63	48	48.5	-	185.4	120	M16x2	DSK20	1.90
	GSK20-150	A	63	48	48.5	-	215.4	150	M16x2	DSK20	2.10
	GSK20-200L	B	63	48	48.5	55.7	265.4	200	M16x2	DSK20	2.30
	GSK25-100	A	63	55	55	-	165.4	100	M20x2	DSK25	1.81
	GSK25-120	A	63	55	55	-	185.4	120	M20x2	DSK25	2.05
	GSK25-150	A	63	55	55	-	215.4	150	M20x2	DSK25	2.30
	GSK25-200L	B	63	55	55	59.9	265.4	200	M20x2	DSK25	2.65
BT50-	GSK10-105	A	100	27	27.5	-	206.8	105	M10x1.5	DSK10	3.78
	GSK10-135	A	100	27	27.5	-	236.8	135	M10x1.5	DSK10	4.00
	GSK10-165	A	100	27	27.5	-	266.8	165	M10x1.5	DSK10	4.33
	GSK10-200L	B	100	27	27.5	35.2	301.8	200	M10x1.5	DSK10	4.75

轉下頁
See next page

GSK/DSK

BT-GSK High Precision Chuck
BT-GSK高速精密筒夾本體

型號 Specification		圖示 Figure	D	d1	d2	d3	L	L1	T	適用筒夾 Suit collet	重量 Weight
BT50-	GSK16-100	A	100	40	40.5	-	201.8	100	M16x2	DSK16	3.93
	GSK16-125	A	100	40	40.5	-	226.8	125	M16x2	DSK16	4.17
	GSK16-150	A	100	40	40.5	-	251.8	150	M16x2	DSK16	4.49
	GSK16-200L	B	100	40	40.5	48.4	301.8	200	M16x2	DSK16	5.50
	GSK16-250L	B	100	40	40.5	48.4	351.8	250	M16x2	DSK16	6.50
	GSK20-100	A	100	48	48.5	-	201.8	100	M16x2	DSK20	4.10
	GSK20-125	A	100	48	48.5	-	226.8	125	M16x2	DSK20	4.32
	GSK20-150	A	100	48	48.5	-	251.8	150	M16x2	DSK20	4.65
	GSK20-200	A	100	48	48.5	-	301.8	200	M16x2	DSK20	5.75
	GSK20-250L	B	100	48	48.5	55.4	351.8	250	M16x2	DSK20	6.78
	GSK20-300L	B	100	48	48.5	55.4	401.8	300	M16x2	DSK20	7.80
	GSK25-100	A	100	55	55	-	201.8	100	M20x2	DSK25	4.10
	GSK25-125	A	100	55	55	-	226.8	125	M20x2	DSK25	4.62
	GSK25-150	A	100	55	55	-	251.8	150	M20x2	DSK25	5.10
	GSK25-200	A	100	55	55	-	301.8	200	M20x2	DSK25	5.81
	GSK25-250L	B	100	55	55	61.4	351.8	250	M20x2	DSK25	6.85
	GSK25-300L	B	100	55	55	61.4	401.8	300	M20x2	DSK25	8.00

注：筒夾與扳手需單獨另購，可選配中心出水螺帽與端面出水螺帽詳見B73頁。
Notice: Collets and wrenchs shall be ordered separately.

特 點 / Feature

■動平衡設定: G2.5； 25,000 rpm。
■3D處徑向跳動0.005 mm。

■Balanced: G2.5; 25,000 rpm;
■Runout (X3D): < 0.005 mm.

BT-DSK High Precision Chuck
BT-DSK高速精密筒夾本體



MAX 35,000 min⁻¹

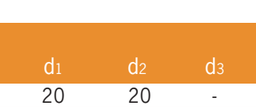

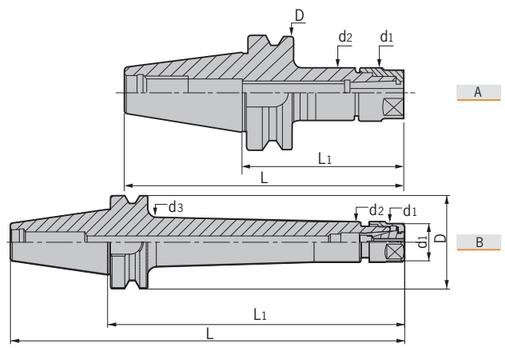

型號 Specification		圖示 Figure	D	d1	d2	d3	L	L1	T	適用筒夾 Suit collet	重量 Weight
BT30-	DSK6-70	A	46	20	20	-	118.4	70	M6x1	DSK6	0.45
	DSK6-100	A	46	20	20	-	148.4	100	M6x1	DSK6	0.64
	DSK10-70	A	46	27.5	27.5	-	118.4	70	M10x1.5	DSK10	0.46
	DSK10-100	A	46	27.5	27.5	-	148.4	100	M10x1.5	DSK10	0.70
	DSK16-70	A	46	40.5	40.5	-	118.4	70	M16x2	DSK16	0.70
	DSK16-100	A	46	40.5	40.5	-	148.4	100	M16x2	DSK16	1.00
	DSK16-120	A	46	40.5	40.5	-	168.4	120	M16x2	DSK16	1.25
	DSK16-150	A	46	40.5	40.5	-	198.4	150	M16x2	DSK16	1.35

轉下頁
See next page

DSK

BT-DSK High Precision Chuck
BT-DSK高速精密筒夾本體

型號 Specification		圖示 Figure	D	d1	d2	d3	L	L1	T	適用筒夾 Suit collet	重量 Weight
BT30-	DSK20-70	A	46	48.5	48.5	-	118.4	70	M16x2	DSK20	0.75
	DSK20-100	A	46	48.5	48.5	-	148.4	100	M16x2	DSK20	1.15
	DSK25-100	A	46	55	55	-	148.4	100	M20x2	DSK25	1.20
BT40-	DSK6-70	A	63	20	20	-	135.4	70	M6x1	DSK6	1.05
	DSK6-100	A	63	20	20	-	165.4	100	M6x1	DSK6	1.25
	DSK6-120	A	63	20	20	-	185.4	120	M6x1	DSK6	1.39
	DSK6-150L	B	63	20	20	26.4	215.4	150	M6x1	DSK6	1.55
	DSK10-70	A	63	27.5	27.5	-	135.4	70	M10x1.5	DSK10	1.10
	DSK10-100	A	63	27.5	27.5	-	165.4	100	M10x1.5	DSK10	1.30
	DSK10-120	A	63	27.5	27.5	-	185.4	120	M10x1.5	DSK10	1.42
	DSK10-150	A	63	27.5	27.5	-	215.4	150	M10x1.5	DSK10	1.55
	DSK10-200L	B	63	27.5	27.5	33.7	265.4	200	M10x1.5	DSK10	1.85
	DSK16-70	A	63	40.5	40.5	-	135.4	70	M16x2	DSK16	1.21
	DSK16-100	A	63	40.5	40.5	-	165.4	100	M16x2	DSK16	1.42
	DSK16-120	A	63	40.5	40.5	-	185.4	120	M16x2	DSK16	1.61
	DSK16-150	A	63	40.5	40.5	-	215.4	150	M16x2	DSK16	1.80
	DSK16-200L	B	63	40.5	40.5	45.7	265.4	200	M16x2	DSK16	1.95
	DSK20-70	A	63	48.5	48.5	-	135.4	70	M16x2	DSK20	1.52
	DSK20-100	A	63	48.5	48.5	-	165.4	100	M16x2	DSK20	1.68
	DSK20-120	A	63	48.5	48.5	-	185.4	120	M16x2	DSK20	1.90
	DSK20-150	A	63	48.5	48.5	-	215.4	150	M16x2	DSK20	2.10
	DSK20-200L	B	63	48.5	48.5	55.7	265.4	200	M16x2	DSK20	2.30
	DSK25-100	A	63	55	55	-	165.4	100	M20x2	DSK25	1.81
	DSK25-120	A	63	55	55	-	185.4	120	M20x2	DSK25	2.05
	DSK25-150	A	63	55	55	-	215.4	150	M20x2	DSK25	2.30
	DSK25-200L	B	63	55	55	59.9	265.4	200	M20x2	DSK25	2.65
BT50-	DSK10-105	A	100	27.5	27.5	-	206.8	105	M10x1.5	DSK10	3.78
	DSK10-135	A	100	27.5	27.5	-	236.8	135	M10x1.5	DSK10	4.00
	DSK10-165	A	100	27.5	27.5	-	266.8	165	M10x1.5	DSK10	4.33
	DSK10-200L	B	100	27.5	27.5	35.2	301.8	200	M10x1.5	DSK10	4.75
	DSK16-100	A	100	40.5	40.5	-	201.8	100	M16x2	DSK16	3.93
	DSK16-125	A	100	40.5	40.5	-	226.8	125	M16x2	DSK16	4.17
	DSK16-150	A	100	40.5	40.5	-	251.8	150	M16x2	DSK16	4.49
	DSK16-200L	B	100	40.5	40.5	48.4	301.8	200	M16x2	DSK16	5.50
	DSK16-250L	B	100	40.5	40.5	48.4	351.8	250	M16x2	DSK16	6.50
	DSK20-100	A	100	48.5	48.5	-	201.8	100	M16x2	DSK20	4.10
	DSK20-125	A	100	48.5	48.5	-	226.8	125	M16x2	DSK20	4.32
	DSK20-150	A	100	48.5	48.5	-	251.8	150	M16x2	DSK20	4.65
	DSK20-200	A	100	48.5	48.5	-	301.8	200	M16x2	DSK20	5.75
	DSK20-250L	B	100	48.5	48.5	55.4	351.8	250	M16x2	DSK20	6.78
	DSK20-300L	B	100	48.5	48.5	55.4	401.8	300	M16x2	DSK20	7.80
	DSK25-100	A	100	55	55	-	201.8	100	M20x2	DSK25	4.1
	DSK25-125	A	100	55	55	-	226.8	125	M20x2	DSK25	4.62
	DSK25-150	A	100	55	55	-	251.8	150	M20x2	DSK25	5.10
	DSK25-200	A	100	55	55	-	301.8	200	M20x2	DSK25	5.81
	DSK25-250L	B	100	55	55	61.4	351.8	250	M20x2	DSK25	6.85
	DSK25-300L	B	100	55	55	61.4	401.8	300	M20x2	DSK25	8.00

注：筒夾與扳手需單獨另購，可選配中心出水螺帽與端面出水螺帽詳見73頁。
Notice: Collets and wrenchs shall be ordered separately.

特 點 / Feature

■動平衡設定: G2.5； 20,000 rpm。
■3D處徑向跳動0.005 mm。

■Balanced: G2.5; 20,000 rpm;
■Runout (X3D): < 0.005 mm.

ER

BT-ER Spring Collet Chuck
BT-ER彈性筒夾本體





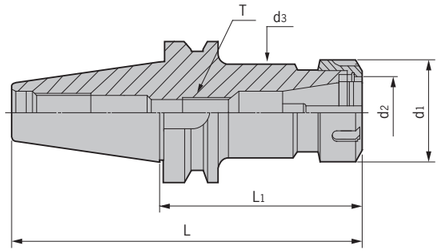

型號 Specification		d1	d2	d3	L1	L	T	重量 Weight
BT30-	ER16-70	28	16	28	70	118.4	M10X1.5P	0.52
	ER16-100	28	16	28	100	148.4	M10X1.5P	0.64
	ER16-120	28	16	28	120	168.4	M10X1.5P	0.73
	ER20-70	34	20	34	70	118.4	M12X1.75P	0.57
	ER20-100	34	20	34	100	148.4	M12X1.75P	0.76
	ER20-135	34	20	34	135	183.4	M12X1.75P	0.99
	ER25-70	42	25	42	70	118.4	M16X2.0P	0.66
	ER25-100	42	25	42	100	148.4	M16X2.0P	0.98
	ER25-135	42	25	42	135	183.4	M16X2.0P	1.31
	ER32-70	50	32	50	70	118.4	M16X2.0P	0.72
	ER32-100	50	32	50	100	148.4	M16X2.0P	1.14
	ER40-80	63	40	63	80	128.4	M16X2.0P	1.20
BT40-	ER16-70	28	16	28	70	135.4	M10X1.5P	1.08
	ER16-100	28	16	28	100	165.4	M10X1.5P	1.21
	ER16-125	28	16	28	125	190.4	M10X1.5P	1.30
	ER16-150	28	16	28	150	215.4	M10X1.5P	1.44
	ER20-70	34	20	34	70	135.4	M12X1.75P	1.12
	ER20-100	34	20	34	100	170.4	M12X1.75P	1.33
	ER20-125	34	20	34	125	190.4	M12X1.75P	1.48
	ER20-150	34	20	34	150	215.4	M12X1.75P	1.65
	ER25-70	42	25	42	70	135.4	M16X2.0P	1.22
	ER25-100	42	25	42	100	165.4	M16X2.0P	1.49
	ER25-125	42	25	42	125	190.4	M16X2.0P	1.71
	ER25-150	42	25	42	150	215.4	M16X2.0P	1.97
	ER32-70	50	32	50	70	135.4	M16X2.0P	1.27
	ER32-100	50	32	50	100	165.4	M16X2.0P	1.70
	ER32-150	50	32	50	150	215.4	M16X2.0P	2.39
	ER32-200	50	32	50	200	265.4	M16X2.0P	3.12
	ER40-80	63	40	63	80	145.4	M20X2.0P	1.62
	ER40-100	63	40	63	100	165.4	M20X2.0P	2.08
	ER40-120	63	40	63	120	185.4	M20X2.0P	2.55
	ER40-150	63	40	63	150	215.4	M20X2.0P	3.23
BT50-	ER16-70	28	16	28	70	171.8	M10X1.5P	3.67
	ER16-100	28	16	28	100	201.8	M10X1.5P	3.77
	ER16-135	28	16	28	135	236.8	M10X1.5P	3.95
	ER16-165	28	16	28	165	266.8	M10X1.5P	4.04
	ER20-70	34	20	34	70	171.8	M12X1.75P	3.66
	ER20-100	34	20	34	100	201.8	M12X1.75P	3.75
	ER20-135	34	20	34	135	236.8	M12X1.75P	4.08
	ER20-150	34	20	34	150	251.8	M12X1.75P	4.22
	ER20-200	34	20	34	200	301.8	M12X1.75P	4.66
	ER20-250	34	20	34	250	351.8	M12X1.75P	5.16
	ER25-70	42	25	42	70	171.8	M16X2.0P	3.64
	ER25-100	42	25	42	100	201.8	M16X2.0P	4.02

轉下頁
See next page

ER/VER

BT-ER Spring Collet Chuck
BT-ER彈性筒夾本體

型號 Specification		d1	d2	d3	L1	L	T	重量 Weight
BT50-	ER25-125	42	25	42	125	226.8	M16X2.0P	4.26
	ER25-150	42	25	42	150	251.8	M16X2.0P	4.54
	ER25-200	42	25	42	200	301.8	M16X2.0P	5.01
	ER25-250	42	25	42	250	351.8	M16X2.0P	5.52
	ER32-80	50	32	50	80	181.8	M16X2.0P	3.80
	ER32-100	50	32	50	100	201.8	M16X2.0P	4.07
	ER32-120	50	32	50	120	221.8	M16X2.0P	4.35
	ER32-150	50	32	50	150	251.8	M16X2.0P	4.82
	ER32-200	50	32	50	200	301.8	M16X2.0P	5.32
	ER32-250	50	32	50	250	351.8	M16X2.0P	5.92
	ER40-80	63	40	63	80	181.8	M20X2.0P	3.93
	ER40-100	63	40	63	100	201.8	M20X2.0P	4.38
	ER40-120	63	40	63	120	221.8	M20X2.0P	4.86
	ER40-150	63	40	63	150	251.8	M20X2.0P	5.51

注：筒夾和扳手需單獨訂購。
Notice: Collets and wrenchs shall be ordered separately.

BT- VER Tapping Chuck
BT- VER快換式微補償攻牙刀柄

NEW



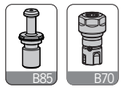

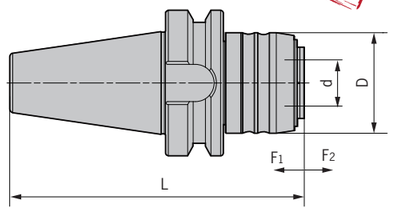

型號 Specification		D	d	L	F1	F2	攻牙能力 Tapping capacity	適用延長杆 Suit extender	重量 Weight
BT40-	VER16-61	43.5	20	61	0.2	1	M3-M12	VER16-M24	1.05
	VER20-72	52	25	72	0.2	1	M5-M16	VER20-M26	1.20
	VER25-82	60	32	82	0.2	1	M6-M20	VER25-M28	1.35
	VER32-98	72	40	98	0.2	1	M10-M24	VER32-M30	1.68
	VER40-107	87	50	107	0.2	1	M14-M33	VER40-M32	1.95
BT50-	VER16-72	43.5	20	72	0.2	1	M3-M12	VER16-M24	3.55
	VER20-72	52	25	83	0.2	1	M5-M16	VER20-M26	3.45
	VER25-93	60	32	93	0.2	1	M6-M20	VER25-M28	3.88
	VER32-109	72	40	109	0.2	1	M10-M24	VER32-M30	4.22
	VER40-124	87	50	124	0.2	1	M14-M33	VER40-M32	4.65

注：筒夾和扳手需單獨訂購。
Notice: Collets and wrenchs shall be ordered separately.

特點 / Feature

■顯著提高絲錐使用壽命80%以上。
■有效提高加工生產效率2-4倍。
■明顯提高表面加工質量與精度。
■選用ER攻絲專用筒夾夾持。
■無需依賴設備精度。
■擠壓絲錐首選。

■Tap tool life increased by 80% and above;
■Work efficiency increased 2 to 4 times;
■Better surface quality;
■With ER tapping collet;
■Best choice for squeeze taps.

TER

BT-TER Tapping Chuck
BT-TER伸縮攻牙器刀柄



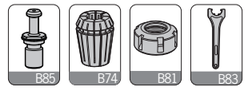

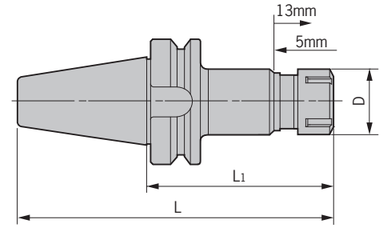

型號 Specification		D	L1	L	適用筒夾 Suit collet	攻牙能力 Tapping capacity	重量 Weight
BT30-	TER16	28	80	128.4	ER16	M3-M12	0.61
	TER20	34	90	138.4	ER20	M4-M16	0.75
BT40-	TER16	28	77	145.4	ER16	M3-M12	1.10
	TER20	34	86	154.4	ER20	M4-M16	1.22
	TER25	42	90	158.4	ER25	M5-M20	1.37
	TER32	50	94	162.4	ER32	M8-M27	1.52
	TER40	63	98	166.4	ER40	M12-M36	2.25
BT50-	TER16	28	80	181.8	ER16	M3-M12	3.80
	TER20	34	99	200.8	ER20	M4-M16	3.83
	TER25	42	97	198.8	ER25	M5-M20	3.91
	TER32	50	95	196.8	ER32	M8-M27	4.22
	TER40	63	117	218.8	ER40	M12-M36	4.51

注：筒夾和扳手需單獨訂購。
Notice: Collets and wrenchs shall be ordered separately.

特點 / Feature

■攻牙器使用ER筒夾夾持，請您在選購時認準ER筒夾內徑。
■本刀體的攻牙器頭部采用了浮動設計，攻螺紋時的扭距可通過內部鋼珠傳遞。
■本刀柄主要用于中心機和CNC銑床攻牙。
■Clamped with ER spring collect, please check the inn size of ER collet when you choose.
■The tapping head of this holder designed with floating tap, the tapping torque is transmitted through the ball inside the floating tap holder.
■Mainly used on machine centers and CNC milling machines.

TPG/TPM

BT-TPG Rigid Tapping Chuck
BT-TPG剛性攻牙刀柄



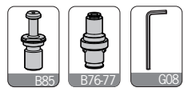

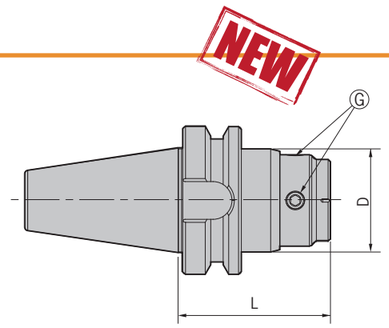

型號 Specification		D	L	G	適用筒夾 Suit collet	L型扳手 Wrench	攻牙能力 Tapping capacity	重量 Weight
BT30-	TPG312	44	65	M8X1P	TPE312	L06	M3-M12	0.73
	TPG1024	56	85	M10X1P	TPE1024	L08	M10-M24	0.89
BT40-	TPG312	44	65	M8X1P	TPE312	L06	M3-M12	1.23
	TPG1024	56	75	M10X1P	TPE1024	L08	M10-M24	1.39
BT50-	TPG312	44	80	M8X1P	TPE312	L06	M3-M12	3.88
	TPG1024	56	80	M10X1P	TPE1024	L08	M10-M24	4.09

注：筒夾需單獨訂購。
Notice: Collets shall be ordered separately.

特點 / Feature

■適用于高精度同步數控加工。
■由主軸中心提供內冷却。
■爲達到高速攻絲的剛性設計。
■短型且緊凑的設計。

■For high precision tapping;
■With internal coolant hole;
■Design for high speed and rigid tapping;
■Short and compact design.

BT-TPM Tapping Chuck With High Rigidity
BT-TPM扭力伸縮攻牙刀柄



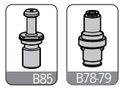

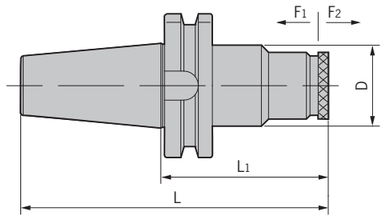

型號 Specification		D	F_1	F_2	L_1	L	適用筒夾 Suit collet	攻牙能力 Tapping capacity	重量 Weight
BT30-	TPM316	50	10	20	111.6	162	TPD316	M3-M16	0.75
	TPM830	66	10	25	148.6	199	TPD830	M8-M30	0.80
BT40-	TPM316	50	10	20	101	168	TPD316	M3-M16	1.56
	TPM830	66	10	25	141	208	TPD830	M8-M30	2.62
BT50-	TPM316	50	10	20	118	222.8	TPD316	M3-M16	4.24
	TPM830	66	10	25	130.2	235	TPD830	M8-M30	4.77

注：筒夾需單獨訂購。
Notice: Collets shall be ordered separately.

HPM

BT-HPM High Speed Milling Chuck
BT-HPM高速精密强力銑刀夾頭



MAX 30,000 min⁻¹

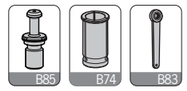

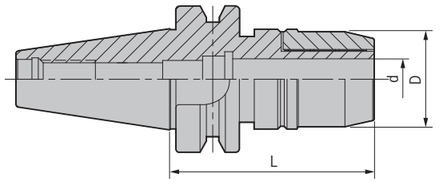

型號 Specification		範圍 Range	D	d	L	適用筒夾 Suit collet	重量 Weight
BT30-	HPM16-70	3-16	46	16	70	SC16	1.40
	HPM20-75	6-20	55	20	75	SC20	1.80
BT40-	HPM16-70	3-16	46	16	70	SC16	1.60
	HPM16-105	3-16	46	16	105	SC16	1.80
	HPM16-135	3-16	46	16	135	SC16	2.30
	HPM20-80	6-20	55	20	80	SC20	2.40
	HPM20-105	6-20	55	20	105	SC20	2.50
	HPM20-135	6-20	55	20	135	SC20	2.80
	HPM32-105	6-32	68	32	105	SC32	2.80
	HPM32-135	6-32	68	32	135	SC32	3.00
BT50-	HPM16-90	3-16	46	16	90	SC16	3.90
	HPM16-110	3-16	46	16	110	SC16	4.10
	HPM16-135	3-16	46	16	135	SC16	4.30
	HPM16-150	3-16	46	16	150	SC16	4.50
	HPM20-105	6-20	55	20	105	SC20	4.50
	HPM20-135	6-20	55	20	135	SC20	4.70
	HPM20-150	6-20	55	20	150	SC20	4.90
	HPM32-110	6-32	68	32	110	SC32	5.20
	HPM32-135	6-32	68	32	135	SC32	5.90
	HPM32-165	6-32	68	32	165	SC32	6.60

注：報價時含扳手，筒夾需單獨訂購。
Notice:Wrench is included,while collet is to be ordered separately.

特點 / Feature

■動平衡設定: G2.5； 20,000 rpm。
■3D處徑向跳動0.02 mm。

■Balanced: G2.5; 20,000 rpm;
■Runout (X3D): < 0.02 mm.

HPC

BT-HPC High-speed Milling Chuck
BT-HPC高速精密强力銑刀夾頭



MAX 30,000 min⁻¹

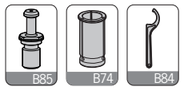

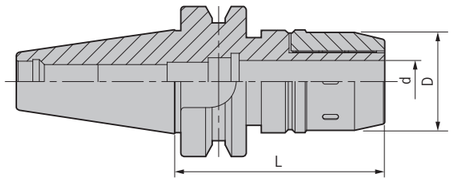

型號 Specification		範圍 Range	D	d	L	適用筒夾 Suit collet	重量 Weight
BT30-	HPC16-70	3-16	46	16	70	SC16	1.40
	HPC20-75	6-20	51.5	20	75	SC20	1.80
BT40-	HPC16-70	3-16	46	16	70	SC16	1.60
	HPC16-105	3-16	46	16	105	SC16	1.80
	HPC16-135	3-16	46	16	135	SC16	2.30
	HPC20-80	6-20	51.5	20	80	SC20	2.40
	HPC20-105	6-20	51.5	20	105	SC20	2.50
	HPC20-135	6-20	51.5	20	135	SC20	2.80
	HPC32-105	6-32	70.5	32	105	SC32	2.80
	HPC32-135	6-32	70.5	32	135	SC32	3.00
BT50-	HPC16-90	3-16	46	16	90	SC16	3.90
	HPC16-110	3-16	46	16	110	SC16	4.10
	HPC16-135	3-16	46	16	135	SC16	4.30
	HPC16-150	3-16	46	16	150	SC16	4.50
	HPC20-105	6-20	51.5	20	105	SC20	4.50
	HPC20-135	6-20	51.5	20	135	SC20	4.70
	HPC20-150	6-20	51.5	20	150	SC20	4.90
	HPC32-110	6-32	70.5	32	110	SC32	5.20
	HPC32-135	6-32	70.5	32	135	SC32	5.90
	HPC32-165	6-32	70.5	32	165	SC32	6.60

注：報價時含扳手，筒夾需單獨訂購。
Notice:Wrench is included,while collet is to be ordered separately.

特點 / Feature

■動平衡設定: G6.3；15,000 rpm。
■3D處徑向跳動0.02 mm。

■Balanced: G6.3; 15,000 rpm;
■Runout (X3D): < 0.02 mm.

MLC

BT-MLC Power Milling Chuck For Heavy Duty
BT-MLC强力筒夾本體



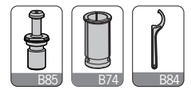

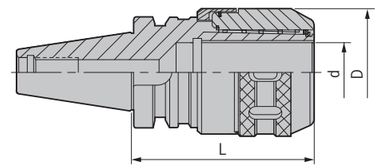

型號 Specification		範圍 Range	D	d	L	適用筒夾 Suit collet	重量 Weight
BT30-	MLC20-75	6-20	51.5	20	75	SC20	1.59
	MLC20-100	6-20	51.5	20	100	SC20	1.73
BT40-	MLC20-80	6-20	51.5	20	80	SC20	1.85
	MLC20-100	6-20	51.5	20	100	SC20	2.11
	MLC20-135	6-20	51.5	20	135	SC32	2.65
	MLC32-105	6-32	70.5	32	105	SC32	2.28
	MLC32-135	6-32	70.5	32	135	SC32	2.87
BT50-	MLC20-105	6-20	51.5	20	105	SC20	4.30
	MLC20-150	6-20	51.5	20	150	SC20	5.83
	MLC32-110	6-32	70.5	32	110	SC32	4.52
	MLC32-135	6-32	70.5	32	135	SC32	5.44
	MLC32-165	6-32	70.5	32	165	SC32	6.19
	MLC32-200	6-32	70.5	32	200	SC32	6.95
	MLC42-115	6-42	86	42	115	SC42	5.50
	MLC42-135	6-42	86	42	135	SC42	6.43
	MLC42-165	6-42	86	42	165	SC42	7.65

注：報價時含扳手，筒夾需單獨訂購。
Notice:Wrench is included,while collet shall be ordered separately.

特點 / Feature

■刀柄采用四組220根針狀滾針經特殊排列而成。
■端面鎖緊增强了本體鋼性强度。
■立銑刀無振動無滑移實現了最大能力範圍的重銑削加工，跳動精度0.02mm。
■The tool holder uses four special layers with 220 pieces bearing arranged in particular.
■ It can reduce the locking resistanced and also show best performance on heavy cutting.
■The usual length of power milling chuck show that the highest runout accuracy can reach to 0.02mm.

BT-MLC Power Chuck Kit
BT-MLC强力筒夾本體套裝組

型號 Specification		筒夾 Collet	數量 PCS/SET	重量 Weight
BT40-	MLC20-100-5PCS	SC20-6,8,10,12,16	5	7.30
	MLC32-105-7PCS	SC32-6,8,10,12,16,20,25	7	7.80
BT50-	MLC20-105-5PCS	SC20-6,8,10,12,16	5	7.50
	MLC32-110-7PCS	SC32-6,8,10,12,16,20,25	7	8.40
	MLC42-115-8PCS	SC42-6,8,10,12,16,20,25,32	8	11.40



SLN

BT-SLN Side-lock Holder
BT-SLN側固式刀柄



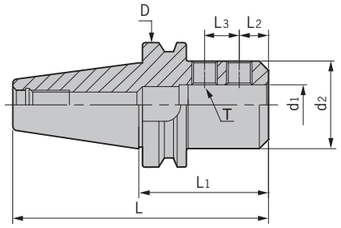

A

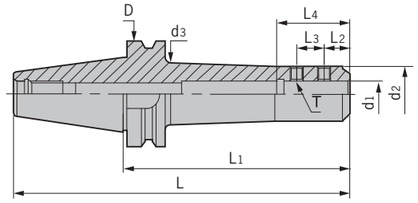

B

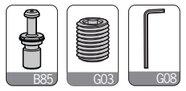

型號 Specification		圖示 Figure	D	d1	d2	d3	L1	L2	L3	L	側面壓緊螺釘 Side-lock screw	重量 Weight
BT30-	SLN6-60	A	46	6	25	-	60	18	-	108.4	M060U080	0.55
	SLN8-60	A	46	8	28	-	60	18	-	108.4	M080U100	0.60
	SLN10-60	A	46	10	35	-	60	20	-	108.4	M100U120	0.70
	SLN12-60	A	46	12	42	-	60	22.5	-	108.4	M120U140	0.75
	SLN16-75	A	46	16	48	-	75	24	-	123.4	M140U160	1.05
	SLN20-75	A	46	20	52	-	75	25	-	123.4	M160U160	1.10
	SLN25-90	A	46	25	65	-	90	24	25	138.4	M180Z180P	1.70
BT40-	SLN6-50	A	63	6	25	-	50	18	-	115.4	M060U080	1.10
	SLN6-100	A	63	6	25	-	100	12	10	165.4	M060U080	1.40
	SLN8-50	A	63	8	28	-	50	18	-	115.4	M080U100	1.10
	SLN8-100	A	63	8	28	-	100	14	12	165.4	M080U100	1.42
	SLN10-63	A	63	10	35	-	63	20	-	128.4	M100U100	1.25
	SLN10-100	A	63	10	35	-	100	15	14	165.4	M100U120	1.45
	SLN12-63	A	63	12	42	-	63	22.5	-	128.4	M120U140	1.26
	SLN12-100	A	63	12	42	-	100	20	16	165.4	M120U140	1.50
	SLN16-63	A	63	16	48	-	63	24	-	128.4	M140U160	1.31
	SLN16-100	A	63	16	48	-	100	22	18	165.4	M140U160	1.52
	SLN20-63	A	63	20	52	-	63	25	-	128.4	M160U160	1.33
	SLN20-100	A	63	20	52	-	100	25	20	165.4	M160U160	1.60
	SLN25-100	A	63	25	65	-	100	24	25	165.4	M180Z180P	2.32
	SLN32-100	A	63	32	72	-	100	24	28	165.4	M200Z180P	3.80

轉下頁
See next page

SLN
BT-SLN Side-lock Holder
BT-SLN側固式刀柄

型號 Specification		圖示 Figure	D	d1	d2	d3	L1	L2	L3	L	側面壓緊螺釘 Side-lock screw	重量 Weight
BT50-	SLN6-63	A	100	6	25	-	63	18	-	164.8	M060U080	3.80
	SLN6-100	A	100	6	25	-	100	12	10	201.8	M060U080	4.20
	SLN8-63	A	100	8	28	-	63	18	-	164.8	M080U100	3.80
	SLN8-100	A	100	8	28	-	100	14	12	201.8	M080U100	4.22
	SLN10-63	A	100	10	35	-	63	18	-	164.8	M100U100	3.80
	SLN10-100	A	100	10	35	-	100	15	14	201.8	M100U120	4.25
	SLN12-80	A	100	12	42	-	80	22.5	-	181.8	M120U140	3.99
	SLN12-125	A	100	12	42	-	125	20	16	226.8	M120U140	5.00
	SLN16-80	A	100	16	48	-	80	24	-	181.8	M140U160	4.03
	SLN16-125	A	100	16	48	-	125	22	18	226.8	M140U160	5.20
	SLN16-165L	B	100	16	48	53	165	22	18	266.8	M140U160	6.30
	SLN20-80	A	100	20	52	-	80	25	-	181.8	M160U160	4.03
	SLN20-125	A	100	20	52	-	125	25	20	226.8	M160U160	5.30
	SLN20-165L	B	100	20	52	57	165	25	20	266.8	M160U160	6.35
	SLN20-210L	B	100	20	52	59	210	25	20	316.8	M160U160	7.25
	SLN25-100	A	100	25	65	-	100	24	25	201.8	M180Z180P	4.62
	SLN25-165L	B	100	25	65	70	165	24	25	266.8	M180Z180P	6.63
	SLN25-210L	B	100	25	65	70	210	24	25	311.8	M180Z180P	7.30
	SLN32-105	A	100	32	72	-	105	24	28	206.8	M200Z180P	4.80
	SLN32-165L	B	100	32	72	77	165	24	28	266.8	M200Z180P	6.70
	SLN32-210L	B	100	32	72	77	210	24	28	311.8	M200Z180P	7.50
	SLN40-115	A	100	40	90	-	115	30	32	216.8	M200Z180P	5.42
	SLN42-120	A	100	42	90	-	120	30	32	221.8	M200Z180P	6.14
	SLN42-210L	B	100	42	90	95	210	30	32	311.8	M200Z180P	7.23
	SLN50-120	A	100	50	90	-	120	35	35	221.8	M200Z180P	5.65
	SLN50.8-120	A	100	50.8	90	-	120	33	34.54	221.8	M200Z180P	5.58

注：扳手需單獨訂購。
Notice: Wrenchs shall be ordered separately.

MTA

BT-MTA Morse Taper Holder
BT-MTA莫氏錐套刀柄（鑽頭套筒）



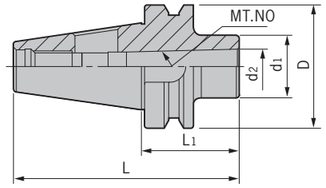



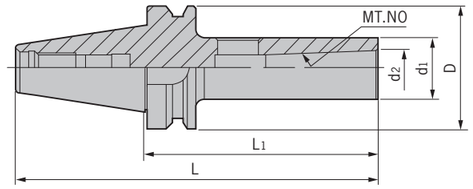

型號 Specification		莫氏錐度 MT.NO	D	d_1	d_2	L_1	L	重量 Weight
BT30-	MTA1-45	1	46	25	12.065	45	93.4	0.55
	MTA1-105	1	46	25	12.065	105	153.4	0.80
	MTA2-60	2	46	32	17.780	60	108.4	0.60
	MTA2-120	2	46	32	17.780	120	168.4	0.90
	MTA3-80	3	46	40	23.825	80	128.4	0.80
BT40-	MTA1-45	1	63	25	12.065	45	110.4	1.05
	MTA1-120	1	63	25	12.065	120	185.4	1.28
	MTA2-50	2	63	32	17.780	50	115.4	1.00
	MTA2-120	2	63	32	17.780	120	185.4	1.41
	MTA3-70	3	63	40	23.825	70	135.4	1.13
	MTA3-135	3	63	40	23.825	135	200.4	1.75
	MTA4-95	4	63	48	31.267	95	160.4	1.35
	MTA4-165	4	63	48	31.267	165	230.4	2.30
BT50-	MTA1-45	1	100	25	12.065	45	146.8	3.59
	MTA1-120	1	100	25	12.065	120	221.8	3.88
	MTA1-180	1	100	25	12.065	180	281.8	4.12
	MTA2-60	2	100	32	17.780	60	161.8	3.64
	MTA2-135	2	100	32	17.780	135	236.8	4.17
	MTA2-180	2	100	32	17.780	180	281.8	4.39
	MTA3-65	3	100	40	23.825	65	166.8	3.60
	MTA3-150	3	100	40	23.825	150	251.8	4.40
	MTA3-180	3	100	40	23.825	180	281.8	4.73
	MTA4-95	4	100	48	31.267	95	196.8	3.88
	MTA4-180	4	100	48	31.267	180	281.8	5.00
	MTA5-105	5	100	63	44.399	105	206.8	3.74

MTB/SPU

BT-MTB Morse Taper Holder
BT-MTB莫氏錐套刀柄（螺絲鎖緊）





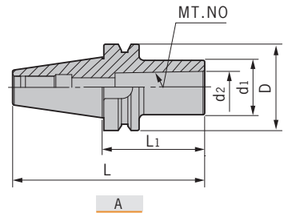

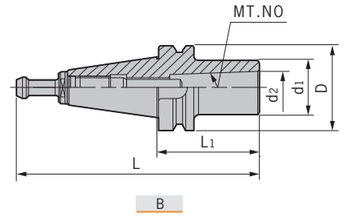

型號 Specification		莫氏錐度 MT.NO	圖示 Figure	D	d_1	d_2	L_1	L	拉緊螺釘 Tension screw	範圍 Range	重量 Weight
BT30-	MTB1-45	1	A	46	25	12.065	45	93.4	E060U160	Φ10-Φ14	0.55
	MTB2-60	2	B	46	32	17.780	60	108.4	BT30-45-MT2	Φ16-Φ22	0.60
BT40-	MTB1-45	1	A	63	25	12.065	45	110.4	E060U160	Φ10-Φ14	1.00
	MTB2-50	2	A	63	32	17.780	50	115.4	E100U300-MTB	Φ16-Φ22	1.02
	MTB3-75	3	B	63	40	23.825	75	140.4	BT40-45-MT3	Φ24-Φ32	1.19
	MTB4-90	4	B	63	48	31.267	90	155.4	BT40-45-MT4	Φ32-Φ50	1.33
BT50-	MTB1-45	1	A	100	25	12.065	45	146.8	E060U250	Φ10-Φ14	3.30
	MTB2-45	2	A	100	32	17.780	45	151.8	E100U350	Φ16-Φ22	3.57
	MTB3-60	3	A	100	40	23.825	60	161.8	E120U400	Φ24-Φ32	3.61
	MTB4-75	4	A	100	50	31.267	75	176.8	E160U400-MTB	Φ32-Φ50	3.68
	MTB5-120	5	B	100	70	44.399	120	221.8	BT50-45-MT5	Φ55-Φ60	4.10

注：報價時含拉緊拉釘。
Notice:Tension screw is included.

BT-SPU Drill Chuck Holder
BT-SPU直結式鑽夾頭刀柄



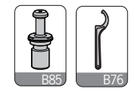

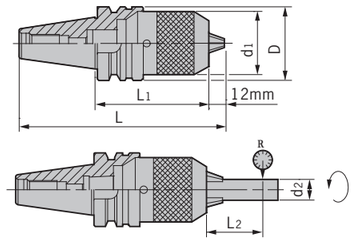

型號 Specification		D	d_1	d_2	L_1	L_2	L	偏擺精度 R	夾持範圍 Range	重量 Weight
BT30-	SPU8-80	46	37	8	80	55	137.4	0.04	0-8	0.72
	SPU13-110	46	50	13	110	75	170.4	0.04	0.3-13	1.62
	SPU16-120	46	57	16	120	80	180.4	0.04	3-16	1.70
BT40-	SPU8-85	63	37	8	85	55	159.4	0.04	0-8	1.36
	SPU13-100	63	50	13	100	75	177.4	0.04	0.3-13	1.76
	SPU13-130	63	50	13	130	75	207.4	0.04	0.3-13	2.47
	SPU16-105	63	57	16	105	80	187.4	0.04	3-16	2.18
BT50-	SPU8-90	100	37	8	90	55	200.4	0.04	0-8	4.32
	SPU13-100	100	50	13	100	75	213.4	0.04	0.3-13	4.98
	SPU13-130	100	50	13	130	75	243.4	0.04	0.3-13	5.50
	SPU13-180	100	50	13	180	75	293.4	0.04	0.3-13	6.06
	SPU16-105	100	57	16	105	80	223.4	0.04	3-16	4.78
	SPU16-130	100	57	16	130	80	248.4	0.04	3-16	5.24
	SPU16-190	100	57	16	190	80	308.8	0.04	3-16	6.66

注：報價時含扳手。
Notice:Wrench is included.

FMA

BT-FMA Face Mill Holder
BT-FMA平面銑刀柄（直柄式）



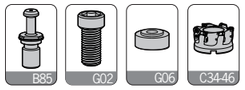

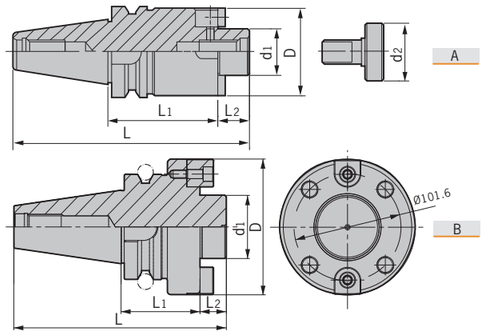

型號 Specification		圖示 Figure	D	d1	d2	L1	L2	L	刀盤鎖緊螺釘 Locking screw for cutter	墊圈 Washer	重量 Weight
BT30-	FMA25.4-45	A	50	25.40	31.5	45	20	113.4	E120U300	-	1.10
	FMA25.4-60	A	50	25.40	31.5	60	20	128.4	E120U300	-	1.30
	FMA31.75-45	A	60	31.75	40	45	22	115.4	E160U350	-	1.35
BT40-	FMA25.4-45	A	50	25.40	31.5	45	20	130.4	E120U300	-	1.54
	FMA25.4-60	A	50	25.40	31.5	60	20	145.4	E120U300	-	1.77
	FMA25.4-90	A	50	25.40	31.5	90	20	175.4	E120U300	-	2.23
	FMA25.4-105	A	50	25.40	31.5	105	20	190.4	E120U300	-	2.47
	FMA31.75-45	A	60	31.75	40	45	22	132.4	E160U350	FM-2	1.65
	FMA31.75-75	A	60	31.75	40	75	22	162.4	E160U350	FM-2	2.31
	FMA31.75-90	A	60	31.75	40	90	22	177.4	E160U350	FM-2	2.64
	FMA38.10-60	A	75	38.10	50	60	25	150.4	E160U350	FM-3	2.36
	FMA50.80-60	A	95	50.80	65	60	36	161.4	E160U350	-	3.50
BT50-	FMA25.4-45	A	50	25.40	31.5	45	20	166.8	E120U300	-	3.87
	FMA25.4-90	A	50	25.40	31.5	90	20	211.8	E120U300	-	4.54
	FMA25.4-150	A	50	25.40	31.5	150	20	271.8	E120U300	-	5.47
	FMA31.75-45	A	60	31.75	40	45	22	168.8	E160Z350-40	-	4.04
	FMA31.75-75	A	60	31.75	40	75	22	198.8	E160Z350-40	-	4.72
	FMA31.75-105	A	98	31.75	40	105	22	228.8	E160Z350-40	-	7.19
	FMA38.10-45	A	80	38.10	50	45	25	171.8	E160Z350-50	-	4.27
	FMA38.10-75	A	80	38.10	50	75	25	201.8	E160Z350-50	-	5.48
	FMA50.80-45	A	95	50.80	65	45	36	182.8	E240Z350-65	-	4.74
	FMA50.80-75	A	95	50.80	65	75	36	212.8	E240Z350-65	-	6.35
	FMA47.625F-75	B	128.75	47.625	-	75	32	208.8	E160U500	-	7.60

FMB

BT-FMB Face Mill Holder
BT-FMB平面銑刀柄（直柄式）



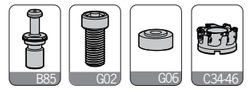

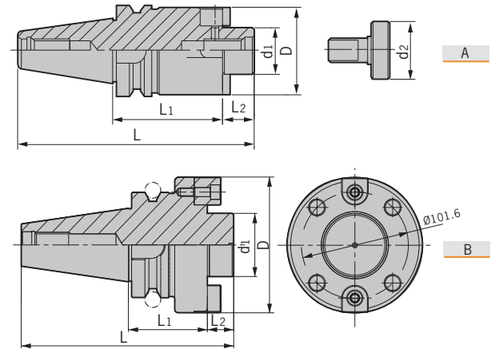

型號 Specification		圖示 Figure	D	d1	d2	L1	L2	L	刀盤鎖緊螺釘 Locking screw for cutter	墊圈 Washer	重量 Weight
BT30-	FMB22-45	A	48	22	16	45	18	111.4	E100U300	-	0.85
	FMB22-60	A	48	22	16	60	18	126.4	E100U300	-	1.25
	FMB27-45	A	60	27	33	45	20	113.4	E120U300	FM-1	1.20
	FMB27-60	A	60	27	33	60	20	128.4	E120U300	FM-1	1.35
	FMB32-45	A	78	32	40	45	22	115.4	E160U350	-	1.35
BT40-	FMB22-45	A	48	22	16	45	18	128.4	E100U300	-	1.31
	FMB22-60	A	48	22	16	60	18	143.4	E100U300	-	1.51
	FMB22-90	A	48	22	16	90	18	173.4	E100U300	-	1.94
	FMB22-150	A	48	22	16	150	18	233.4	E100U300	-	2.70
	FMB22-200	A	48	22	16	200	18	283.4	E100U300	-	3.43
	FMB27-45	A	60	27	33	45	20	130.4	E120U300	FM-1	1.52
	FMB27-60	A	60	27	33	60	20	145.4	E120U300	FM-1	1.86
	FMB27-90	A	60	27	33	90	20	175.4	E120U300	FM-1	2.51
	FMB27-105	A	60	27	33	105	20	190.4	E120U300	FM-1	2.86
	FMB32-45	A	78	32	40	45	22	132.4	E160U350	FM-2	1.87
	FMB32-60	A	78	32	40	60	22	147.4	E160U350	FM-2	2.32
	FMB40-60	A	85	40	50	60	25	150.4	E200U350	FM-3	2.47
BT50-	FMB22-45	A	48	22	16	45	18	164.8	E100U300	-	3.79
	FMB22-90	A	48	22	16	90	18	209.8	E100U300	-	4.53
	FMB22-150	A	48	22	16	150	18	269.8	E100U300	-	5.27
	FMB22-200	A	48	22	16	200	18	319.8	E100U300	-	5.97
	FMB22-250	A	48	22	16	250	18	369.8	E100U300	-	6.69
	FMB22-300	A	48	22	16	300	18	419.8	E100U300	-	7.42
	FMB22-350	A	48	22	16	350	18	469.8	E100U300	-	8.13
	FMB22-400	A	48	22	16	400	18	519.8	E100U300	-	8.83
	FMB27-50	A	60	27	33	50	20	171.8	E120U300	FM-1	4.04
	FMB27-90	A	60	27	33	90	20	211.8	E120U300	FM-1	4.94
	FMB27-150	A	60	27	33	150	20	271.8	E120U300	FM-1	6.25
	FMB27-200	A	60	27	33	200	20	321.8	E120U300	FM-1	7.37
	FMB27-250	A	60	27	33	250	20	371.8	E120U300	FM-1	8.51
	FMB32-50	A	78	32	40	50	22	173.8	E160Z350-40	-	4.40
	FMB32-90	A	78	32	40	90	22	213.8	E160Z350-40	-	5.79
	FMB32-150	A	78	32	40	150	22	273.8	E160Z350-40	-	7.10
	FMB40-50	A	85	40	50	50	25	176.8	E200Z350-50	-	4.57
	FMB40-90	A	85	40	50	90	25	216.8	E200Z350-50	-	6.45
	FMB40-105	A	85	40	50	105	25	231.8	E200Z350-50	-	7.02
	FMB60F-75	B	140	60	-	75	25	201.8	E160U500	-	8.00

FMA/FMB

BT-FMA-BG Face Mill Holder With Extra Taper Shank
BT-FMA-BG平面銑刀柄（加長斜度柄）



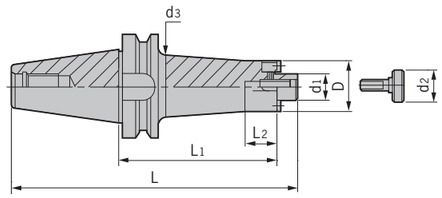

型號 Specification		D	d1	d2	d3	L1	L2	L	刀盤鎖緊螺釘 Locking screw for cutter	重量 Weight
BT50-	FMA25.4-125BG	48	25.4	31.5	60	125	30	246.8	E120U300	5.60
	FMA25.4-150BG	48	25.4	31.5	60	150	30	271.8	E120U300	6.20
	FMA25.4-200BG	58	25.4	31.5	62.5	200	30	321.8	E120U300	7.50
	FMA25.4-250BG	58	25.4	31.5	62.5	250	30	371.8	E120U300	8.40
	FMA25.4-300BG	58	25.4	31.5	62.5	300	30	421.8	E120U300	9.40
	FMA25.4-350BG	58	25.4	31.5	62.5	350	30	471.8	E120U300	9.70
	FMA25.4-400BG	58	25.4	31.5	62.5	400	30	521.8	E120U300	10.50
	FMA31.75-125BG	70	31.75	40	75	125	30	248.8	E160Z500-40	5.60
	FMA31.75-150BG	70	31.75	40	75	150	30	273.8	E160Z500-40	6.30
	FMA31.75-175BG	70	31.75	40	75	175	30	298.8	E160Z500-40	8.30
	FMA31.75-200BG	70	31.75	40	75	200	30	323.8	E160Z500-40	9.10
	FMA31.75-250BG	70	31.75	40	75	250	30	373.8	E160Z500-40	10.60
	FMA31.75-300BG	70	31.75	40	75	300	30	423.8	E160Z500-40	12.10
	FMA31.75-350BG	70	31.75	40	75	350	30	473.8	E160Z500-40	13.60

BT-FMB-BG Face Mill Holder With Extra Taper Shank
BT-FMB-BG平面銑刀柄（加長斜度柄）



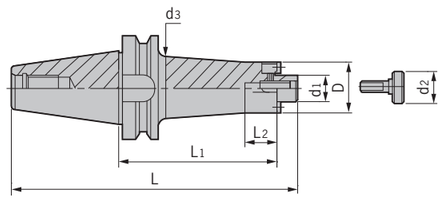

型號 Specification		D	d1	d2	d3	L1	L2	L	刀盤鎖緊螺釘 Locking screw for cutter	重量 Weight
BT40-	FMB22-150BG	48	22	16	50	150	30	233.4	E100U300	2.83
	FMB22-200BG	48	22	16	50	200	30	283.4	E100U300	3.57
	FMB22-250BG	48	22	16	50	250	30	333.4	E100U300	4.29
	FMB22-300BG	48	22	16	50	300	30	383.4	E100U300	5.04
	FMB22-350BG	48	22	16	50	350	30	433.4	E100U300	5.79
	FMB22-400BG	48	22	16	50	400	30	483.4	E100U300	6.58
BT50-	FMB22-150BG	58	22	16	62.5	150	58	269.8	E100U300	6.17
	FMB22-200BG	58	22	16	62.5	200	58	319.8	E100U300	7.28
	FMB22-250BG	58	22	16	62.5	250	58	369.8	E100U300	8.41
	FMB22-300BG	58	22	16	62.5	300	58	419.8	E100U300	9.55
	FMB22-350BG	58	22	16	62.5	350	78	469.8	E100U300	10.72
	FMB22-400BG	58	22	16	62.5	400	78	519.8	E100U300	11.92
	FMB22-450BG	58	22	16	62.5	450	78	569.8	E100U300	13.20
	FMB22-500BG	58	22	16	62.5	500	78	619.8	E100U300	14.36

SLO/CSO/PB

BT-SLO Oil-feed Holder
BT-SLO油路刀柄



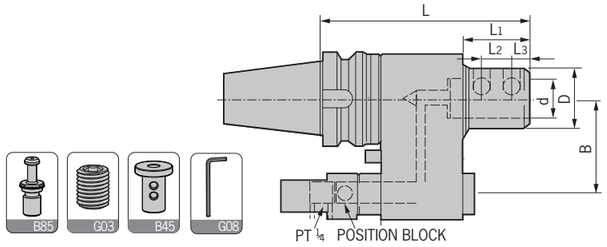

型號 Specification		D	d	L1	L2	L3	L	B	側面壓緊螺釘 Side-lock screw	扳手 Wrench	重量 Weight
BT40-	SL032-150	72	32	50	15	15	150	60/65	M120U200	L06D	5.33/5.35
	SL040-150	72	40	50	18	19	150	60/65	M140U160	L08D	5.04/5.07
BT50-	SL032-160	72	32	50	15	15	160	80/82	M120U200	L06D	8.63/8.65
	SL040-160	72	40	50	18	19	160	80/82	M140U160	L08D	8.33/8.35

注：報價時含扳手，請于訂購時，依據機臺規格確認中心距離B的尺寸。
Notice:1.Wrench is included;　2.Before order please check the distance B.

CSO Reducing Sleeve
CSO油路刀套



型號 Specification		D	d	d1	L1	L2	L3	L	重量 Weight
CSO	32-16	53	32	16	10	15	15	65	0.40
	32-20	53	32	20	10	15	15	65	0.35
	32-25	53	32	25	10	15	15	65	0.26
	40-16	63	40	16	10	18	19	75	0.74
	40-20	63	40	20	10	18	19	75	0.68
	40-25	63	40	25	10	18	19	75	0.59
	40-32	63	40	32	10	18	19	75	0.41

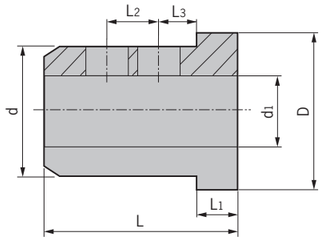

PB Oil-feed Holder Positioning Block
PB油路止動塊



型號 Specification	重量 Weight
BT40-PB30-35	0.53
BT50-PB30-35	0.46

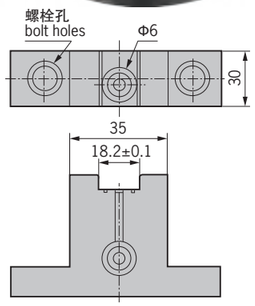

注意：在使用油路刀柄時，止動塊是必需的配套附件。
止動塊可安裝到ATC等機器上。因此，隨着越來越多的不同型號的機器，有必要與機械制造商協商正確安裝。
Notice:Using oil-feed holder, positioning block illustrated here is necessary.
This positioning block can be mounted to different machines. As the mounting differs with different machines, it is necessary to consult the machine manufacturer about the proper mounting.

DHP

SK-DHP Hydraulic Chuck
SK-DHP 液壓刀柄

NEW



MAX 30,000 min⁻¹

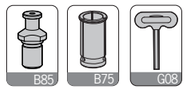

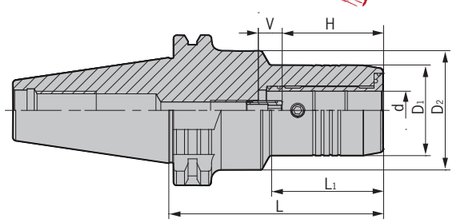

型號 Specification		d	D1	D2	L1	L	H	V	T	適用筒夾 Suit collet	扳手 Wrench	重量 Weight
SK30-	DHP6-65	6	28	50	23	65	27.5	10	M5X0.8	-	T04	1.26
	DHP6-80.5	6	28	50	44	80.5	27.5	10	M5X0.8	-	T04	1.35
	DHP6-110	6	28	50	44	110	27.5	10	M5X0.8	-	T04	1.77
	DHP8-65	8	30	50	23	65	27.5	10	M6X1.0	-	T04	1.26
	DHP8-80.5	8	30	50	44	80.5	27.5	10	M6X1.0	-	T04	1.38
	DHP8-110	8	30	50	44	110	27.5	10	M6X1.0	-	T04	1.84
	DHP10-65	10	32	50	23	65	32.5	10	M6X1.0	-	T04	1.28
	DHP10-80.5	10	32	50	44	80.5	32.5	10	M6X1.0	-	T04	1.40
SK40-	DHP10-110	10	32	50	44	110	32.5	10	M6X1.0	-	T04	1.95
	DHP12-65	12	34	50	23	65	37.5	10	M6X1.0	D12/OD12	T04	1.28
	DHP12-80.5	12	34	50	44	80.5	37.5	10	M6X1.0	D12/OD12	T04	1.45
	DHP12-110	12	34	50	44	110	37.5	10	M6X1.0	D12/OD12	T04	2.00
	DHP14-75	14	36	50	30	75	37.5	10	M6X1.0	-	T04	1.40
	DHP14-80.5	14	36	50	44	80.5	37.5	10	M6X1.0	-	T04	1.49
	DHP14-110	14	36	50	44	110	37.5	10	M6X1.0	-	T04	2.02
	DHP16-75	16	38	50	30	75	42.5	10	M8X1.0	-	T04	1.44
	DHP16-80.5	16	38	50	48	80.5	42.5	10	M8X1.0	-	T04	1.55
	DHP16-110	16	38	50	48	110	42.5	10	M8X1.0	-	T04	2.21
	DHP18-75	18	41	50	30	75	42.5	10	M8X1.0	-	T04	1.48
	DHP18-80.5	18	41	50	48	80.5	42.5	10	M8X1.0	-	T04	1.58
	DHP18-135	18	41	50	48	110	42.5	10	M8X1.0	-	T04	2.65
	DHP20-75	20	43	50	30	75	42.5	10	M8X1.0	D20/OD20	T04	1.40
	DHP20-80.5	20	43	50	48	80.5	42.5	10	M8X1.0	D20/OD20	T04	1.65
	DHP20-135	20	43	50	48	135	42.5	10	M8X1.0	D20/OD20	T04	2.70
	DHP25-80.5	25	57	66	26	80.5	51	10	M16X1.0	-	T05	2.00
	DHP32-80.5	32	63	80	26	80.5	55	10	M16X1.0	D32/OD32	T05	2.20

轉下頁
See next page

DHP

SK-DHP Hydraulic Chuck
SK-DHP 液壓刀柄

NEW



MAX 30,000 min⁻¹

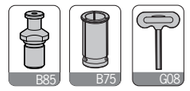

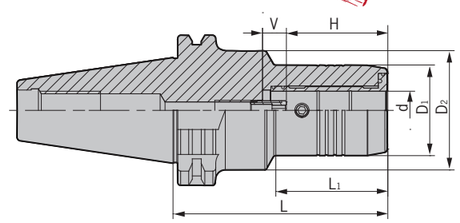

型號 Specification		d	D1	D2	L1	L	H	V	T	適用筒夾 Suit collet	扳手 Wrench	重量 Weight
SK50-	DHP6-90	6	28	50	44	90	27.5	10	M5X0.8	-	T04	4.03
	DHP6-140	6	28	50	44	140	27.5	10	M5X0.8	-	T04	4.65
	DHP8-90	8	30	50	44	90	27.5	10	M6X1.0	-	T04	4.06
	DHP8-140	8	30	50	44	140	27.5	10	M6X1.0	-	T04	4.68
	DHP10-90	10	32	50	44	90	32.5	10	M6X1.0	-	T04	4.08
	DHP10-140	10	32	50	44	140	32.5	10	M6X1.0	-	T04	4.71
	DHP12-90	12	34	50	44	90	37.5	10	M6X1.0	D12/OD12	T04	4.09
	DHP12-140	12	34	50	44	140	37.5	10	M6X1.0	D12/OD12	T04	4.73
	DHP14-90	14	36	50	47	90	37.5	10	M6X1.0	-	T04	4.10
	DHP14-140	14	36	50	47	140	37.5	10	M6X1.0	-	T04	4.75
	DHP16-90	16	38	50	48	90	42.5	10	M8X1.0	-	T04	4.12
	DHP16-140	16	38	50	48	140	42.5	10	M8X1.0	-	T04	4.81
	DHP18-90	18	41	50	48	90	42.5	10	M8X1.0	-	T04	4.14
	DHP18-140	18	41	50	48	140	42.5	10	M8X1.0	-	T04	4.85
	DHP20-80.5	20	43	50	44	80.5	42.5	10	M8X1.0	D20/OD20	T04	4.11
	DHP20-90	20	43	50	48	90	42.5	10	M8X1.0	D20/OD20	T04	4.35
	DHP20-110	20	43	50	48	110	42.5	10	M8X1.0	D20/OD20	T04	4.65
	DHP20-140	20	43	50	48	140	42.5	10	M8X1.0	D20/OD20	T04	4.95
	DHP25-105	25	57	-	85.9	105	51	10	M16X1.0	-	T05	4.60
	DHP25-140	25	57	-	120.9	140	51	10	M16X1.0	-	T05	5.40
	DHP32-115	32	63	-	95.9	115	55	10	M16X1.0	D32/OD32	T05	4.85
	DHP32-140	32	63	-	120.9	140	55	10	M16X1.0	D32/OD32	T05	5.67

注：報價含扳手，筒夾需單獨訂購。
Notice:Wrench is included, while collet shall be ordered separately.

特點 / Feature

■DHP刀具系列用途高轉速、高精密切削加工，切削效果佳。
■動平衡設定: G2.5; 20,000 rpm。
■3D處徑向跳動0.003 mm。

■For high-speed and high precision cutting;
■Balanced: G2.5; 20,000 rpm;
■Runout (X3D): < 0.003 mm.

SF

SK-SF Shrink Fit Holder
SK-SF燒結式熱裝刀柄（一體式）



MAX 50,000 min⁻¹



NEW

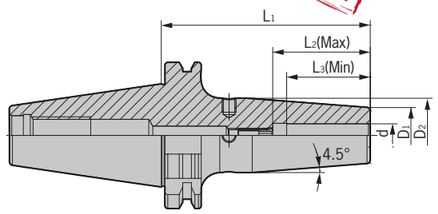

型號 Specification		d	D1	D2	L1	L2 (Max)	L3 (Min)	重量 Weight
SK30-	SF3-80	3	10	10	80	-	9	0.35
	SF4-80	4	10	10	80	-	12	0.40
	SF5-80	5	10	10	80	-	15	0.43
	SF6-80	6	21	27	80	28	18	0.45
	SF8-80	8	21	27	80	34	24	0.50
	SF10-80	10	24	32	80	40	30	0.55
	SF12-80	12	24	32	80	40	30	0.62
	SF14-80	14	27	34	80	42	32	0.65
	SF16-80	16	27	34	80	42	32	0.68
	SF18-80	18	33	42	80	50	40	0.71
	SF20-90	20	33	42	90	50	40	0.75
SK40-	SF3-90	3	10	10	90	-	9	1.00
	SF4-90	4	10	10	90	-	12	1.10
	SF5-90	5	10	10	90	-	15	1.00
	SF6-90	6	21	27	90	28	18	1.15
	SF6-130	6	21	27	130	28	18	1.20
	SF6-160	6	21	27	160	28	18	1.40
	SF6-200	6	21	27	200	28	18	1.90
	SF8-90	8	21	27	90	34	24	1.15
	SF8-130	8	21	27	130	34	24	1.30
	SF8-160	8	21	27	160	34	24	1.50
	SF8-200	8	21	27	200	34	24	1.90
	SF10-90	10	24	32	90	40	30	1.20
	SF10-130	10	24	32	130	40	30	1.50
	SF10-160	10	24	32	160	40	30	1.80
	SF10-200	10	24	32	200	40	30	1.90
	SF12-90	12	24	32	90	40	30	1.30
	SF12-130	12	24	32	130	40	30	1.60
	SF12-160	12	24	32	160	40	30	1.80
	SF12-200	12	24	32	200	40	30	2.00
	SF14-90	14	27	34	90	42	32	1.30
	SF14-130	14	27	34	130	42	32	1.60
	SF14-160	14	27	34	160	42	32	1.80
	SF14-200	14	27	34	200	42	32	2.00
	SF16-90	16	27	34	90	42	32	1.40
	SF16-130	16	27	34	130	42	32	1.70
	SF16-160	16	27	34	160	42	32	1.95
	SF16-200	16	27	34	200	42	32	2.20

轉下頁
See next page

SF
SK-SF Shrink Fit Holder
SK-SF燒結式熱裝刀柄（一體式）

型號 Specification		d	D1	D2	L1	L2 (Max)	L3 (Min)	重量 Weight
SK40-	SF18-90	18	33	42	90	50	40	1.50
	SF18-130	18	33	42	130	50	40	1.80
	SF18-160	18	33	42	160	50	40	2.00
	SF18-200	18	33	42	200	50	40	2.30
	SF20-90	20	33	42	90	50	40	1.55
	SF20-130	20	33	42	130	50	40	1.85
	SF20-160	20	33	42	160	50	40	2.05
	SF20-200	20	33	42	200	50	40	2.35
	SF25-100	25	44	53	100	55	45	1.65
	SF25-130	25	44	53	130	55	45	1.90
	SF25-160	25	44	53	160	55	45	2.20
	SF25-200	25	44	53	200	55	45	2.50
	SF32-100	32	44	53	100	60	50	2.00
	SF32-130	32	44	53	130	60	50	2.30
	SF32-160	32	44	53	160	60	50	2.60
SK50-	SF6-100	6	21	27	100	28	18	3.70
	SF6-130	6	21	27	130	28	18	3.80
	SF6-160	6	21	27	160	28	18	3.88
	SF6-200	6	21	27	200	28	18	4.00
	SF8-100	8	21	27	100	34	24	3.60
	SF8-130	8	21	27	130	34	24	3.70
	SF8-160	8	21	27	160	34	24	3.90
	SF8-200	8	21	27	200	34	24	4.00
	SF10-100	10	24	32	100	40	30	3.65
	SF10-130	10	24	32	130	40	30	3.78
	SF10-160	10	24	32	160	40	30	4.00
	SF10-200	10	24	32	200	40	30	4.15
	SF12-100	12	24	32	100	40	30	3.70
	SF12-130	12	24	32	130	40	30	3.80
	SF12-160	12	24	32	160	40	30	4.10
	SF12-200	12	24	32	200	40	30	4.25
	SF14-100	14	27	34	100	42	32	3.70
	SF14-130	14	27	34	130	42	32	3.80
	SF14-160	14	27	34	160	42	32	4.10
	SF14-200	14	27	34	200	42	32	4.25
	SF16-100	16	27	34	100	42	32	3.75
	SF16-130	16	27	34	130	42	32	3.88
	SF16-160	16	27	34	160	42	32	4.20
	SF16-200	16	27	34	200	42	32	4.50
	SF18-100	18	33	42	100	50	40	3.75
	SF18-130	18	33	42	130	50	40	3.88
	SF18-160	18	33	42	160	50	40	4.20
	SF18-200	18	33	42	200	50	40	4.50

轉下頁
See next page

加工中心刀柄 TOOL HOLDERS
HSK刀柄 HSK holder
BT刀柄 BT holder
SK刀柄 SK holder
ISO刀柄 ISO holder
刀柄配件 Holder accessories

SF/DSF

SK-SF Shrink Fit Holder
SK-SF燒結式熱裝刀柄（一體式）



MAX 50,000 min⁻¹



NEW

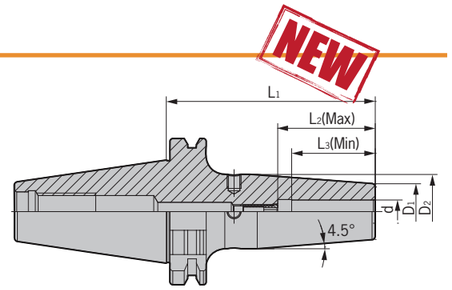

型號 Specification		d	D1	D2	L1	L2 (Max)	L3 (Min)	重量 Weight
SK50-	SF20-100	20	33	42	100	50	40	3.80
	SF20-130	20	33	42	130	50	40	4.00
	SF20-160	20	33	42	160	50	40	4.30
	SF20-200	20	33	42	200	50	40	4.60
	SF25-100	25	44	53	100	55	45	3.82
	SF25-130	25	44	53	130	55	45	4.05
	SF25-160	25	44	53	160	55	45	4.33
	SF25-200	25	44	53	200	55	45	4.65
	SF32-100	32	44	53	100	60	50	4.00
	SF32-130	32	44	53	130	60	50	4.40
	SF32-160	32	44	53	160	60	50	4.70
	SF32-200	32	44	53	200	60	50	5.00

特 點 / Feature

■動平衡設定: G2.5; 25,000 rpm。
■3D處徑向跳動0.003 mm。
■Balanced: G2.5; 25,000 rpm;
■Runout (X3D): < 0.003 mm.

SK-DSF Shrink Fit Holder
SK-DSF燒結式熱裝刀柄（分體式）



MAX 50,000 min⁻¹

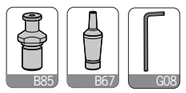

NEW

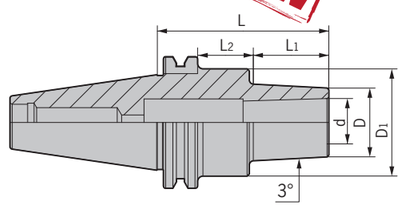

型號 Specification		D	D1	d	L1	L2	L	L型扳手 Wrench	重量 Weight
SK40-	DSF12-45	38	-	12	18	-	50	L06	1.10
	DSF12-75	38	-	12	48	-	75	L06	1.40
	DSF12-135	41	-	12	108	-	135	L06	2.20
SK50-	DSF12-75	38	65	12	25	21	75	L06	4.00
	DSF12-105	41	65	12	55	21	105	L06	4.40
	DSF12-135	41	65	12	85	21	135	L06	4.70

注：報價時含扳手。
Notice:Wrench is included.

特 點 / Feature

■動平衡設定: G2.5; 25,000 rpm。
■3D處徑向跳動0.003 mm。
■Balanced: G2.5; 25,000 rpm;
■Runout (X3D): < 0.003 mm.

DC

SK-DC Precision Slim Collet Chuck
SK-DC小徑精密夾頭本體



MAX 50,000 min⁻¹

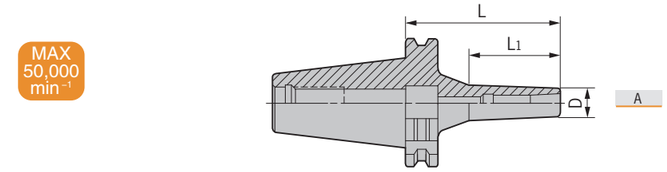

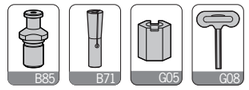

型號 Specification		圖示 Figure	D	L1	L	適用筒夾 Suit collet	拉緊螺釘 Tension screw	止動螺母 Stop nut	扳手 Wrench	重量 Weight
SK40-	DC6-90	A	13	45	90	DC6	E050U450	ZD6-2	T04-L	1.05
	DC8-90	A	22	53	90	DC8	E060U600	ZD8-1	T05-L	1.10
	DC10-90	B	28	74	90	DC10	E080U300	ZD10-2	T06-L	1.20
	DC12-90	B	34	74	90	DC12	E100U350	ZD12-1	T08-L	1.28
SK50-	DC10-110	A	28	57	110	DC10	E080U800	ZD12-1	T06-L	4.20
	DC12-110	B	34	94	110	DC12	E100U350	ZD12-1	T08-L	4.70

注：報價時含扳手，筒夾需單獨訂購。
Notice:Wrench is included, while collet shall be ordered separately.

特 點 / Feature

■動平衡設定: G2.5；30,000 rpm。
■3D處徑向跳動0.003 mm。
■Balanced: G2.5; 30,000 rpm;
■Runout (X3D): < 0.003 mm.

GSK

SK-GSK High Speed Milling Holder
SK-GSK高速精密筒夾本體



MAX 45,000 min⁻¹

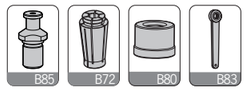

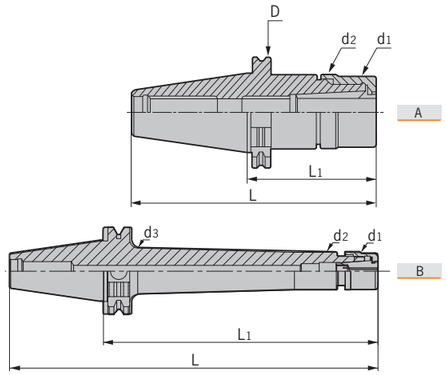

型號 Specification		圖示 Figure	D	d1	d2	d3	L	L1	T	適用筒夾 Suit collet	重量 Weight
SK30-	GSK6-70	A	50	19.5	20	-	117.8	70	M6x1	DSK6	0.45
	GSK6-100	A	50	19.5	20	-	147.8	100	M6x1	DSK6	0.64
	GSK10-70	A	50	27	27.5	-	117.8	70	M10x1.5	DSK10	0.46
	GSK10-100	A	50	27	27.5	-	147.8	100	M10x1.5	DSK10	0.70
	GSK16-100	A	50	40	40.5	-	147.8	100	M16x2	DSK16	1.00
	GSK16-120	A	50	40	40.5	-	167.8	120	M16x2	DSK16	1.25
	GSK16-150	A	50	40	40.5	-	197.8	150	M16x2	DSK16	1.35
	GSK20-70	A	50	48	48.5	-	117.8	70	M16x2	DSK20	0.75
	GSK20-100	A	50	48	48.5	-	147.8	100	M16x2	DSK20	1.15
	GSK25-100	A	50	55	55	-	147.8	100	M20x2	DSK25	1.20
SK40-	GSK6-70	A	63.55	19.5	20	-	138.4	70	M6x1	DSK6	1.05
	GSK6-100	A	63.55	19.5	20	-	168.4	100	M6x1	DSK6	1.25
	GSK6-120	A	63.55	19.5	20	-	188.4	120	M6x1	DSK6	1.39
	GSK6-150L	B	63.55	19.5	20	26.4	218.4	150	M6x1	DSK6	1.55
	GSK10-70	A	63.55	27	27.5	-	138.4	70	M10x1.5	DSK10	1.10
	GSK10-100	A	63.55	27	27.5	-	168.4	100	M10x1.5	DSK10	1.30
	GSK10-120	A	63.55	27	27.5	-	188.4	120	M10x1.5	DSK10	1.42
	GSK10-150	A	63.55	27	27.5	-	218.4	150	M10x1.5	DSK10	1.55
	GSK10-200L	B	63.55	27	27.5	33.7	268.4	200	M10x1.5	DSK10	1.85
	GSK16-70	A	63.55	40	40.5	-	138.4	70	M16x2	DSK16	1.21
	GSK16-100	A	63.55	40	40.5	-	168.4	100	M16x2	DSK16	1.42
	GSK16-120	A	63.55	40	40.5	-	188.4	120	M16x2	DSK16	1.61
	GSK16-150	A	63.55	40	40.5	-	218.4	150	M16x2	DSK16	1.80
	GSK16-200L	B	63.55	40	40.5	45.7	268.4	200	M16x2	DSK16	1.95
	GSK20-70	A	63.55	48	48.5	-	138.4	70	M16x2	DSK20	1.52
	GSK20-100	A	63.55	48	48.5	-	168.4	100	M16x2	DSK20	1.68
	GSK20-120	A	63.55	48	48.5	-	188.4	120	M16x2	DSK20	1.90
	GSK20-150	A	63.55	48	48.5	-	218.4	150	M16x2	DSK20	2.10
	GSK20-200L	B	63.55	48	48.5	55.7	268.4	200	M16x2	DSK20	2.30
	GSK25-100	A	63.55	55	55	-	168.4	100	M20x2	DSK25	1.81
	GSK25-120	A	63.55	55	55	-	188.4	120	M20x2	DSK25	2.05
	GSK25-150	A	63.55	55	55	-	218.4	150	M20x2	DSK25	2.30
	GSK25-200L	B	63.55	55	55	59.9	268.4	200	M20x2	DSK25	2.65

轉下頁
See next page

GSK

SK-GSK High Speed Milling Holder
SK-GSK高速精密筒夾本體

型號 Specification		圖示 Figure	D	d1	d2	d3	L	L1	T	適用筒夾 Suit collet	重量 Weight
SK50-	GSK10-105	A	97.5	27	27.5	-	206.75	105	M10x1.5	DSK10	3.78
	GSK10-135	A	97.5	27	27.5	-	236.75	135	M10x1.5	DSK10	4.00
	GSK10-165	A	97.5	27	27.5	-	266.75	165	M10x1.5	DSK10	4.33
	GSK10-200L	B	97.5	27	27.5	35.2	301.75	200	M10x1.5	DSK10	4.75
	GSK16-100	A	97.5	40	40.5	-	201.75	100	M16x2	DSK16	3.93
	GSK16-125	A	97.5	40	40.5	-	226.75	125	M16x2	DSK16	4.17
	GSK16-150	A	97.5	40	40.5	-	251.75	150	M16x2	DSK16	4.49
	GSK16-200L	B	97.5	40	40.5	48.4	301.75	200	M16x2	DSK16	5.50
	GSK16-250L	B	97.5	40	40.5	48.4	351.75	250	M16x2	DSK16	6.50
	GSK20-100	A	97.5	48	48.5	-	201.75	100	M16x2	DSK20	4.10
	GSK20-125	A	97.5	48	48.5	-	226.75	125	M16x2	DSK20	4.32
	GSK20-150	A	97.5	48	48.5	-	251.75	150	M16x2	DSK20	4.65
	GSK20-200	A	97.5	48	48.5	-	301.75	200	M16x2	DSK20	5.75
	GSK20-250L	B	97.5	48	48.5	55.4	351.75	250	M16x2	DSK20	6.78
	GSK20-300L	B	97.5	48	48.5	55.4	401.75	300	M16x2	DSK20	7.80
	GSK25-100	A	97.5	55	55	-	201.75	100	M20x2	DSK25	4.10
	GSK25-125	A	97.5	55	55	-	226.75	125	M20x2	DSK25	4.62
	GSK25-150	A	97.5	55	55	-	251.75	150	M20x2	DSK25	5.10
	GSK25-200	A	97.5	55	55	-	301.75	200	M20x2	DSK25	5.81
	GSK25-250L	B	97.5	55	55	61.4	351.75	250	M20x2	DSK25	6.85
	GSK25-300L	B	97.5	55	55	61.4	401.75	300	M20x2	DSK25	8.00

注：筒夾與扳手需單獨另購，可選配中心出水螺帽與端面出水螺帽詳見B73頁。
Notice: Collets and wrenchs shall be ordered separately.

特 點 / Feature

■動平衡設定: G2.5；25,000 rpm。
■3D處徑向跳動0.005 mm。

■Balanced: G2.5; 25,000 rpm;
■Runout (X3D): < 0.005 mm.

DSK

SK-DSK High Speed Milling Holder
SK-DSK高速精密筒夾本體



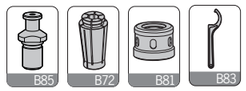

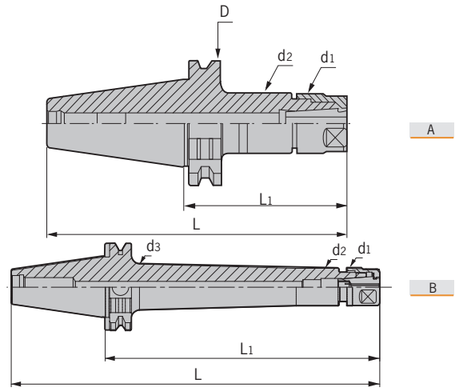

型號 Specification		圖示 Figure	D	d1	d2	d3	L	L1	T	適用筒夾 Suit collet	重量 Weight
SK30-	DSK6-70	A	50	20	20	-	117.8	70	M6x1	DSK6	0.45
	DSK6-100	A	50	20	20	-	147.8	100	M6x1	DSK6	0.64
	DSK10-70	A	50	27.5	27.5	-	117.8	70	M10x1.5	DSK10	0.46
	DSK10-100	A	50	27.5	27.5	-	147.8	100	M10x1.5	DSK10	0.70
	DSK16-100	A	50	40.5	40.5	-	147.8	100	M16x2	DSK16	1.00
	DSK16-120	A	50	40.5	40.5	-	167.8	120	M16x2	DSK16	1.25
	DSK16-150	A	50	40.5	40.5	-	197.8	150	M16x2	DSK16	1.35
	DSK20-70	A	50	48.5	48.5	-	117.8	70	M16x2	DSK20	0.75
	DSK20-100	A	50	48.5	48.5	-	147.8	100	M16x2	DSK20	1.15
	DSK25-100	A	50	55	55	-	147.8	100	M20x2	DSK25	1.20
SK40-	DSK6-70	A	63.55	20	20	-	138.4	70	M6x1	DSK6	1.05
	DSK6-100	A	63.55	20	20	-	168.4	100	M6x1	DSK6	1.25
	DSK6-120	A	63.55	20	20	-	188.4	120	M6x1	DSK6	1.39
	DSK6-150L	B	63.55	20	20	26.4	218.4	150	M6x1	DSK6	1.55
	DSK10-70	A	63.55	27.5	27.5	-	138.4	70	M10x1.5	DSK10	1.10
	DSK10-100	A	63.55	27.5	27.5	-	168.4	100	M10x1.5	DSK10	1.30
	DSK10-120	A	63.55	27.5	27.5	-	188.4	120	M10x1.5	DSK10	1.42
	DSK10-150	A	63.55	27.5	27.5	-	218.4	150	M10x1.5	DSK10	1.55
	DSK10-200L	B	63.55	27.5	27.5	33.7	268.4	200	M10x1.5	DSK10	1.85
	DSK16-70	A	63.55	40.5	40.5	-	138.4	70	M16x2	DSK16	1.21
	DSK16-100	A	63.55	40.5	40.5	-	168.4	100	M16x2	DSK16	1.42
	DSK16-120	A	63.55	40.5	40.5	-	188.4	120	M16x2	DSK16	1.61
	DSK16-150	A	63.55	40.5	40.5	-	218.4	150	M16x2	DSK16	1.80
	DSK16-200L	B	63.55	40.5	40.5	45.7	268.4	200	M16x2	DSK16	1.95
	DSK20-70	A	63.55	48.5	48.5	-	138.4	70	M16x2	DSK20	1.52
	DSK20-100	A	63.55	48.5	48.5	-	168.4	100	M16x2	DSK20	1.68
	DSK20-120	A	63.55	48.5	48.5	-	188.4	120	M16x2	DSK20	1.90
	DSK20-150	A	63.55	48.5	48.5	-	218.4	150	M16x2	DSK20	2.10
	DSK20-200L	B	63.55	48.5	48.5	55.7	268.4	200	M16x2	DSK20	2.30
	DSK25-100	A	63.55	55	55	-	168.4	100	M20x2	DSK25	1.81
	DSK25-120	A	63.55	55	55	-	188.4	120	M20x2	DSK25	2.05
	DSK25-150	A	63.55	55	55	-	218.4	150	M20x2	DSK25	2.30
	DSK25-200L	B	63.55	55	55	59.9	268.4	200	M20x2	DSK25	2.65

轉下頁
See next page

DSK

SK-DSK High Speed Milling Holder
SK-DSK高速精密筒夾本體

型號 Specification		圖示 Figure	D	d1	d2	d3	L	L1	T	適用筒夾 Suit collet	重量 Weight
SK50-	DSK10-105	A	97.5	27.5	27.5	-	206.75	105	M10x1.5	DSK10	3.78
	DSK10-135	A	97.5	27.5	27.5	-	236.75	135	M10x1.5	DSK10	4.00
	DSK10-165	A	97.5	27.5	27.5	-	266.75	165	M10x1.5	DSK10	4.33
	DSK10-200L	B	97.5	27.5	27.5	35.2	301.75	200	M10x1.5	DSK10	4.75
	DSK16-100	A	97.5	40.5	40.5	-	201.75	100	M16x2	DSK16	3.93
	DSK16-125	A	97.5	40.5	40.5	-	226.75	125	M16x2	DSK16	4.17
	DSK16-150	A	97.5	40.5	40.5	-	251.75	150	M16x2	DSK16	4.49
	DSK16-200L	B	97.5	40.5	40.5	48.4	301.75	200	M16x2	DSK16	5.50
	DSK16-250L	B	97.5	40.5	40.5	48.4	351.75	250	M16x2	DSK16	6.50
	DSK20-100	A	97.5	48.5	48.5	-	201.75	100	M16x2	DSK20	4.10
	DSK20-125	A	97.5	48.5	48.5	-	226.75	125	M16x2	DSK20	4.32
	DSK20-150	A	97.5	48.5	48.5	-	251.75	150	M16x2	DSK20	4.65
	DSK20-200	A	97.5	48.5	48.5	-	301.75	200	M16x2	DSK20	5.75
	DSK20-250L	B	97.5	48.5	48.5	55.4	351.75	250	M16x2	DSK20	6.78
	DSK20-300L	B	97.5	48.5	48.5	55.4	401.75	300	M16x2	DSK20	7.80
	DSK25-100	A	97.5	55	55	-	201.75	100	M20x2	DSK25	4.1
	DSK25-125	A	97.5	55	55	-	226.75	125	M20x2	DSK25	4.62
	DSK25-150	A	97.5	55	55	-	251.75	150	M20x2	DSK25	5.10
	DSK25-200	A	97.5	55	55	-	301.75	200	M20x2	DSK25	5.81
	DSK25-250L	B	97.5	55	55	61.4	351.75	250	M20x2	DSK25	6.85
	DSK25-300L	B	97.5	55	55	61.4	401.75	300	M20x2	DSK25	8.00

注：筒夾與扳手需單獨另購，可選配中心出水螺帽與端面出水螺帽詳見B73頁。
Notice: Collets and wrenchs shall be ordered separately.

特 點 / Feature

■動平衡設定: G2.5； 20,000 rpm。
■3D處徑向跳動0.005 mm。

■Balanced: G2.5; 20,000 rpm;
■Runout (X3D): < 0.005 mm.

ER

SK-ER Spring Collet Chuck
SK-ER彈性筒夾本體



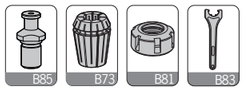

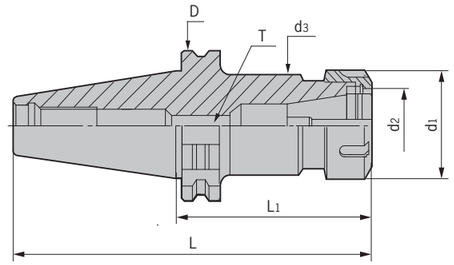

型號 Specification		D	d1	d2	d3	L1	L	重量 Weight
SK30-	ER11-60	50	19	11	19	60	127.8	0.45
	ER16-70	50	28	16	28	70	117.8	0.52
	ER16-100	50	28	16	28	100	147.8	0.64
	ER20-70	50	34	20	34	70	117.8	0.57
	ER20-100	50	34	20	34	100	147.8	0.76
	ER25-70	50	42	25	42	70	117.8	0.66
	ER32-70	50	50	32	50	70	117.8	0.72
SK40-	ER11-80	63.55	19	11	19	80	148.4	0.70
	ER11-125	63.55	19	11	19	125	193.4	0.96
	ER16-70	63.55	28	16	28	70	138.4	1.08
	ER16-100	63.55	28	16	28	100	168.4	1.21
	ER16-125	63.55	28	16	28	125	193.4	1.30
	ER16-150	63.55	28	16	28	150	218.4	1.44
	ER20-70	63.55	34	20	34	70	138.4	1.12
	ER20-100	63.55	34	20	34	100	168.4	1.33
	ER20-135	63.55	34	20	34	135	203.4	1.48
	ER20-160	63.55	34	20	34	160	228.4	1.65
	ER25-70	63.55	42	25	42	70	138.4	1.22
	ER25-100	63.55	42	25	42	100	168.4	1.49
	ER25-150	63.55	42	25	42	150	218.4	1.97
	ER25-200	63.55	42	25	42	200	268.4	2.23
	ER32-70	63.55	50	32	50	70	138.4	1.27
	ER32-100	63.55	50	32	50	100	168.4	1.70
	ER32-150	63.55	50	32	50	150	218.4	2.39
	ER40-80	63.55	63	40	63	80	148.4	1.62
	ER40-100	63.55	63	40	63	100	168.4	2.08
	ER40-135	63.55	63	40	63	135	218.4	2.75
SK50-	ER16-100	97.5	28	16	28	100	201.75	3.77
	ER16-135	97.5	28	16	28	135	236.75	3.95
	ER16-160	97.5	28	16	28	160	261.75	4.04
	ER16-200	97.5	28	16	28	200	301.75	5.04
	ER20-100	97.5	34	20	34	100	201.75	3.86
	ER20-135	97.5	34	20	34	135	236.75	4.08
	ER20-160	97.5	34	20	34	160	261.75	4.22

轉下頁
See next page

ER/VER

SK-ER Spring Collet Chuck
SK-ER彈性筒夾本體

型號 Specification		D	d1	d2	d3	L1	L	重量 Weight
SK50-	ER25-70	97.5	42	25	42	70	171.75	3.64
	ER25-100	97.5	42	25	42	100	201.75	4.26
	ER25-150	97.5	42	25	42	150	251.75	4.54
	ER25-200	97.5	42	25	42	200	301.75	5.01
	ER32-80	97.5	50	32	50	80	181.75	3.80
	ER32-120	97.5	50	32	50	120	221.75	4.35
	ER32-160	97.5	50	32	50	160	261.75	4.82
	ER32-200	97.5	50	32	50	200	301.75	5.32
	ER40-80	97.5	63	40	63	80	181.75	3.93
	ER40-120	97.5	63	40	63	120	221.75	4.86
	ER40-160	97.5	63	40	63	160	261.75	5.51
	ER40-200	97.5	63	40	63	200	301.75	6.21

注：筒夾和扳手需單獨訂購。
Notice: Collets and wrenchs shall be ordered separately.

SK-VER Tapping Chuck
SK-VER快換式微補償攻牙刀柄

NEW



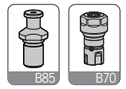

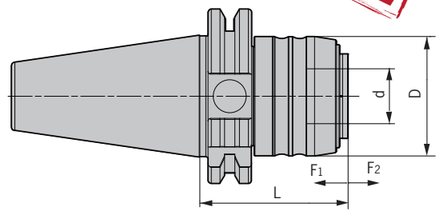

型號 Specification		D	d	L	F1	F2	攻牙能力 Tapping capacity	適用延長杆 Suit extender	重量 Weight
SK40-	VER16-53	43.5	20	53	0.2	1	M3-M12	VER16-M24	1.05
	VER20-80	52	25	80	0.2	1	M5-M16	VER20-M26	1.22
	VER25-90	60	32	90	0.2	1	M6-M20	VER25-M28	1.42
	VER32-106	72	40	106	0.2	1	M10-M24	VER32-M30	1.71
	VER40-115	87	50	115	0.2	1	M14-M33	VER40-M32	2.15
SK50-	VER16-53	43.5	20	53	0.2	1	M3-M12	VER16-M24	3.36
	VER20-83	52	25	83	0.2	1	M5-M16	VER20-M26	3.55
	VER25-74	60	32	74	0.2	1	M6-M20	VER25-M28	3.65
	VER32-100	72	40	100	0.2	1	M10-M24	VER32-M30	4.15
	VER40-115	87	50	115	0.2	1	M14-M33	VER40-M32	4.35

注：筒夾和扳手需單獨訂購。
Notice: Collets and wrenchs shall be ordered separately.

特 點 / Feature

■顯著提高絲錐使用壽命80%以上。
■有效提高加工生產效率2-4倍。
■明顯提高表面加工質量與精度。
■選用ER攻絲專用筒夾夾持。
■無需依賴設備精度。
■擠壓絲錐首選。

■Tap tool life increased by 80% and above;
■Work efficiency increased 2 to 4 times;
■Better surface quality;
■With ER tapping collet;
■Best choice for squeeze taps.

TER

SK-TER Tapping Chuck
SK-TER伸縮攻牙器刀柄



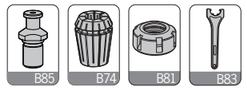

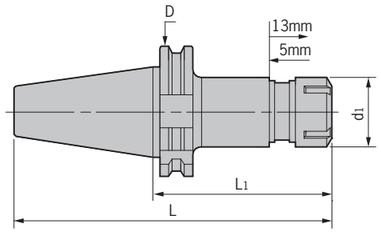

型號 Specification		D	d1	L1	L	適用筒夾 Suit collet	攻牙能力 Tapping capacity	重量 Weight
SK40-	TER16-120	63.55	28	120	188.4	ER16	M3-M10	1.10
	TER16-150	63.55	28	150	218.4	ER16	M3-M10	1.40
	TER20-100	63.55	34	100	168.4	ER20	M3-M16	1.22
	TER20-150	63.55	34	150	218.4	ER20	M3-M16	1.70
	TER20-200	63.55	28	200	268.4	ER20	M3-M16	2.20
	TER32-120	63.55	50	120	188.4	ER32	M3-M27	1.52
SK50-	TER16-120	97.50	28	120	221.75	ER16	M3-M10	3.80
	TER16-150	97.50	28	150	251.75	ER16	M3-M10	4.12
	TER20-100	97.50	34	100	201.75	ER20	M3-M16	3.83
	TER20-150	97.50	34	150	251.75	ER20	M3-M16	4.45
	TER20-200	97.50	28	200	301.75	ER20	M3-M16	5.00
	TER32-120	97.50	50	120	221.75	ER32	M3-M27	4.40

注：筒夾和扳手需單獨訂購。
Notice: Collets and wrenchs shall be ordered separately.

特點 / Feature

■攻牙器使用ER筒夾夾持，請您在選購時認準 ER筒夾內徑。
■本刀體的攻牙器頭部采用了浮動設計，攻螺紋時的扭距可通過內部鋼珠傳遞。
■本刀柄主要用于中心機和CNC銑床攻牙。
■Clamped with ER spring collect, please check the innsize of ER collet When you choose .
■The tapping head of this holder designed with floating tap, the tapping torque is transmitted through the ball inside the floating tap holder.
■Mainly used on machine center and CNC milling machine for tapping.

TPG/TPM

SK-TPG Rigid Tapping Chuck
SK-TPG剛性攻牙刀柄

NEW



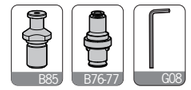

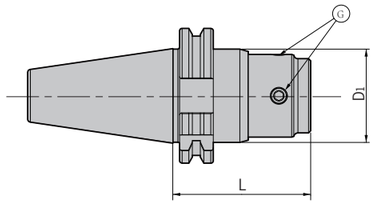

型號 Specification		D1	L	G	適用筒夾 Suit collet	L型扳手 Wrench	攻牙能力 Tapping capacity	重量 Weight
SK40-	TPG312	44	65	M8X1P	TPE312	L06	M3-M12	1.23
	TPG1024	56	75	M10X1P	TPE1024	L08	M10-M24	1.39
SK50-	TPG312	44	80	M8X1P	TPE312	L06	M3-M12	3.88
	TPG1024	56	80	M10X1P	TPE1024	L08	M10-M24	4.09

注：筒夾需單獨訂購。
Notice: Collets shall be ordered separately.

特點 / Feature

■適用于高精度同步數控加工。
■由主軸中心提供內冷却。
■爲達到高速攻絲的剛性設計。
■短型且緊凑的設計。

■For high precision tapping;
■With internal coolant hole;
■Design for high speed and rigid tapping;
■Short and compact design.

SK-TPM Tapping Chuck With High Rigidity
SK-TPM扭力伸縮攻牙刀柄



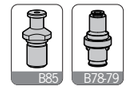

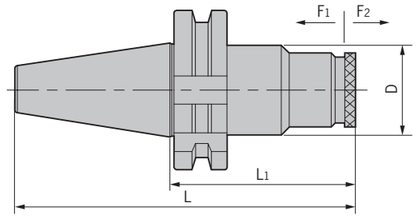

型號 Specification		D	F1	F2	L1	L	適用筒夾 Suit collet	攻牙能力 Tapping capacity	重量 Weight
SK40-	TPM316	50	10	20	96	163	TPD316	M3-M16	1.56
	TPM830	66	10	25	143.6	230	TPD830	M8-M30	2.62
SK50-	TPM316	50	10	20	96	163	TPD316	M3-M16	4.24
	TPM830	66	10	25(80)	143.6	230	TPD830	M8-M30	4.77

注：筒夾需單獨訂購。
Notice: Collets shall be ordered separately.

HPM/HPC

SK-HPM High Speed Milling Chuck
SK-HPM高速精密强力銑刀夾頭



MAX 30,000 min⁻¹

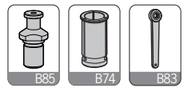

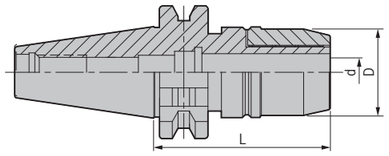

型號 Specification		範圍 Range	D	d	L	適用筒夾 Suit collet	重量 Weight
SK30-	HPM20-75	6-20	54	20	75	SC20	1.80
SK40-	HPM20-80	6-20	54	20	80	SC20	2.40
	HPM20-105	6-20	54	20	105	SC20	2.50
	HPM20-135	6-20	54	20	135	SC20	2.80
	HPM32-105	6-32	68	32	105	SC32	2.80
	HPM32-135	6-32	68	32	135	SC32	3.00
SK50-	HPM20-105	6-20	54	20	105	SC20	4.50
	HPM20-135	6-20	54	20	135	SC20	4.70
	HPM32-110	6-32	68	32	110	SC32	5.20
	HPM32-135	6-32	68	32	135	SC32	5.90

SK-HPC High Speed Milling Chuck
SK-HPC高速精密强力銑刀夾頭



MAX 30,000 min⁻¹

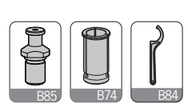

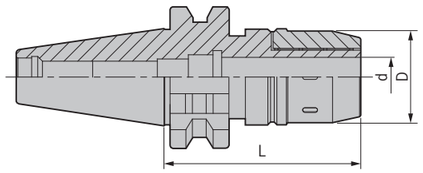

型號 Specification		範圍 Range	D	d	L	適用筒夾 Suit collet	重量 Weight
SK30-	HPC16-70	3-16	46	16	70	SC16	1.40
	HPC20-75	6-20	51.5	20	75	SC20	1.80
SK40-	HPC16-70	3-16	46	16	70	SC16	1.60
	HPC16-105	3-16	46	16	105	SC16	1.80
	HPC16-135	3-16	46	16	135	SC16	2.30
	HPC20-80	6-20	51.5	20	80	SC20	2.40
	HPC20-105	6-20	51.5	20	105	SC20	2.50
	HPC20-135	6-20	51.5	20	135	SC20	2.80
	HPC32-105	6-32	70.5	32	105	SC32	2.80
	HPC32-135	6-32	70.5	32	135	SC32	3.00
SK50-	HPC16-90	3-16	46	16	90	SC16	3.90
	HPC16-110	3-16	46	16	110	SC16	4.10
	HPC16-135	3-16	46	16	135	SC16	4.30
	HPC16-150	3-16	46	16	150	SC16	4.50
	HPC20-105	6-20	51.5	20	105	SC20	4.50
	HPC20-135	6-20	51.5	20	135	SC20	4.70
	HPC20-150	6-20	51.5	20	150	SC20	4.90
	HPC32-110	6-32	70.5	32	110	SC32	5.20
	HPC32-135	6-32	70.5	32	135	SC32	5.90
	HPC32-165	6-32	70.5	32	165	SC32	6.60

注：報價時含扳手，筒夾需單獨訂購。
Notice:Wrench is included,while collet shall be ordered separately.

特點 / Feature

■動平衡設定: G6.3；15,000 rpm。
■3D處徑向跳動0.02 mm。

■Balanced: G6.3; 15,000 rpm;
■Runout (X3D): < 0.02 mm.

MLC

SK-MLC Power Milling Chuck
SK-MLC强力筒夾本體



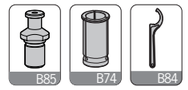

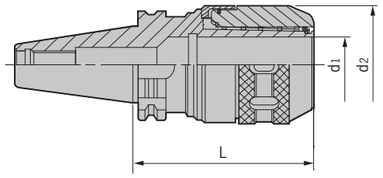

型號 Specification		範圍 Range	D	d	L	適用筒夾 Suit collet	重量 Weight
SK30-	MLC20-85	6-20	51.5	20	85	SC20	1.90
	MLC20-100	6-20	51.5	20	100	SC20	2.10
	MLC32-135	6-32	70.5	32	135	SC32	3.00
SK40-	MLC20-85	6-20	51.5	20	85	SC20	2.40
	MLC20-100	6-20	51.5	20	100	SC20	2.50
	MLC20-135	6-20	51.5	20	135	SC20	2.80
	MLC32-105	6-32	70.5	32	105	SC32	2.80
	MLC32-135	6-32	70.5	32	135	SC32	3.10
SK50-	MLC20-105	6-20	51.5	20	105	SC20	4.50
	MLC20-150	6-20	51.5	20	150	SC20	4.90
	MLC32-85	6-32	70.5	32	85	SC32	4.50
	MLC32-110	6-32	70.5	32	110	SC32	5.20
	MLC32-135	6-32	70.5	32	135	SC32	5.90
	MLC42-110	6-42	86.0	42	110	SC42	6.00
	MLC42-165	6-42	86.0	42	165	SC42	7.40

注：報價時含扳手，筒夾需單獨訂購。
Notice:Wrench is included,while collet shall be ordered separately.

特點 / Feature

■刀柄采用四組220根針狀滾針經特殊排列而成。
■端面鎖緊增强了本體鋼性强度。
■立銑刀無振動無滑移實現了最大能力範圍的重銑削加工，跳動精度0.02mm。
■The tool holder uses four special layers with 220 pieces bearing arranged in particular.
■ It can reduce the locking resistanced and also show best performance on heavy cutting.
■The usual length of power milling chuck show that the highest runout accuracy can reach to 0.02mm.

SK-MLC Power Chuck Kit
SK-MLC强力筒夾本體套裝組

型號 Specification		筒夾 Collet	數量 PCS/SET	重量 Weight
SK40-	MLC20-100-5PCS	SC20-6,8,10,12,16	5	7.30
	MLC32-105-7PCS	SC32-6,8,10,12,16,20,25	7	7.80
SK50-	MLC20-105-5PCS	SC20-6,8,10,12,16	5	7.50
	MLC32-110-7PCS	SC32-6,8,10,12,16,20,25	7	8.40
	MLC42-110-8PCS	SC42-6,8,10,12,16,20,25,32	8	11.40



SLN

SK-SLN Side Lock Holder
SK-SLN側固式刀柄



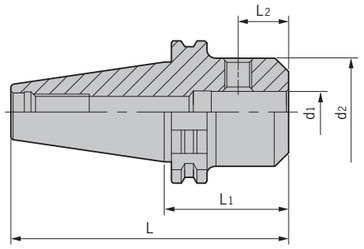



型號 Specification		圖示 Figure	d1	d2	L1	L2	L3	L	側面壓緊螺釘 Side-lock screw	重量 Weight
SK30-	SLN6-50	A	6	25	50	18	-	97.8	M060U080	0.41
	SLN8-50	A	8	28	50	18	-	97.8	M080U100	0.46
	SLN10-50	A	10	35	50	20	-	97.8	M100U120	0.54
	SLN12-50	A	12	42	50	22.5	-	97.8	M120U140	0.61
	SLN16-63	A	16	48	63	24	-	110.8	M140U160	0.85
SK40-	SLN6-50	A	6	25	50	18	-	118.4	M060U080	1.00
	SLN8-50	A	8	28	50	18	-	118.4	M080U100	1.01
	SLN10-50	A	10	35	50	20	-	118.4	M100U100	1.15
	SLN12-50	A	12	42	50	22.5	-	118.4	M120U140	1.26
	SLN16-63	A	16	48	63	24	-	131.4	M140U160	1.31
	SLN20-63	A	20	52	63	25	-	131.4	M160U160	1.33
	SLN25-100	B	25	65	100	24	25	168.4	M180Z180P	2.32
	SLN32-105	B	32	72	105	24	28	168.4	M200Z180P	2.37
SK50-	SLN6-63	A	6	25	63	18	-	164.75	M060U080	3.12
	SLN8-63	A	8	28	63	18	-	164.75	M080U100	3.15
	SLN10-63	A	10	35	63	20	-	164.75	M100U100	3.63
	SLN12-63	A	12	42	63	22.5	-	164.75	M120U140	3.86
	SLN16-63	A	16	48	63	24	-	164.75	M140U160	3.90
	SLN20-63	A	20	52	63	25	-	164.75	M160U160	3.93
	SLN25-80	B	25	65	80	24	25	181.75	M180Z180P	4.62
	SLN32-100	B	32	72	100	24	25	201.75	M200Z180P	4.80
	SLN40-105	B	40	90	105	30	32	201.75	M200Z180P	5.21
	SLN42-100	B	42	90	100	30	32	201.75	M200Z180P	6.00

注：扳手需單獨訂購。
Notice: Wrenchs shall be ordered separately.

MTA/MTB

SK-MTA Morse Taper Holder
SK-MTA莫氏錐套刀柄（鑽頭套筒）





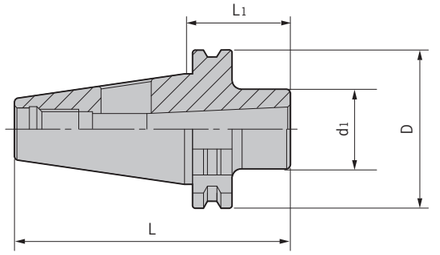

型號 Specification		莫氏錐度 MT.NO	D	d1	L1	L	重量 Weight
SK30-	MTA1-50	1	50	25	50	97.8	0.42
	MTA2-50	2	50	32	50	97.8	0.50
	MTA3-80	3	50	40	80	127.8	0.60
SK40-	MTA1-50	1	63.55	25	50	118.4	0.95
	MTA2-50	2	63.55	32	50	118.4	1.00
	MTA3-70	3	63.55	40	70	138.4	1.13
	MTA4-95	4	63.55	48	95	163.4	1.35
SK50-	MTA1-45	1	97.50	25	45	146.75	3.59
	MTA2-60	2	97.50	32	60	161.75	3.63
	MTA3-65	3	97.50	40	65	166.75	3.65
	MTA4-95	4	97.50	48	95	196.75	3.88
	MTA5-105	5	97.50	63	105	206.75	3.74

SK-MTB Morse Taper Holder
SK-MTB莫氏錐套刀柄（螺絲鎖緊）



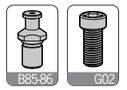

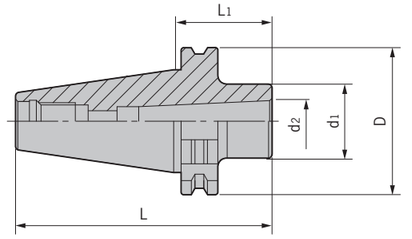

型號 Specification		莫氏錐度 MT.NO	D	d1	d2	L1	L	拉緊螺釘 Tension screw	範圍 Range	重量 Weight
SK30-	MTB1-50	1	50	25	12.065	50	97.8	E060U160	Φ10-Φ14	0.50
	MTB2-60	2	50	32	17.780	60	107.8	SK30-45-MT2	Φ16-Φ22	0.55
	MTB3-75	3	50	40	23.825	75	122.8	SK30-45-MT3	Φ24-Φ32	0.65
SK40-	MTB1-50	1	63.55	25	12.065	50	118.4	E060U160	Φ10-Φ14	0.95
	MTB2-50	2	63.55	32	17.780	50	118.4	E100U300-MTB	Φ16-Φ22	1.00
	MTB3-70	3	63.55	40	23.825	70	138.4	SK40-45-MT3	Φ24-Φ32	1.13
	MTB4-95	4	63.55	48	31.267	95	163.4	SK40-45-MT4	Φ32-Φ50	1.35
SK50-	MTB1-45	1	97.50	25	12.065	45	146.75	E060U250	Φ10-Φ14	3.59
	MTB2-60	2	97.50	32	17.780	60	161.75	E100U350	Φ16-Φ22	3.64
	MTB3-65	3	97.50	40	23.825	65	166.75	E120U400	Φ24-Φ32	3.60
	MTB4-95	4	97.50	48	31.267	95	196.75	E160U400-MTB	Φ32-Φ50	3.88
	MTB5-105	5	97.50	63	44.399	105	206.75	SK50-45-MT5	Φ55-Φ60	3.74

注：報價時含鎖緊拉釘。
Notice:Tension screw is included.

SPU/FMB

SK-SPU Drill Chuck Holder
SK-SPU直結式鑽夾頭刀柄



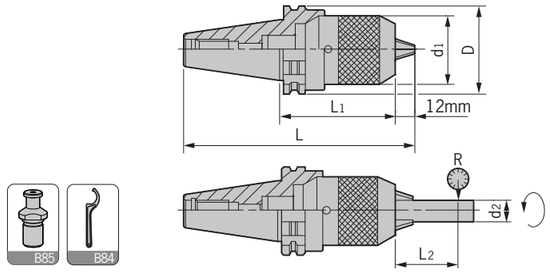

型號 Specification		D	d1	d2	L1	L2	L	偏擺精度 R	重量 Weight
SK30-	SPU8-80	50	37	8	80	55	136.8	0.04	0.72
	SPU13-120	50	50	13	120	75	179.8	0.04	1.70
SK40-	SPU8-75	63.55	37	8	75	55	152.4	0.04	1.36
	SPU13-110	63.55	50	13	110	75	180.4	0.04	1.76
	SPU16-125	63.55	57	16	125	80	190.4	0.04	2.18
SK50-	SPU8-75	97.50	37	8	75	55	185.75	0.04	4.10
	SPU13-100	97.50	50	13	100	75	213.75	0.04	4.50
	SPU16-105	97.50	57	16	105	80	218.75	0.04	4.78

注：報價時含扳手。
Notice:Wrench is included.

SK-FMB Face Milling Holder
SK-FMB平面銑刀柄



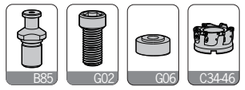

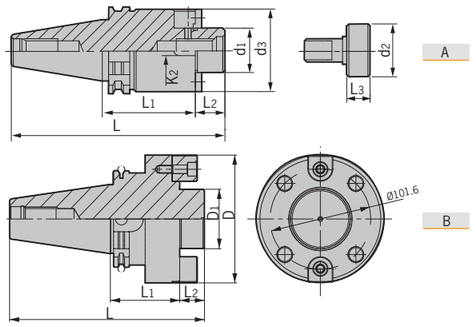

型號 Specification		圖示 Figure	d1	d2	d3	L1	L2	L3	L	刀盤鎖緊螺釘 Lockingscrewforcutter	墊圈 Washer	重量 Weight
SK30-	FMB22-35	A	22	26	47	35	18	14	100.8	E100U300	-	0.70
	FMB27-35	A	27	33	58	35	20	16	102.8	E120U300	FM-1	1.00
SK40-	FMB22-35	A	22	26	47	35	18	14	121.4	E100U300	-	1.20
	FMB27-60	A	27	33	58	60	20	16	148.4	E120U300	FM-1	1.86
	FMB32-60	A	32	40	66	60	22	16	150.4	E160U350	FM-2	2.32
	FMB40-60	A	40	50	82	60	25	20.5	153.4	E200U350	FM-3	2.47
SK50-	FMB22-35	A	22	26	47	35	18	14	154.75	E100U300	-	3.60
	FMB27-35	A	27	33	58	35	20	16	156.75	E120U300	FM-1	3.79
	FMB32-35	A	32	40	66	35	22	16	158.75	E160Z350-40	-	4.10
	FMB40-50	A	40	50	82	50	25	20.5	189.75	E200Z350-50	-	4.57
	FMB60F-70	B	60	-	129	70	25	-	211.75	E160U500	-	8.00

SLO/CSO/PB

SK-SLO Oil-feed Holder
SK-SLO油路刀柄



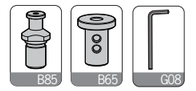

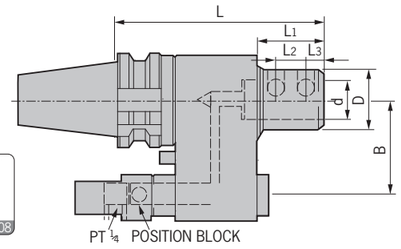

型號 Specification		D	d	L1	L2	L3	L	B	側面壓緊螺釘 Side-lock screw	重量 Weight
SK40-	SL032-150	72	32	50	15	15	150	60/65	M120U200	5.35
	SL040-150	72	40	50	18	19	150	60/65	M140U160	5.04
SK50-	SL032-160	72	32	50	15	15	160	80/82	M120U200	8.64
	SL040-160	72	40	50	18	19	160	80/82	M140U160	8.35

注：報價時含扳手，請于訂購時，依據機臺規格確認中心距離B的尺寸。
Notice:1.Wrench is included; 2.Before order please check the distance B.

CSO Oil-feed Holder Reducing Sleeve
CSO油路刀套



型號 Specification		D	d	d1	L1	L2	L3	L	重量 Weight
CSO	32-16	53	32	16	10	15	15	65	0.40
	32-20	53	32	20	10	15	15	65	0.35
	32-25	53	32	25	10	15	15	65	0.26
	40-16	63	40	16	10	18	19	75	0.74
	40-20	63	40	20	10	18	19	75	0.68
	40-25	63	40	25	10	18	19	75	0.59
	40-32	63	40	32	10	18	19	75	0.41

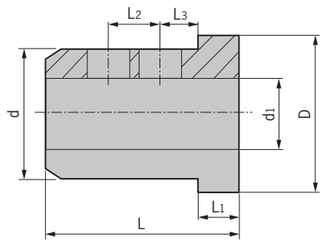

PB Oil-feed Holder Positioning Block
PB油路止動塊

型號 Specification	重量 Weight
BT40-PB30-35	0.53
BT50-PB30-35	0.46



注意：在使用油路刀柄時，止動塊是必需的配套附件。
止動塊可安裝到ATC等機器上。因此，隨着越來越多的不同型號的機器，有必要與機械制造商協商正確安裝。
Notice:Using oil-feed holder, positioning block illustrated here is necessary.
This positioning block can be mounted to different machines. As the mounting differs with different machines, it is necessary to consult the machine manufacturer about the proper mounting.

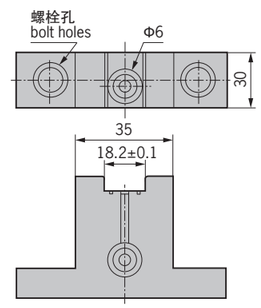

GSK/ER

ISO-GSK High Precision Chuck
ISO-GSK高速精密筒夾本體



MAX 60,000 min⁻¹

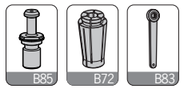

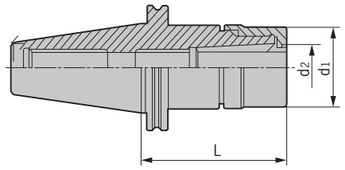

型號 Specification		d_1	d_2	L	筒夾 Collet	重量 Weight
ISO25-	GSK10-40	27	10	40	DSK10	0.30
ISO30-	GSK10-60	27	10	60	DSK10	0.70
	GSK16-60	40	16	60	DSK16	0.80

注：筒夾和扳手需單獨訂購。
Notice: Collets and wrenchs shall be ordered separately.

特點 / Feature

■動平衡設定: G2.5； 30,000 rpm。
■3D處徑向跳動0.005 mm。

■Balanced: G2.5; 30,000 rpm;
■Runout (X3D): < 0.005 mm.

ISO-ER Spring Collet Chuck
ISO-ER彈性筒夾本體



MAX 50,000 min⁻¹

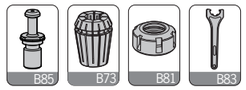

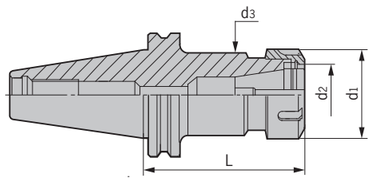

型號 Specification		d_1	d_2	d_3	L	筒夾 Collet	重量 Weight
ISO20-	ER16-30	23	16	22	30	ER16	0.20
ISO25-	ER20-38	28	20	27	38	ER20	0.20
ISO30-	ER16-55	28	16	28	55	ER16	0.60
	ER20-60	34	20	34	60	ER20	0.60
	ER25-60	42	25	42	60	ER25	0.70
	ER32-60	50	32	50	60	ER32	0.70

注：筒夾和扳手需單獨訂購。
Notice: Collets and wrenchs shall be ordered separately.

特點 / Feature

■動平衡設定: G2.5； 25,000 rpm。

■Balanced: G2.5; 25,000 rpm.

DSF-EXTENDER

DSF Shrink Fit Extender
DSF燒結式熱裝延長杆

NEW





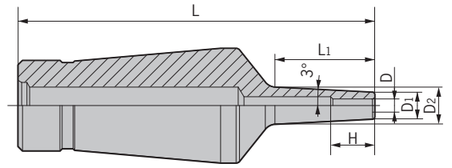

型號 Specification		D	D_1	D_2	L_1	L	H	重量 Weight
DSF12-	D3-35-1.5	3	6	8.4	22	35	10	0.20
	D3-55-1.5	3	6	10.5	42	55	10	0.20
	D3-85-1.5	3	6	13.1	67	85	10	0.20
	D3-110-1.5	3	6	16.2	97	110	10	0.20
	D4-35-1.5	4	7	9.4	22	35	12	0.20
	D4-55-1.5	4	7	11.5	42	55	12	0.20
	D4-85-1.5	4	7	14.1	67	85	12	0.20
	D4-110-1.5	4	7	17.2	97	110	12	0.20
	D5-35-1.5	5	8	10.4	22	35	15	0.20
	D5-55-1.5	5	8	12.5	42	55	15	0.20
	D5-85-1.5	5	8	15.1	67	85	15	0.20
	D5-110-1.5	5	8	18.2	97	110	15	0.20
	D6-35-1.5	6	9	11.4	22	35	18	0.20
	D6-55-1.5	6	9	13.5	42	55	18	0.20
	D6-85-1.5	6	9	16.1	67	85	18	0.20
	D6-110-1.5	6	9	19.2	97	110	18	0.20
	D7-35-3	7	13	15.4	22	35	20	0.30
	D7-55-3	7	13	17.5	42	55	20	0.30
	D7-85-3	7	13	20.1	67	85	20	0.30
	D7-110-3	7	13	23.2	97	110	20	0.30
	D8-35-3	8	14	16.4	22	35	25	0.30
	D8-55-3	8	14	18.5	42	55	25	0.30
	D8-85-3	8	14	21.1	67	85	25	0.30
	D8-110-3	8	14	24.2	97	110	25	0.30
	D9-35-3	9	15	17.4	22	35	30	0.30
	D9-55-3	9	15	19.5	42	55	30	0.30
	D9-85-3	9	15	22.1	67	85	30	0.30
	D9-110-3	9	15	25.2	97	110	30	0.30
	D10-35-3	10	16	18.4	22	35	30	0.30
	D10-55-3	10	16	20.5	42	55	30	0.30
	D10-85-3	10	16	23.1	67	85	30	0.30
	D10-110-3	10	16	26.2	97	110	30	0.30
	D11-35-3	11	17	19.4	22	35	30	0.30
	D11-55-3	11	17	21.5	42	55	30	0.30
	D11-85-3	11	17	24.1	67	85	30	0.30
	D11-110-3	11	17	27.2	97	110	30	0.30
	D12-35-3	12	18	20.4	22	35	30	0.30
	D12-55-3	12	18	22.5	42	55	30	0.30
	D12-85-3	12	18	25.1	67	85	30	0.30
	D12-110-3	12	18	28.2	97	110	30	0.30

SF-EXTENDER

SF Shrink Fit Extender
SF燒結式熱裝延長杆

NEW



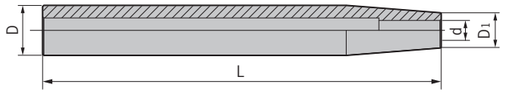

型號 Specification		D	D1	d	L	重量 Weight
C12-	SF3-160	12	8	3	160	0.20
	SF4-160	12	8	4	160	0.21
C16-	SF3-160	16	10	3	160	0.22
	SF4-160	16	10	4	160	0.23
	SF5-160	16	10	5	160	0.24
	SF6-160	16	10	6	160	0.25
C20-	SF5-160	20	14	5	160	0.40
	SF6-160	20	14	6	160	0.42
	SF8-160	20	14	8	160	0.44
C25-	SF8-160	25	20	8	160	0.60
	SF10-160	25	20	10	160	0.62
	SF12-160	25	20	12	160	0.65
C32-	SF10-160	32	27	10	160	0.78
	SF12-160	32	27	12	160	0.81
	SF16-160	32	27	16	160	0.83
	SF20-160	32	27	20	160	0.85

DC Collet Extender
DC直柄式小徑延伸杆



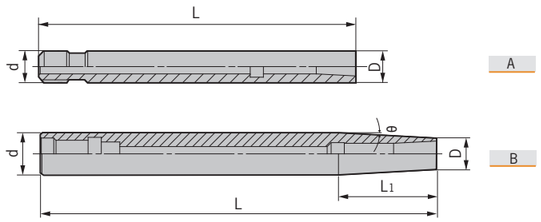

型號 Specification		圖示 Figure	D	d	L1	L	θ	適用夾頭 Suit collet	拉緊螺釘 Tension screw	止動螺母 Stop nut	扳手 Wrench	卡板扳手 WDC Wrench	重量 Weight
C10-	DC4-90	A	9	10	-	90	-	DC4	E040U0700	ZD4-1	T03-L	WDC	0.10
C12-	DC4-120	A	14	12	-	120	-	DC4	E040U0800	ZD4-1	T03-L	WDC	0.12
	DC6-120	A	14	12	-	120	-	DC6	E050U0950	ZD6-3	T04-L	WDC	0.13
C16-	DC6-150	B	14	16	38	150	3°	DC6	E050U1000	ZD6-1	T04-L	WDC	0.22
C20-	DC6-200	B	14	20	76	200	3°	DC6	E050U1150	ZD6-1	T04	WDC	0.42
C25-	DC6-250	B	14	25	124	250	3°	DC6	E050U1500	ZD8-1	T04	WDC	0.50
C20-	DC8-150	B	19	20	28	150	2°	DC8	E060U0800	ZD8-1	T05-L	WDC	0.40
	DC8-200	B	19	20	28	200	2°	DC8	E060U1200	ZD10-1	T05-L	WDC	0.65
C25-	DC10-150	B	24	25	28	150	2°	DC10	E080U0800	ZD10-1	T06-L	WDC	0.60
	DC10-200	B	24	25	28	200	2°	DC10	E080U1200	ZD10-1	T06-L	WDC	0.68
	DC10-250	B	24	25	28	250	2°	DC10	E080U1400	ZD10-1	T06-L	WDC	0.78
C32-	DC12-200	B	30	32	57	200	2°	DC12	E010U1200	ZD12-1	T08	WDC	0.82
	DC12-250	B	30	32	57	250	2°	DC12	E010U1400	ZD12-1	T08	WDC	0.95
	DC12-300	B	28	32	57	300	2°	DC12	E010U1600	ZD12-1	T08	WDC	1.15

DC/DSK-EXTENDER

DSK Collet Extender
DSK直柄彈性筒夾延長杆



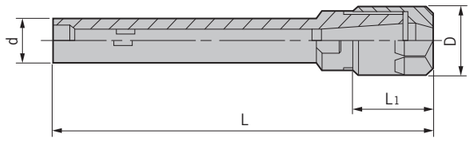

型號 Specification		D	d	L1	L	重量 Weight
C20-	DSK6-120	20	20	20	120	0.28
	DSK6-150	20	20	20	150	0.40
	DSK6-180	20	20	20	180	0.55
	DSK10-120	29	20	38	120	0.36
	DSK10-150	29	20	38	150	0.45
	DSK10-180	29	20	38	180	0.60

ER Collet Extender (M-Type)
M型直柄ER彈性筒夾延長杆



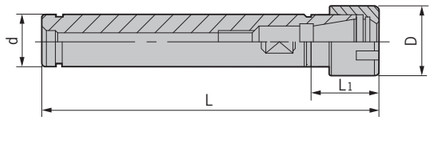

型號 Specification		D	d	L1	L	重量 Weight
C12-	ER11M-100	16	12	17	130.5	0.13
	ER11M-150	16	12	17	180.5	0.18
C16-	ER11M-100	16	16	18.5	128.5	0.18
	ER11M-150	16	16	18.5	158.5	0.24
	ER16M-100	23	16	37	137	0.18
	ER16M-150	23	16	37	187	0.24
C20-	ER16M-100	23	20	25	125	0.26
	ER16M-150	23	20	25	175	0.30
	ER20M-100	28	20	40	140	0.25
	ER20M-150	28	20	40	190	0.39
	ER20M-200	28	20	40	240	0.54
	ER25M-100	35	20	40	140	0.39
C25-	ER20M-150	28	25	28	178	0.55

ER/VER-EXTENDER

ER Collet Extender
ER彈性筒夾延長杆



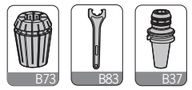

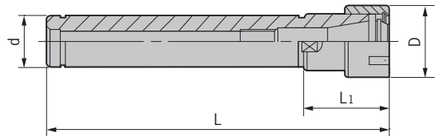

型號 Specification		D	d	L1	L	重量 Weight
C16-	ER16-100	28	16	36	136	0.16
	ER16-150	28	16	30	180	0.28
	ER20-100	34	16	36	136	0.30
C20-	ER16-100	28	20	30	130	0.29
	ER16-150	28	20	30	180	0.38
	ER20-100	34	20	36	136	0.38
	ER20-150	34	20	36	186	0.48
	ER25-100	42	20	46	146	0.45
	ER25-150	42	20	46	196	0.62
C25-	ER16-100	28	25	30	130	0.45
	ER16-150	28	25	30	180	0.60
	ER20-100	34	25	36	136	0.48
	ER20-150	34	25	36	186	0.65
	ER25-100	42	25	46	146	0.52
	ER25-150	42	25	46	196	0.75

VER Synchronized Tapping Extender
VER快換式微補償攻牙延長杆

NEW





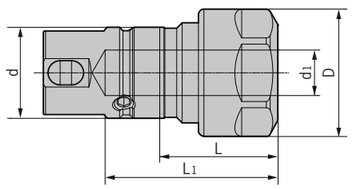

型號 Specification		夾持範圍 Clamping range	D	d	L1	L	攻牙能力 Tapping capacity	重量 Weight
VER-	16-M24	2-10	28	20	37	24	M3-M12	0.15
	16-L55	2-10	28	20	37	55	M3-M12	0.22
	20-M26	2-13	34	25	45	26	M5-M16	0.20
	20-L75	2-13	34	25	45	75	M5-M16	0.29
	25-M28	2-16	42	32	52	28	M6-M20	0.35
	25-L86	2-16	42	32	63	86	M6-M20	0.54
	32-M30	4-20	50	40	64	30	M10-M24	0.50
	32-L90	4-20	50	40	64	90	M10-M24	0.81
	40-M32	6-26	63	50	75	32	M14-M33	0.65
	40-L95	6-26	63	50	75	95	M14-M33	0.98

DC-COLLET

DC Slim Collet
DC小徑筒夾



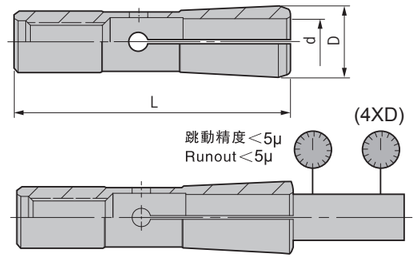

型號 Specification		D	L
DC	4	7	31
	6	9.6	36
	8	14	45
	10	18	52
	12	22	60

型號 Specification		夾持範圍 Clamping range
DC4-	3E	2.75-3
	4E	3.75-4

型號 Specification		夾持範圍 Clamping range
DC6-	3E	2.75-3
	4E	3.75-4
	6E	5.75-6

型號 Specification		夾持範圍 Clamping range
DC8-	3E	2.75-3
	4E	3.75-4
	6E	5.75-6
	8E	7.75-8

型號 Specification		夾持範圍 Clamping range
DC10-	3E	2.75-3
	4E	3.75-4
	6E	5.75-6
	8E	7.75-8
	10E	9.75-10

型號 Specification		夾持範圍 Clamping range
DC12-	3E	2.75-3
	4E	3.75-4
	6E	5.75-6
	8E	7.75-8
	10E	9.75-10
	12E	11.75-12

特 點 / Feature

■DC筒夾設計重點强調立銑刀的夾持力。
■每個夾頭的夾持範圍爲0.25mm。
■The design of DC collects is emphasized on increasing the clamping force.
■Gripping range of each collect is 0.25mm.

DSK-COLLET

DSK Precision Collet
DSK精密彈性筒夾



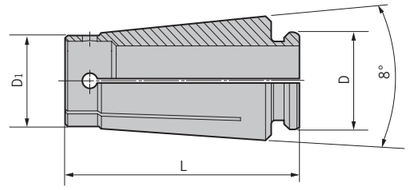

DSK6		DSK10		DSK16		DSK20		DSK25	
	11PCS		18PCS		27PCS		34PCS		45PCS
SET NO.	RANGEmm	SET NO.	RANGEmm	SET NO.	RANGEmm	SET NO.	RANGEmm	SET NO.	RANGEmm
DSK6-2	1.8-2.0	DSK10-2	1.75-2.0	DSK16-3	2.75-3.0	DSK20-3.5	3.0-3.5	DSK25-3.5	3.0-3.5
2.5	2.3-2.5	3	2.75-3.0	3.5	3.0-3.5	4	3.5-4.0	4	3.5-4.0
3	2.8-3.0	3.5	3.0-3.5	4	3.5-4.0	4.5	4.0-4.5	4.5	4.0-4.5
3.5	3.0-3.5	4	3.5-4.0	4.5	4.0-4.5	5	4.5-5.0	5	4.5-5.0
4	3.5-4.0	4.5	4.0-4.5	5	4.5-5.0	5.5	5.0-5.5	5.5	5.0-5.5
4.5	4.0-4.5	5	4.5-5.0	5.5	5.0-5.5	6	5.5-6.0	6	5.5-6.0
5	4.5-5.0	5.5	5.0-5.5	6	5.5-6.0	6.5	6.0-6.5	6.5	6.0-6.5
5.5	5.0-5.5	6	5.5-6.0	6.5	6.0-6.5	7	6.5-7.0	7	6.5-7.0
6	5.5-6.0	6.5	6.0-6.5	7	6.5-7.0	7.5	7.0-7.5	7.5	7.0-7.5
		7	6.5-7.0	7.5	7.0-7.5	8	7.5-8.0	8	7.5-8.0
		7.5	7.0-7.5	8	7.5-8.0	8.5	8.0-8.5	8.5	8.0-8.5
		8	7.5-8.0	8.5	8.0-8.5	9	8.5-9.0	9	8.5-9.0
		8.5	8.0-8.5	9	8.5-9.0	9.5	9.0-9.5	9.5	9.0-9.5
		9	8.5-9.0	9.5	9.0-9.5	10	9.5-10.0	10	9.5-10.0
		9.5	9.0-9.5	10	9.5-10.0	10.5	10.0-10.5	10.5	10.0-10.5
		10	9.5-10.0	10.5	10.0-10.5	11	10.5-11.0	11	10.5-11.0
				11	10.5-11.0	11.5	11.0-11.5	11.5	11.0-11.5
				11.5	11.0-11.5	12	11.5-12.0	12	11.5-12.0
				12	11.5-12.0	12.5	12.0-12.5	12.5	12.0-12.5
				12.5	12.0-12.5	13	12.5-13.0	13	12.5-13.0
				13	12.5-13.0	13.5	13.0-13.5	13.5	13.0-13.5
				13.5	13.0-13.5	14	13.5-14.0	14	13.5-14.0
				14	13.5-14.0	14.5	14.0-14.5	14.5	14.0-14.5
				14.5	14.0-14.5	15	14.5-15.0	15	14.5-15.0
				15	14.5-15.0	15.5	15.0-15.5	15.5	15.0-15.5
				15.5	15.0-15.5	16	15.5-16.0	16	15.5-16.0
				16	15.5-16.0	16.5	16.0-16.5	16.5	16.0-16.5
						17	16.5-17.0	17	16.5-17.0
						17.5	17.0-17.5	17.5	17.0-17.5
						18	17.5-18.0	18	17.5-18.0
						18.5	18.0-18.5	18.5	18.0-18.5
						19	18.5-19.0	19	18.5-19.0
						19.5	19.0-19.5	19.5	19.0-19.5
						20	19.5-20.0	20	19.5-20.0
								20.5	20.0-20.5
								21	20.5-21.0
								21.5	21.0-21.5
								22	21.5-22.0
								22.5	22.0-22.5
								23	22.5-23.0
								23.5	23.0-23.5
								24	23.5-24.0
								24.5	24.0-24.5
								25	24.5-25.0
								25.4	25.0-25.4

型號 Specification		D	D1	L
DSK	6	9	7.5	25
	10	13	11.9	30.5
	16	20.3	18.7	45
	20	24	23	50
	25	29.3	28.7	57

彈性筒夾等級說明 / Spring Collet Precision

■普通級：小于等于0.015mm■A級：小于等于0.01mm■UP級：小于等于0.005mm
■Standard: ≤0.015 mm■A: ≤0.01 mm■UP: ≤0.005 mm

備注：此說明適合于SK筒夾、ER筒夾、SC直筒夾。
Remark:This precision is applied to SK collet\ER collet\SC Straight Collet .

ER/SC-COLLET

ER Collet
ER彈性筒夾





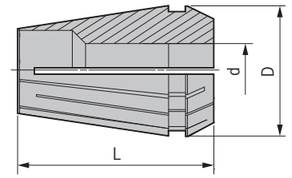

型號 Specification		D	L
ER	11	11.5	18
	16	17	27.5
	20	21	31.5
	25	26	34
	32	33	40
	40	41	46

型號 Specification		ER11-13PCS		ER16-10PCS		ER20-12PCS		ER25-15PCS		ER32-19PCS		ER40-24PCS	
		SET NO.	RANGEmm	SET NO.	RANGEmm	SET NO.	RANGEmm	SET NO.	RANGEmm	SET NO.	RANGEmm	SET NO.	RANGEmm
ER	11-	1	1.0-0.5	16-	1	1.0-0.5	20-	2	2.0-1.0	25-	2	2.0-1.0	32-	2	2.0-1.0	40-	3	3.0-2.0
		1.5	1.5-1.0		2	2.0-1.0		3	3.0-2.0		3	3.0-2.0		3	3.0-2.0		4	4.0-3.0
		2	2.0-1.5		3	3.0-2.0		4	4.0-3.0		4	4.0-3.0		4	4.0-3.0		5	5.0-4.0
		2.5	2.5-2.0		4	4.0-3.0		5	5.0-4.0		5	5.0-4.0		5	5.0-4.0		6	6.0-5.0
		3	3.0-2.5		5	5.0-4.0		6	6.0-5.0		6	6.0-5.0		6	6.0-5.0		7	7.0-6.0
		3.5	3.5-3.0		6	6.0-5.0		7	7.0-6.0		7	7.0-6.0		7	7.0-6.0		8	8.0-7.0
		4	4.0-3.5		7	7.0-6.0		8	8.0-7.0		8	8.0-7.0		8	8.0-7.0		9	9.0-8.0
		4.5	4.5-4.0		8	8.0-7.0		9	9.0-8.0		9	9.0-8.0		9	9.0-8.0		10	10-9.0
		5	5.0-4.5		9	9.0-8.0		10	10-9.0		10	10-9.0		10	10-9.0		11	11-10
		5.5	5.5-5.0		10	10-9.0		11	11-10		11	11-10		11	11-10		12	12-11
		6	6.0-5.5					12	12-11		12	12-11		12	12-11		13	13-12
		6.5	6.5-6.0					13	13-12		13	13-12		13	13-12		14	14-13
		7	7.0-6.5								14	14-13		14	14-13		15	15-14
											15	15-14		15	15-14		16	16-15
											16	16-15		16	16-15		17	17-16
														17	17-16		18	18-17
														18	18-17		19	19-18
														19	19-18		20	20-19
														20	20-19		21	21-20
																	22	22-21
																	23	23-22
																	24	24-23
																	25	25-24
																	26	26-25

注：ER11-13PCS爲套裝形式，另有止水型ER筒夾可選配。 例：ER32-16C
Note: ER Collet with internal cooling is available. Example: ER32-16C

ER/SC

ER Tapping Collet
ER攻絲刀柄

NEW



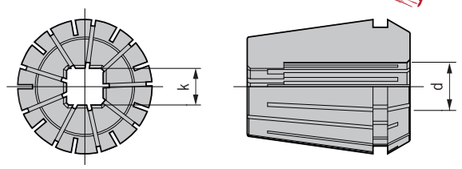

型號 Specification		d	k	備注通用Taps ISO529(1)	ISO529(2)	JIS	DIN376
ER16-	063050G	6.3	5	M8	M6	-	-
	070055G	7	5.5	-	-	M10;W3/8	M10
	080063G	8	6.3	M10	M8	-	-
	085065G	8.5	6.5	-	-	M12	-
	090071G	9	7.1	M12	-	-	-
ER20-	063050G	6.3	5	M8	M6	-	-
	070055G	7	5.5	-	-	M10;W3/8	M10
	080063G	8	6.3	M10	M8	-	-
	085065G	8.5	6.5	-	-	M12	-
	090071G	9	7.1	M12	-	-	-
ER32-	063050G	6.3	5	M8	M6	-	-
	070055G	7	5.5	-	-	M10;W3/8	M10
	080063G	8	6.3	M10	M8	-	-
	085065G	8.5	6.5	-	-	M12	-
	090071G	9	7.1	M12	-	-	-
	120090G	12	9	-	-	W5/8	M16
	125100G	12.5	10	M16	-	M16	-
	140112G	14	11.2	M18;M20	-	-	-
	150120G	15	12	-	-	M20	-
	160120G	16	12	-	-	-	M20

注：1安裝絲錐時柄方必須伸入筒夾方槽內部 2選型前需確認絲錐柄徑與四方尺寸。
Note: ER Collet with internal cooling is available. Example: ER32-16C

SC Straight Collet
SC强力彈性直筒夾



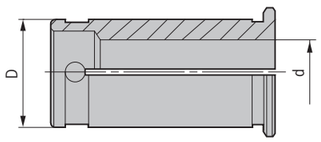

型號 Specification	D	d	特殊規格 (d)
SC16- 3	16	3	-
4	16	4	-
5	16	5	-
6	16	6	-
7	16	7	-
8	16	8	-
9	16	9	-
10	16	10	-
11	16	11	-
12	16	12	-

型號 Specification	D	d	特殊規格 (d)
SC20- 6	20	6	-
8	20	8	-
10	20	10	-
12	20	12	-
16	20	16	15

型號 Specification	D	d	特殊規格 (d)
SC32- 6	32	6	-
8	32	8	-
10	32	10	-
12	32	12	-
16	32	16	15
20	32	20	19
25	32	25	24

型號 Specification	D	d	特殊規格 (d)
SC42- 6	42	6	-
8	42	8	-
10	42	10	-
12	42	12	-
16	42	16	15
20	42	20	19
25	42	25	24
32	42	32	31

DHC/ODHC

Hydraulic Collet - Flange Cooling
D型端面出水液壓刀柄轉換筒夾

NEW



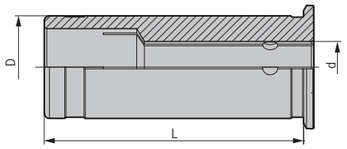

型號 Specification	d	D	L
DHC12- 3	3	12	45
4	4	12	45
5	5	12	45
6	6	12	45
8	8	12	45

型號 Specification	d	D	L
DHC20- 3	3	20	50.5
4	4	20	50.5
5	5	20	50.5
6	6	20	50.5
8	8	20	50.5
10	10	20	50.5
12	12	20	50.5
14	14	20	50.5
16	16	20	50.5

型號 Specification	d	D	L
DHC32- 6	6	32	60.5
8	8	32	60.5
10	10	32	60.5
12	12	32	60.5
14	14	32	60.5
16	16	32	60.5
18	18	32	60.5
20	20	32	60.5
25	25	32	60.5

Hydraulic Collet - Internal Cooling
OD型中心出水液壓刀柄轉換筒夾

NEW



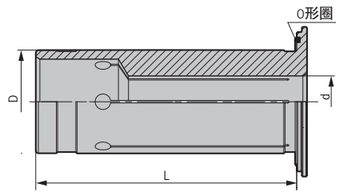

型號 Specification	d	D	L
ODHC12- 3	3	12	45
4	4	12	45
5	5	12	45
6	6	12	45
8	8	12	45

型號 Specification	d	D1	L
ODHC20- 3	3	20	50.5
4	4	20	50.5
5	5	20	50.5
6	6	20	50.5
8	8	20	50.5
10	10	20	50.5
12	12	20	50.5
14	14	20	50.5
16	16	20	50.5

型號 Specification	d	D	L
ODHC32- 6	6	32	60.5
8	8	32	60.5
10	10	32	60.5
12	12	32	60.5
14	14	32	60.5
16	16	32	60.5
18	18	32	60.5
20	20	32	60.5
25	25	32	60.5

TPE

TPE312 Tapping Collet
TPE312 絲錐筒夾

NEW



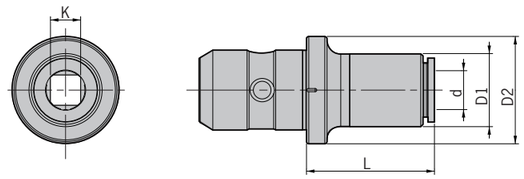

型號 Specification		d	k	D1	D2	備注通用Taps ISO529(1)	ISO529(2)	JIS	DIN371	DIN376
TPE312-	028021-L	2.8	2.1	20	31	-	-	-	-	M4
	0315025-L	3.15	2.5	20	31	M4	M3	-	-	-
	035027-L	3.5	2.7	20	31	-	-	-	M3	M5
	0400315-L	4	3.15	20	31	M5	M4	-	-	-
	040032-L	4	3.2	20	31	-	-	M3; W1/8	-	-
	045034-L	4.5	3.4	20	31	-	-	-	M4	M6
	0450355-L	4.5	3.55	20	31	M6	-	-	-	-
	050040-L	5	4	20	31	-	M5	M4	-	-
	055045-L	5.5	4.5	20	31	-	-	M5; W3/16	-	-
	060045-L	6	4.5	20	31	-	-	M6; W1/4	-	-
	060049-L	6	4.9	20	31	-	-	-	M5 M6	M8
	061050-L	6.1	5	20	31	-	-	W5/16; W5/16	-	-
	062050-L	6.2	5	20	31	-	-	M8	-	-
	063050-L	6.3	5	20	31	M8	M6	-	-	-
	070055-L	7	5.5	20	31	-	-	M10; W3/8	-	M10
	080060-L	8	6	20	31	-	-	W7/16; PT1/8	-	-
	080062-L	8	6.2	20	31	-	-	-	M8	-
	080063-L	8	6.3	20	31	M10	M8	-	-	-
	085065-L	8.5	6.5	20	31	-	-	M12	-	-
	090070-L	9	7	27	31	-	-	W1/2	-	M12
	090071-L	9	7.1	27	31	M12	-	-	-	-
	100080-L	10	8	27	31	-	M10	-	M10	-

TPE312絲錐筒夾長度 Length of Tapping Collet					
L	L+47	L+77	L+107*	L+137*	L+167*
33	80	110	140	170	200

注：ISO529（1）爲細柄普通粗牙螺紋絲錐；
ISO529（2）爲粗柄普通粗牙螺紋絲錐。
其中“d”，“k”尺寸爲標準絲錐柄部參考數據。
TPE絲錐筒夾分別有六款長度可選，帶*規格需下單制作。例：TPE312-028021-110
Note: Please note the length of the tapping collet when you order. For example: TPE312-028021-110

特 點 / Feature

■有内冷却供給；
■絲錐的快速更換；
■符合ISO/JIS/DIN標準的絲錐TPE筒夾可用；
■注意硬質合金絲錐會削弱夾緊力且容易比絲錐筒夾中脱落；
■TPE筒夾無扭力保護；
■請參照絲錐尺寸表；
■TPE筒夾與TPG刀柄組合使用。

■With cooling supply;
■Quick change;
■For taps with standard ISO,JIS and DIN;
■Solid carbide taps will drop off easily;
■With torgue protection;
■Please refer taps chart;
■TPE tapping collet is for TPG tapping chuck.

TPE

TPE1024 Tapping Collet
TPE1024 絲錐筒夾

NEW



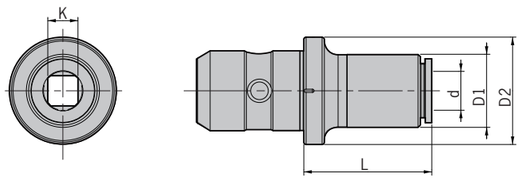

型號 Specification		d	k	D1	D2	備注通用Taps ISO529(1)	JIS	DIN371	DIN376
TPE1024-	080060-L	8	6	20	47	-	W7/16; PT1/8	-	-
	080863-L	8	6.3	20	47	M10	-	-	-
	085065-L	8.5	6.5	20	47	-	M12	-	-
	090070-L	9	7	27	47	-	W1/2	-	M12
	090071-L	9	7.1	27	47	M12	-	-	-
	100080-L	10	8	27	47	-	-	M10	-
	105080-L	10.5	8	27	47	-	M14	-	-
	110090-L	11	9	27	47	-	PT1/4	-	M14
	112090-L	11.2	9	27	47	M14	-	-	-
	120090-L	12	9	27	47	-	W5/8	-	M16
	125100-L	12.5	10	27	47	M16	M16	-	-
	140110-L	14	11	32	47	-	M18; W3/4; PT3/8	-	M18
	140112-L	14	11.2	32	47	M18 M20	-	-	-
	150120-L	15	12	32	47	-	M20	-	-
	160120-L	16	12	32	47	-	-	-	M20
	160125-L	16	12.5	32	47	M22	-	-	-
	170130-L	17	13	32	47	-	M22; W7/8	-	-
	180140-L	18	14	36	47	M24	PT1/2	-	-
	180145-L	18	14.5	36	47	-	-	-	M22; M24
	190150-L	19	15	36	47	-	M24	-	-

TPE312絲錐筒夾長度 Length of Tapping Collet					
L	L+45	L+75	L+105	L+135*	L+165*
55	100	130	160	190*	220

注：ISO529（1）爲細柄普通粗牙螺紋絲錐；
ISO529（2）爲粗柄普通粗牙螺紋絲錐。
其中“d”，“k”尺寸爲標準絲錐柄部參考數據。
TPE絲錐筒夾分別有六款長度可選，帶*規格需下單制作。例：TPE1024-080060-100
Note: Please note the length of the tapping collet when you order. For example: TPE1024-080060-100

特 點 / Feature

■有内冷却供給；
■絲錐的快速更換；
■符合ISO/JIS/DIN標準的絲錐TPE筒夾可用；
■注意硬質合金絲錐會削弱夾緊力且容易比絲錐筒夾中脱落；
■TPE筒夾無扭力保護；
■請參照絲錐尺寸表；
■TPE筒夾與TPG刀柄組合使用。

■With cooling supply;
■Quick change;
■For taps with standard ISO,JIS and DIN;
■Solid carbide taps will drop off easily;
■With torgue protection;
■Please refer taps chart;
■TPE tapping collet is for TPG tapping chuck.

TPD

TPD316 Tapping Collet
TPD316 絲錐筒夾





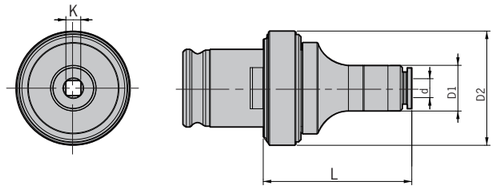

型號 Specification		d	k	D1	D2	備注通用Taps ISO529(1)	ISO529(2)	JIS	DIN371	DIN376
TPD316-	028021-L	2.8	2.1	20	33	-	-	-	-	M4
	0315025-L	3.15	2.5	20	33	M4	M3	-	-	-
	035027-L	3.5	2.7	20	33	-	-	-	M3	M5
	0400315-L	4	3.15	20	33	M5	M4	-	-	-
	040032-L	4	3.2	20	33	-	-	M3; W1/8	-	-
	045034-L	4.5	3.4	20	33	-	-	-	M4	M6
	0450355-L	4.5	3.55	20	33	M6	-	-	-	-
	050040-L	5	4	20	33	-	M5	M4	-	-
	055045-L	5.5	4.5	20	33	-	-	M5; W3/16	-	-
	060045-L	6	4.5	20	33	-	-	M6; W1/4	-	-
	060049-L	6	4.9	20	33	-	-	-	M5 M6	M8
	061050-L	6.1	5	20	33	-	-	W5/16	-	-
	062050-L	6.2	5	20	33	-	-	M8	-	-
	063050-L	6.3	5	20	33	M8	M6	-	-	-
	070055-L	7	5.5	20	33	-	-	M10; W3/8	-	M10
	080060-L	8	6	20	33	-	-	W7/16; PT1/8	-	-
	080062-L	8	6.2	20	33	-	-	-	M8	-
	080063-L	8	6.3	20	33	M10	M8	-	-	-
	085065-L	8.5	6.5	20	33	-	-	M12	-	-
	090070-L	9	7	27	33	-	-	W1/2	-	M12
	090071-L	9	7.1	27	33	M12	-	-	-	-
	100080-L	10	8	27	33	-	M10	-	M10	-
	105080-L	10.5	8	27	33	-	-	M14	-	-
	110090-L	11	9	27	33	-	-	PT1/4	-	M14
	112090-L	11.2	9	27	33	M14	-	-	-	-
	120090-L	12	9	27	33	-	-	W5/8	-	M16
	125100-L	12.5	10	27	33	M16	-	M16	-	-

TPD絲錐筒夾長度 Length of Tapping Collet		
L	L+60	L+100
45	105	145

注：ISO529（1）爲細柄普通粗牙螺紋絲錐；
ISO529（2）爲粗柄普通粗牙螺紋絲錐。
其中“d”，“k”尺寸爲標準絲錐柄部參考數據。
TPD316絲錐筒夾分別有三款長度可選。例：TPD316-028021-105
Note: Please note the length of the tapping collet when you order. For example: TPD316-028021-105

TPD

TPD830 Tapping Collet
TPD830 絲錐筒夾





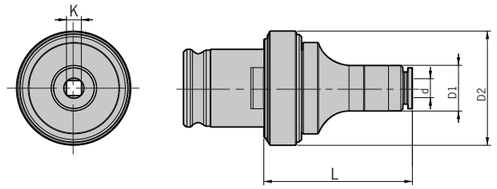

型號 Specification		d	k	D1	D2	備注通用Taps ISO529(1)	JIS	DIN371	DIN376
TPD830-	060049-L	6	4.9	20	50	-	-	-	M8
	061050-L	6.1	5	20	50	-	W5/16	-	-
	062050-L	6.2	5	20	50	-	M8	-	-
	063050-L	6.3	5	20	50	M8	-	-	-
	070055-L	7	5.5	20	50	-	M10; W3/8	-	M10
	080060-L	8	6	20	50	-	W7/16; PT1/8	-	-
	080062-L	8	6.2	20	50	-	-	M8	-
	080063-L	8	6.3	20	50	M10	-	--	-
	085065-L	8.5	6.5	20	50	-	M12	-	-
	090070-L	9	7	27	50	-	W1/2	-	M12
	090071-L	9	7.1	27	50	M12	-	-	-
	100080-L	10	8	27	50	-	-	M10	-
	105080-L	10.5	8	27	50	-	M14	-	-
	110090-L	11	9	27	50	-	PT1/4	-	M14
	112090-L	11.2	9	27	50	M14	-	-	-
	120090-L	12	9	27	50	-	W5/8	-	M16
	125100-L	12.5	10	27	50	M16	M16	-	-
	140110-L	14	11	32	50	-	M18; W3/4; PT3/8	-	M18
	140112-L	14	11.2	32	50	M18; M20	-	-	-
	150120-L	15	12	32	50	-	M20	-	-
	160120-L	16	12	32	50	-	-	-	M20
	160125-L	16	12.5	32	50	M22	-	-	-
	170130-L	17	13	32	50	-	M22; W7/8	-	-
	180140-L	18	14	36	50	M24	PT1/2	-	-
	180145-L	18	14.5	36	50	-	-	-	M22; M24
	190150-L	19	15	36	50	-	M24	-	-
	200150-L	20	15	36	50	-	M27; W1 PT5/8	-	-
	200160-L	20	16	36	50	M27; M30	-	-	M27
	220180-L	22	18	36	50	-	-	-	M30
	230170-L	23	17	36	50	-	M30; PT3/4	-	-

TPD絲錐筒夾長度 Length of Tapping Collet		
L	L+60	L+100
65	125	165

注：ISO529（1）爲細柄普通粗牙螺紋絲錐；
ISO529（2）爲粗柄普通粗牙螺紋絲錐。
其中“d”，“k”尺寸爲標準絲錐柄部參考數據。
TPD830絲錐筒夾分別有三款長度可選。例：TPD830-060049-125
Note: Please note the length of the tapping collet when you order. For example: TPD830-060049-125

DSK-J/GSK-J/GSK-NUT

J-Nut for High Speed Tool Holder
高速刀柄J型螺帽

NEW



J型螺帽型號 J-nut DSK	J型螺帽型號 J-nut GSK	中心出水密封蓋型號 Nut Seal (Internal Cooling)	扳手型號 Wrench
DSK6-J	GSK6-J	MSK6-C3、3.3、4、4.2、5、6	WMSK6
DSK10-J	GSK10-J	MSK10-C3、4、4.5、5、5.5、6、6.2、6.5、6.8、7、8、8.5、10	WMSK10
DSK16-J	GSK16-J	MSK16-C7、8、8.5、10、10.3、11、11.5、12、12.5、13.5、14、15、16	WMSK16
DSK20-J	GSK20-J	MSK20-C8、10、12、16、17.5、20	WMSK20
DSK25-J	GSK25-J	MSK25-C8、10、12、16、17、17.5、18、20、25	WMSK25

J型螺帽型號 J-nut DSK	J型螺帽型號 J-nut GSK	端面出水密封蓋型號 Nut Seal(Flange Cooling)	扳手型號 Wrench
DSK6-J	GSK6-J	MSK6-D3、3.3、4、4.2、5、6	WMSK6
DSK10-J	GSK10-J	MSK10-D3、4、4.5、5、5.5、6、6.2、6.5、6.8、7、8、8.5、10	WMSK10
DSK16-J	GSK16-J	MSK16-D7、8、8.5、10、10.3、11、11.5、12、12.5、13.5、14、15、16	WMSK16
DSK20-J	GSK20-J	MSK20-D8、10、12、16、17.5、20	WMSK20
DSK25-J	GSK25-J	MSK25-D8、10、12、16、17、17.5、18、20、25	WMSK25

Clamping Nuts For GSK Collet Chuck
GSK高速刀柄專用螺帽



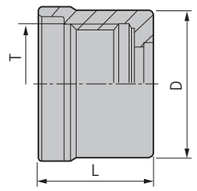

型號 Specification		D	L	T
GSK	6	19.5	21	M15.5x1.0P
	10	27	24	M21.5x1.0P
	16	40	31	M32x1.5P
	20	48	33	M40x1.0P
	25	55	37	M45x1.5P

DSK/ER-NUT

Clamping Nuts For DSK Collet Chuck
DSK高速刀柄專用螺帽



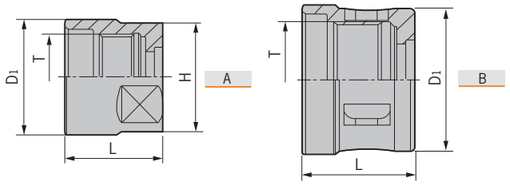

型號 Specification		圖示 Figure	D1	H	L	T
DSK	6-A	A	20	18	21	M15.5x1.0P
	10-A	A	27.5	25	24	M21.5x1.0P
	16-M	B	40.5	-	31	M32x1.5P
	20-M	B	48	-	33	M40x1.0P
	25-M	B	55	-	37	M45x1.5P

Clamping Nut For ER Collet Chuck
ER夾頭螺帽



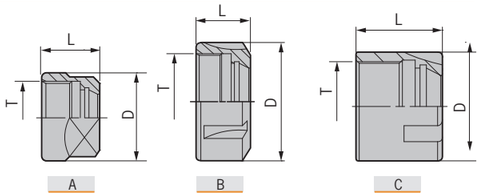

型號 Specification		圖示 Figure	D	L	T
CNA-	ER16	A	28	17.5	M22XP1.5
	ER20	A	34	19	M25XP1.5
CNU-	M/RD-ER25	B	42	20	M32XP1.5
	M/RD-ER32	B	50	22.5	M40XP1.5
	M/RD-ER40	B	63	25.5	M50XP1.5
CNM-	ER11	C	16	12	M13XP0.75
	ER16	C	23	18	M19XP1.0
	ER20	C	28	19	M24XP1.0
	ER25	C	35	20	M30XP1.0

ER/SC-COLLET

Seal Ring For ER Clamping Nut
ER螺帽止水環



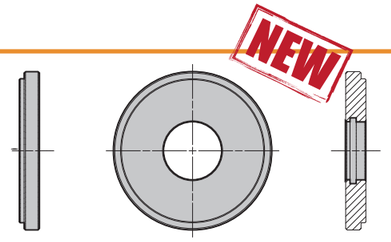

型號 Specification

MER16		MER20		MER25		MER32		MER40	
SET NO.	RANGEmm	SET NO.	RANGEmm	SET NO.	RANGEmm	SET NO.	RANGEmm	SET NO.	RANGEmm
MER16- C3.5	3.5	MER20- C3.5	3.5	MER25- C3.5	3.5	MER32- C3.5	3.5	MER40- C3.5	3.5
C4	4	C4	4	C4	4	C4	4	C4	4
C4.5	4.5	C4.5	4.5	C4.5	4.5	C4.5	4.5	C4.5	4.5
C5	5	C5	5	C5	5	C5	5	C5	5
C5.5	5.5	C5.5	5.5	C5.5	5.5	C5.5	5.5	C5.5	5.5
C6	6	C6	6	C6	6	C6	6	C6	6
C6.5	6.5	C6.5	6.5	C6.5	6.5	C6.5	6.5	C6.5	6.5
C7	7	C7	7	C7	7	C7	7	C7	7
C7.5	7.5	C7.5	7.5	C7.5	7.5	C7.5	7.5	C7.5	7.5
C8	8	C8	8	C8	8	C8	8	C8	8
C8.5	8.5	C8.5	8.5	C8.5	8.5	C8.5	8.5	C8.5	8.5
C9	9	C9	9	C9	9	C9	9	C9	9
C9.5	9.5	C9.5	9.5	C9.5	9.5	C9.5	9.5	C9.5	9.5
C10	10	C10	10	C10	10	C10	10	C10	10
		C10.5	10.5	C10.5	10.5	C10.5	10.5	C10.5	10.5
		C11	11	C11	11	C11	11	C11	11
		C11.5	11.5	C11.5	11.5	C11.5	11.5	C11.5	11.5
		C12	12	C12	12	C12	12	C12	12
		C12.5	12.5	C12.5	12.5	C12.5	12.5	C12.5	12.5
		C13	13	C13	13	C13	13	C13	13
				C13.5	13.5	C13.5	13.5	C13.5	13.5
				C14	14	C14	14	C14	14
				C14.5	14.5	C14.5	14.5	C14.5	14.5
				C15	15	C15	15	C15	15
				C15.5	15.5	C15.5	15.5	C15.5	15.5
				C16	16	C16	16	C16	16
						C16.5	16.5	C16.5	16.5
						C17	17	C17	17
						C17.5	17.5	C17.5	17.5
						C18	18	C18	18
						C18.5	18.5	C18.5	18.5
						C19	19	C19	19
						C19.5	19.5	C19.5	19.5
						C20.5	20.5	C20	20
								C20.5	20.5
								C21	21
								C21.5	21.5
								C22	22
								C22.5	22.5
								C23	23
								C23.5	23.5
								C24	24
								C24.5	24.5
								C25	25
								C25.5	25.5
								C26	26



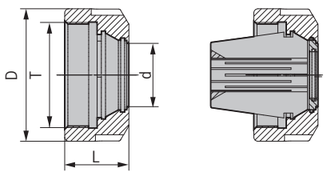

型號 Specification		D	d	L	T
ER	16-J	28	11.1	22.5	M22x1.5-6H
	20-J	34	14.1	26	M25x1.5-6H
	25-J	42	19.1	25.5	M32x1.5-6H
	32-J	50	24.1	27.5	M40x1.5-6H
	40-J	63	30.1	30.5	M50x1.5-6H

TSK/ER/WHPM-WRENCH

Wrench For GSK Tool Holder
GSK套筒專用扳手



型號 Specification		適用螺帽 Clamping nut	重量 Weight
WGSK	6	GSK6	0.30
	10	GSK10	0.35
	16	GSK16	0.40
	20	GSK20	0.50
	25	GSK25	0.55

Wrench For DSK Tool Holder
DSK專用扳手



型號 Specification		適用螺帽 Clamping nut	重量 Weight
TSK	6-A	DSK6	0.10
	10-A	DSK10	0.10
	16-M	DSK16	0.20
	20-M	DSK20	0.30
	25-M	DSK25	0.40

Wrench For ER Tool Holder
ER專用扳手



型號 Specification	適用螺帽 Clamping nut	重量 Weight
ER 16-A	CNA-ER16	0.10
20-A	CNA-ER20	0.10
11-M	CNM-ER11	0.20
16-M	CNM-ER16	0.20
20-M	CNM-ER20	0.20
25-M	CNM-ER25	0.20
25-UM.KM/RD	CNU-ER25	0.20
32-UM.KM/RD	CNU-ER32	0.20
40-UM.KM/RD	CNU-ER40	0.30

Wrench For Milling Chuck HPM
HPM强力彈性套筒專用扳手



型號 Specification		適用本體 Tool holder	重量 Weight
WHPM	16	HPM16	0.40
	20	HPM20	0.50
	32	HPM32	0.60

MLC/SPU/WTPD/WMSK-WRENCH

Wrench For Tool Holder MLC/HPC
MLC强力筒夾本體專用扳手



型號 Specification	適用本體 Tool holder	重量 Weight
SP-MLC 20	MLC20/HPC20	0.20
32	MLC32/HPC32	0.30
42	MLC42/HPC42	0.45

Wrench For Drill Chuck SPU
SPU鑽夾頭專用扳手



型號 Specification	適用本體 Tool holder	重量 Weight
SP-SPU 8	SPU8	0.10
13	SPU13	0.12
16	SPU16	0.12

Wrench For TPD Tapping Collet
TPD絲錐筒夾扳手



型號 Specification	適用本體 Tool holder	重量 Weight
WTPD 316	TPD316	0.10
830	TPD830	0.12

Wrench For MSK Nuts Seal
MSK密封蓋專用扳手



型號 Specification	適用密封蓋 Nut Seal	重量 Weight
WMSK 6	MSK6	0.10
10	MSK10	0.10
16	MSK16	0.20
20	MSK20	0.20

Wrench For DC Extender
DC延長杆專用扳手



型號 Specification	適用本體 Tool holder	重量 Weight
WDC	DC	0.10

BT/SK-PULL STUD

BT Pull Stud Without Hole
BT螺栓拉頭



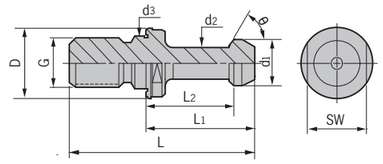

型號 Specification	D	d1	d2	d3	L1	L2	L	θ	G	SW	重量 Weight
BT30- 45	16.5	11	7	12.5	23	18	43	45°	M12	13	0.03
60	16.5	11	7	12.5	23	18	43	60°	M12	13	0.03
BT40- 45	23	15	10	17	35	28	60	45°	M16	19	0.07
60	23	15	10	17	35	28	60	60°	M16	19	0.07
90	23	15	10	17	35	28	60	90°	M16	19	0.07
BT50- 45	38	23	17	25	45	35	85	45°	M24	30	0.25
60	38	23	17	25	45	35	85	60°	M24	30	0.25
90	38	23	17	25	45	35	85	90°	M24	30	0.25

BT Pull Stud With Cooling Hole
BT螺栓出水拉頭



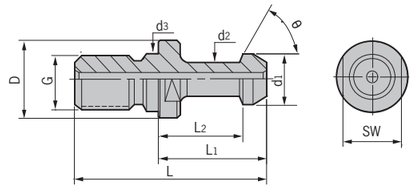

型號 Specification	給水孔徑 Coolant dia.	D	d1	d2	d3	L1	L2	L	θ	G	SW	重量 Weight
BT40- 45C	4	23	15	10	17	35	28	60	45°	M16	19	0.07
60C	4	23	15	10	17	35	28	60	60°	M16	19	0.07
90C	4	23	15	10	17	35	28	60	90°	M16	19	0.07
BT50- 45C	6	38	23	17	25	45	35	85	45°	M24	30	0.25
60C	6	38	23	17	25	45	35	85	60°	M24	30	0.25
90C	6	38	23	17	25	45	35	85	90°	M24	30	0.25

SK Pull Stud With Cooling Hole
SK螺栓拉頭



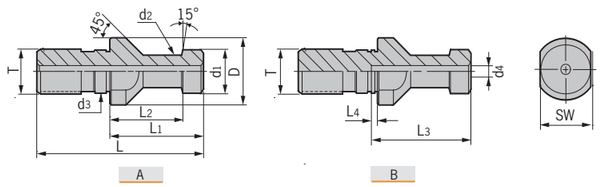

型號 Specification	圖示 Figure	D	d1	d2	d3	d4	L1	L2	L3	L4	L	SW	T	重量 Weight
SK- 30A	A	17	13	9	13	-	24	19	24	-	44	14	M12	0.03
40A	A	23	19	14	17	7	26	20	26	3.0	54	19	M16	0.05
50A	A	36	28	21	25	11.5	34	25	34	4.5	74	30	M24	0.30
SK- 40B	B	23	19	14	17	7	26	20	27	3.0	54	19	M16	0.05
50B	B	36	28	21	25	11.5	34	25	37	4.5	74	30	M24	0.30

MAZAK/DIN2080/MTB-PULL STUD

MAZAK Pull Stud
MAZAK螺栓拉頭



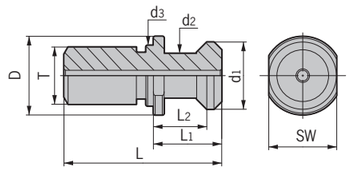

型號 Specification		D	d1	d2	d3	L	L1	L2	SW	T	重量 Weight
MAZAK-	40	22	18.8	12.45	17	44.1	19.1	14	19	M16	0.02
	50	37	28.96	20.83	25	65.2	25.2	25.55	30	M24	0.10

DIN2080 Pull Stud
DIN2080螺栓拉頭



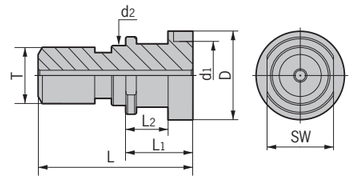

型號 Specification		D	d1	d2	L	L1	L2	SW	T	重量 Weight
DIN2080-	40	25	21.1	17	53	25	13.6	19	M16	0.06
	50	39.3	32	25	65	25	13.35	30	M24	0.30

MTB Tension Screw
MTB拉緊拉頭



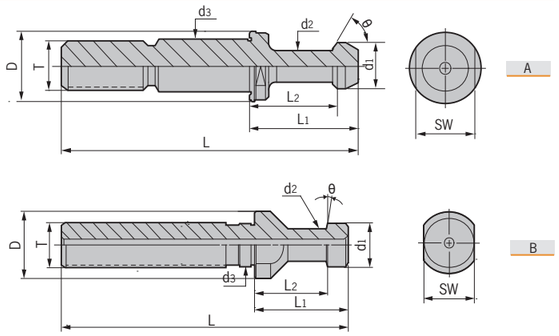

型號 Specification		圖示 Figure	D	d1	d2	d3	L1	L2	L	θ	G	SW	重量 Weight
BT30-	45-MT2	A	16.5	11	7	12	23	18	105	45°	M10	13	0.07
BT40-	45-MT3	A	23	15	10	17	35	28	110	45°	M12	19	0.10
	45-MT4	A	23	15	10	17	35	28	110	45°	M16	19	0.10
BT50-	45-MT5	A	38	23	17	25	45	35	165	45°	M20	30	0.65
SK30-	15-MT2	B	17	13	9	13	24	19	105	15°	M10	14	0.07
SK40-	15-MT3	B	23	19	14	17	26	20	100	15°	M12	19	0.10
	15-MT4	B	23	19	14	17	26	20	100	15°	M16	19	0.10
SK50-	15-MT5	B	36	28	21	25	34	25	145	15°	M20	30	0.65

Shrink-Fit Principle
電磁誘導加熱原理（熱脹冷縮）

快速加熱原理 / Heating

由加熱器內之感應綫圈，產生高頻電磁波使刀杆感應電流而快速加熱，使刀柄內孔擴張，提升換刀效率。
When the induction coils works with electricity, the shank of the tool holderwhich placed in the coils heating system, is heated and expands.

冷卻原理 / Cooling

利用空壓機之强制降温冷却，使刀杆能迅速到達常温狀態。（冷却時間與空壓機馬力大小成正比）
Cooling with compressed air to room temperature. (Cooling time is inversely proportional to the power of air compressor)

例：BT40–SF12–90



加熱20–24秒
Heating Time:20-24″

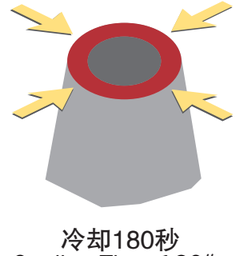

冷却180秒
Cooling Time:180″

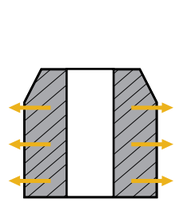

加熱
Heating

將刀具置加熱器內加熱，
時間約20–24秒
Place tool holder in heating
machine 20-24s for heating

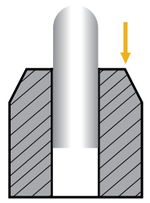

置入刀具
Inserting

將刀具置入加熱膨
脹後的刀柄
Insert the cutter
to the expanded holder

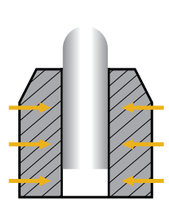

固定夾持
Cooling

温度冷却收縮後的刀柄，
可穩固夾持刀具
Cool the holder
and hold the cutter

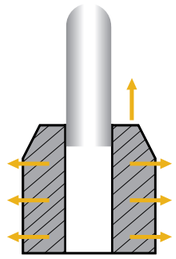

取出
Removing

刀柄在加熱膨脹後，
可輕易取出刀具
Heat the holder
and remove the cutter

操作便利安全 / User–Friendly With High Security

刀杆被加熱至換刀温度後，約五秒後自動開啓送風裝置冷却刀杆，不必移動加熱器，提高操作之安全性。
When the holder is heated to the temperature to remove the cutter, the cooling system will be switched on automatically.
No bothering to remove the heater.

SF-MACHINE

Heating Machine
電磁誘導加熱

熱縮機所需 / Machine Requirements

- 電力供應
- Electrical supply
- 空氣供應
- Air supply

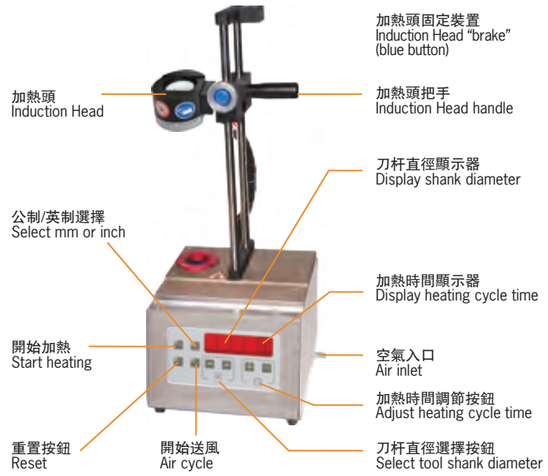

型號 Specification	加熱時間 Shrinktime	冷却方式 Coolingofinductor	輸出電源 Voltage	瞬間輸出最大功率 Power	適用刀具材質 Tools	範圍 Range	LxWxH (mm)	重量 Weight
SF-300	20-24"	風冷 Air Cooling	SINGLE-PHASE 220V 50/60HZ 15AMP	2000~3000W	鎢鋼 Carbide	Φ3 - 20 mm 標配 Φ18 - 32 mm 選配	300x300x685	20KG

Tool Holder Adapter
變徑刀柄座

型號 Specification
HSK 40-SF
50-SF
63-SF
100-SF
BT 30-SF
40-SF
50-SF



型號 Specification
AD-DSF



用途：用于固定不同規格刀杆尺寸上
For different sizes of holders

Induction Head
加熱頭

型號 Specification
SF-HC-3-20 標配
SF-HC-18-32 選配



用途：用于加熱不同規格尺寸
Induction for different sizes of cutters

Induction Ring
導熱環

型號 Specification
SFIR3-5
SFIR6-12
SFIR14-20
SFIR25-32



用途：有效隔絕熱源、冷空氣與外界接觸
To prevent the heating and cooling part from outside environment

Clamp For Tools
刀具夾持器

型號 Specification
CFCT-3
CFCT-4
CFCT-6
CFCT-8
CFCT-10
CFCT-12

用途：用于置入、取出刀具用，
并可設定刀具長度
For inserting and removing the cutting tools from tool holder;
Setting either the overhang length or insertion length of the cutting tool.

HSK Tool Holder Sleeve
HSK套筒

型號 Specification
SFTHS84*101

用途：用于固定不同規格刀杆尺寸上
Supporting holder during tool changes

Operating Instructions
注意事項

使用工具
Tools That Can Be Used

- 請使用超硬刀具。高速鋼刀具不能熱卸。
- 使用公差範圍外的刀具是刀柄破損和發生滑落事故的原因。
- 另外，刀具柄部的細小鐵屑等附着物會和阻礙夾持孔正常裝夾，造成刀具無法拔出。
- Please use the carbide cutter. No HSS cutter.
- No shrink release is possible for any tool for high speed steel.
- A tools exceeding its tolerance can cause breakage or slippage.

佩戴耐熱手套
Take Care To Avoid Burns

- 熱裝作業時，會産生高温，非常危險，請務必佩戴耐熱手套。
- Take care to avoid burns:Because the metal becomes quite hot during heating operation, be sure to wear gloves.

拉釘（BT）
Retention Knob(BT)

- 請利用出水拉釘，否則請將拉釘取下後再進行加熱。
- 通常拉釘不排出空氣就不能放入刀具。
- Use a retention knob that has perforations, or remove the retention knob and heat it.
- The typical retention knob has no vent to release air, preventing tools from being inserted.

冷卻液導管(HSK)
Coolant Duct(HSK)

- 帶着冷却液導管加熱時，會破壞導管的O型環。
- 加熱時，請卸下冷却液導管。
- 不利用冷却液貫穿時，請準備可以安裝着進行熱裝卸的仿真導管。
- Remove the coolant duct before heating the holder, heating the holder with coolant duct attached,
- the o-ring will be damaged.
- A dummy duct is available for coolant shrinking and removing in place.

Operating Instructions
注意事項

用外部空氣冷卻
Cooling By Air From Outside

- 在HRB-03S、HRB-02S、HRB-01中、用外部空氣冷却時，不要將空氣直接加到熱裝裝置上。
- 電熱器内的風扇熔化，出現故障。
- Do not directly apply air to the shrink-fitting heater when cooling the HRB-03S, HRB-02S or HRB-01 using air from the outside.
- The fan in the heater will melt resulting in a breakdown.

水冷時的注意
Precautions For Water-Cooling

- 熱裝之後水冷，産生大量水蒸氣，有燙傷的危險性。
- 請在熱裝裝置冷却1分鐘以上（COOL狀態）之後進行水冷。
- 請完全除去水分。殘留水分後，生銹會引起刀柄破損。
- Water-cooling immediately after shrink fitting may result in burns due to the large quantity of steam generated.
- Be sure to set the shrink-fitting heater setting to cool and cool the holder for at least one minute before water-cooling it.
- Moisture left on the holder may lead to rust formation and damage to the holder. so be sure to completely remove all moisture.



ASR/EMR

ASR Screw-on Cutter for High-feed Milling
ASR鎖牙式大進給端銑刀頭



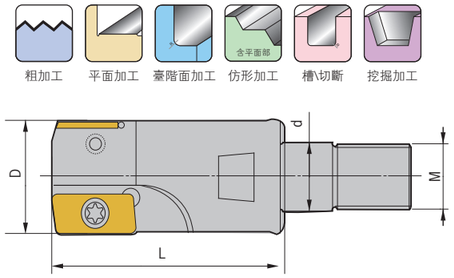

型號 Specification		刃數 Teeth	D	d	L	M	刀片型號 Insert	刀片螺釘 Insert screw	旗形扳手 Wrench	重量 Weight
ASR-	16-M8-2T	2	16	M8	25	M8	EPNW0603TN-8	M025W060	Q08	0.05
	17-M8-2T	2	17	M8	25	M8	EPNW0603TN-8	M025W060	Q08	0.05
	20-M10-2T	2	20	M10	30	M10	EPNW0603TN-8	M025W060	Q08	0.09
	21-M10-2T	2	21	M10	30	M10	EPNW0603TN-8	M025W060	Q08	0.09
	25-M12-3T	3	25	M12	35	M12	EPNW0603TN-8	M025W060	Q08	0.14
	26-M12-3T	3	26	M12	35	M12	EPNW0603TN-8	M025W060	Q08	0.14

適用 Suitable:德克刀片、日立刀片 DEREK Or HITACHI Insert

EMR Screw-on Milling Cutter
EMR鎖牙式端銑刀頭



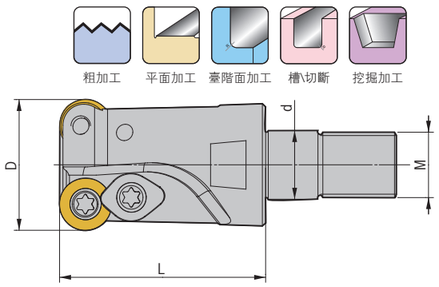

型號 Specification		刃數 Teeth	D	d	L	M	刀片型號 Insert	刀片螺釘 Insert screw	壓板 Clamp	壓板螺釘 Screw	旗形扳手 Wrench	重量 Weight
EMR-	4R16-M8-2T	2	16	8.5	25	M8	RPMW0802	M030Y070-1	YS-34	M030Y070-1	Q08	0.05
	4R17-M8-2T	2	17	8.5	25	M8	RPMW0802	M030Y070-1	YS-34	M030Y070-1	Q08	0.05
	4R20-M10-2T	2	20	10.5	30	M10	RPMW0802	M030Y070-1	YS-34	M030Y070-1	Q08	0.09
	4R21-M10-2T	2	21	10.5	30	M10	RPMW0802	M030Y070-1	YS-34	M030Y070-1	Q08	0.09
	5R25-M12-2T	2	25	12.5	35	M12	RPMW1003	M040S080-1	YS-43	M040S100-1	Q15	0.14
	5R26-M12-2T	2	26	12.5	35	M12	RPMW1003	M040S080-1	YS-43	M040S100-1	Q15	0.14
	5R30-M12-2T	2	30	12.5	35	M12	RPMW1003	M040S100-1	YS-43	M040S120	Q15	0.14
	5R35-M16-3T	3	35	17	43	M16	RPMW1003	M040S100-1	YS-43	M040S120	Q15	0.25

適用 Suitable:德克刀片、三菱刀片 DEREK Or MITSUBISHI Insert

TRS/RCF

TRS Screw-on Milling Cutter
TRS鎖牙式端銑刀頭



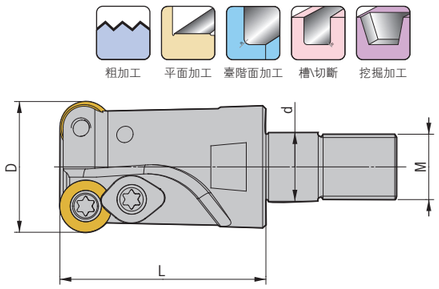

型號 Specification		刃數 Teeth	D	d	L	M	刀片型號 Insert	刀片螺釘 Insert screw	壓板 Clamp	壓板螺釘 Screw	旗形扳手 Wrench	重量 Weight
TRS-	4R16-M8-2T	2	16	8.5	25	M8	RDMT0802	M030Y070-1	YS-34	M030Y070-1	Q08	0.05
	4R17-M8-2T	2	17	8.5	25	M8	RDMT0802	M030Y070-1	YS-34	M030Y070-1	Q08	0.05
	4R20-M10-2T	2	20	10.5	30	M10	RDMT0802	M030Y070-1	YS-34	M030Y070-1	Q08	0.09
	4R21-M10-2T	2	21	10.5	30	M10	RDMT0802	M030Y070-1	YS-34	M030Y070-1	Q08	0.09
	5R25-M12-2T	2	25	12.5	35	M12	RDMT10T3	M040R080-2	YS-43	M040S100-1	Q15	0.14
	5R26-M12-2T	2	26	12.5	35	M12	RDMT10T3	M040R080-2	YS-43	M040S100-1	Q15	0.14
	5R30-M12-2T	2	30	12.5	35	M12	RDMT10T3	M040R080-2	YS-43	M040S100-1	Q15	0.14
	5R35-M16-3T	3	35	17	43	M16	RDMT10T3	M040R090	YS-43	M040S100-1	Q15	0.25

適用 Suitable:德克刀片、三菱刀片 DEREK Or MITSUBISHI Insert

RCF Screw-on Ball-nose Cutter For Roughing
RCF鎖牙式球形中粗刀頭



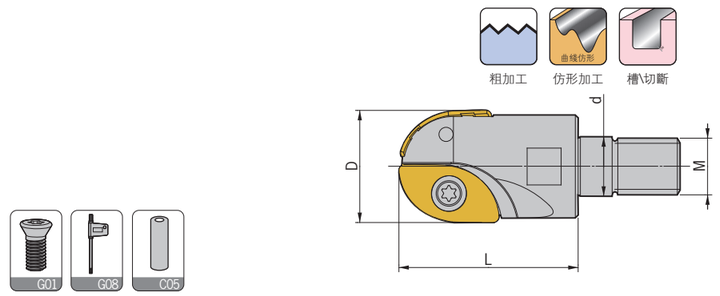

型號 Specification		刃數 Teeth	D	d	L	M	刀片型號 Insert	刀片螺釘 Insert screw	旗形扳手 Wrench	重量 Weight
RCF-	20-10R-M10-2T	2	20	10.5	40	M10	ZCEW100CE ZCEW100SE	M030D075 M030D095	Q08B	0.09
	25-12.5R-M12-2T	2	25	12.5	40	M12	ZCEW125CE ZCEW125SE	M040D080-3 M040D110-3	Q15B	0.14

適用 Suitable:德克刀片、日立刀片 DEREK Or HITACHI Insert

BF/300R/400R

BF Screw-on Ball-nose Cutter For Finishing
BF鎖牙式球形精銑刀頭



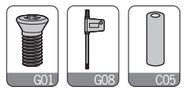

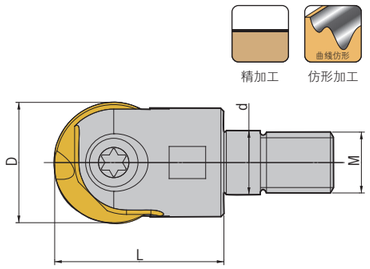

型號 Specification		刃數 Teeth	D	d	L	M	刀片型號 Insert	刀片螺釘 Insert screw	旗形扳手 Wrench	重量 Weight
BF-	6R-M6-1T	1	12	6.5	22	M6	P3200-D12	M050W090-6R	Q20	0.03
	8R-M8-1T	1	16	8.5	28	M8	P3202-D16	M050W130-8R	Q20	0.05
	10R-M10-1T	1	20	10.5	30	M10	P3201-D20	M050W170-10R	Q20	0.09
	12.5R-M12-1T	1	25	12.5	40	M12	P3202-D25	M060W210-12.5R	T30M	0.14

適用 Suitable:德克刀片、瓦爾特刀片 DEREK Or WALTER Insert

300R/400R Screw-on Milling Cutter
300R/400R鎖牙式直角端銑刀頭





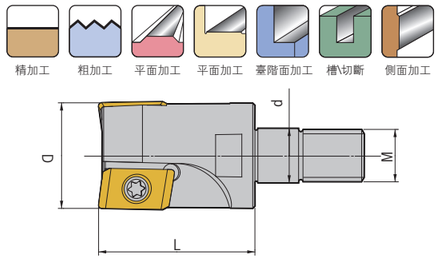

型號 Specification		刃數 Teeth	D	d	L	M	刀片型號 Insert	刀片螺釘 Insert screw	旗形扳手 Wrench	重量 Weight
300R-	16-M8-2T	2	16	8.5	25	M8	APMT1135	M025W060	Q08	0.05
	17-M8-2T	2	17	8.5	25	M8	APMT1135	M025W060	Q08	0.05
	20-M10-2T	2	20	10.5	30	M10	APMT1135	M025W060	Q08	0.09
	21-M10-2T	2	21	10.5	30	M10	APMT1135	M025W060	Q08	0.09
	25-M12-3T	3	25	12.5	35	M12	APMT1135	M025W060	Q08	0.14
	26-M12-3T	3	26	12.5	35	M12	APMT1135	M025W060	Q08	0.14
400R-	25-M12-2T	2	25	12.5	35	M12	APMT1604	M040S080-1	Q15	0.14
	26-M12-2T	2	26	12.5	35	M12	APMT1604	M040S080-1	Q15	0.14
	30-M12-2T	2	30	12.5	35	M12	APMT1604	M040S100-1	Q15	0.16
	35-M16-3T	3	35	17	43	M16	APMT1604	M040S100-1	Q15	0.24

適用 Suitable:德克刀片、三菱刀片 DEREK Or MITSUBISHI Insert

AJU/R390

AJU Screw-on Cutter For Drilling Milling
AJU鎖牙式過中心鑽銑刀頭





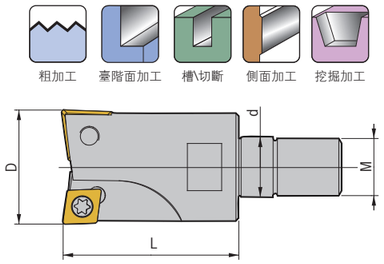

型號 Specification		刃數 Teeth	D	d	L	M	刀片型號 Insert	刀片螺釘 Insert screw	旗形扳手 Wrench	重量 Weight
AJU-	16-M8-2T	2	16	8.5	28	M8	CCMT060204 CPMT080204Z	M025W060	Q08B	0.05
	20-M10-2T	2	20	10.5	32	M10	CCMT060204 CPMT090204Z	M025W060 M035R080-1	Q08B Q15B	0.09
	25-M12-2T	2	25	12.5	38	M12	CPMT090308 CPMT120308Z	M040R080-2	Q15B	0.14
	32-M16-2T	2	32	17	42	M16	CPMT120408 CPMT160408Z	M050Y110-4	Q20B	0.23

適用 Suitable:德克刀片、日立刀片 DEREK Or HITACHI Insert

R390 Screw-on Milling Cutter
R390鎖牙式端銑刀頭





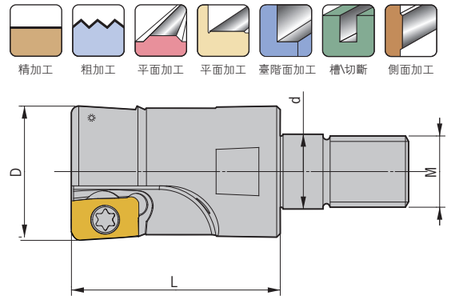

型號 Specification		刃數 Teeth	D	d	L	M	刀片型號 Insert	刀片螺釘 Insert screw	旗形扳手 Wrench	重量 Weight
R390-	16-M8-2T	2	16	8.5	28	M8	R390-11T308	M025W050	Q08	0.05
	17-M8-2T	2	17	8.5	28	M8	R390-11T308	M025W050	Q08	0.05
	20-M10-2T	2	20	10.5	30	M10	R390-11T308	M025W050	Q08	0.09
	21-M10-2T	2	21	10.5	30	M10	R390-11T308	M025W050	Q08	0.09
	25-M12-3T	3	25	12.5	35	M12	R390-11T308	M025W050	Q08	0.14
	26-M12-3T	3	26	12.5	35	M12	R390-11T308	M025W050	Q08	0.14

適用 Suitable:德克刀片、山特維克刀片 DEREK OrSANDVIK Insert

DS

DS Solid Carbide Holder
DS抗振銑刀頭接杆

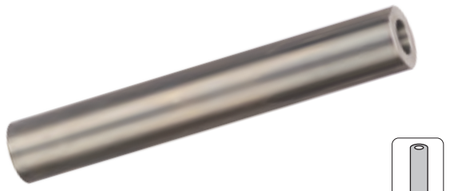



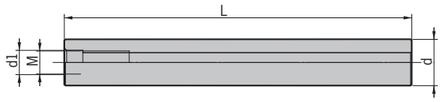

型號 Specification	d	L	M	d1	重量 Weight
DS- C12-M6-100	12	100	M6	6.5	0.14
C12-M6-150	12	150	M6	6.5	0.21
C12-M6-200	12	200	M6	6.5	0.29
C15-M8-100	15	100	M8	8.5	0.23
C15-M8-150	15	150	M8	8.5	0.35
C15-M8-200	15	200	M8	8.5	0.46
C15.6-M8-150	15.6	150	M8	8.5	0.38
C15.6-M8-200	15.6	200	M8	8.5	0.51
C15.6-M8-250	15.6	250	M8	8.5	0.6
C16-M8-100	16	100	M8	8.5	0.26
C16-M8-150	16	150	M8	8.5	0.39
C16-M8-200	16	200	M8	8.5	0.51
C16-M8-250	16	250	M8	8.5	0.65
C16-M8-300	16	300	M8	8.5	0.79
C19-M10-150	19	150	M10	10.5	0.54
C19-M10-200	19	200	M10	10.5	0.72
C19-M10-250	19	250	M10	10.5	0.91
C20-M10-100	20	100	M10	10.5	0.42
C20-M10-150	20	150	M10	10.5	0.6
C20-M10-200	20	200	M10	10.5	0.82
C20-M10-250	20	250	M10	10.5	1
C20-M10-300	20	300	M10	10.5	1.22
C24-M12-150	24	150	M12	12.5	0.81
C24-M12-200	24	200	M12	12.5	1.08
C24-M12-250	24	250	M12	12.5	1.35
C24-M12-300	24	300	M12	12.5	1.62
C25-M12-150	25	150	M12	12.5	0.94
C25-M12-200	25	200	M12	12.5	1.25
C25-M12-250	25	250	M12	12.5	1.55
C25-M12-300	25	300	M12	12.5	1.83
C32-M16-150	32	150	M16	17	1.43
C32-M16-200	32	200	M16	17	1.9
C32-M16-250	32	250	M16	17	2.38
C32-M16-300	32	300	M16	17	2.81
C32-M16-350	32	350	M16	17	3.28
C32-M16-400	32	400	M16	17	3.75

Screwed-on Milling Cutter VS Standard Milling Cutter
鎢鋼抗震刀杆和鋼制刀杆的性能比較

加工條件/Cutting Condition

■使用工具：鋼制刀杆R390-C20-20-160
超强硬杆DS20-19-150-M10+R390-DS20-20-2T
■被加工材質：55#
■硬質：201HB

■Cutter: R390-C20-20-160 ---------- A
DS20-19-150-M10+R390-DS20-20-2T ------ B
■Work piece: 55#
■Hardness: 201HB

	低速條件	高速條件
切削速度	Vc=80m/min	Vc=150m/min
主軸轉速	N=1,270min^{-1}	N=2,390min^{-1}
進給速度	F=2,000mm/min	F=4,800mm/min
每轉進給	f=1.6mm/rev	f=2.0mm/rev

切深：Ap=0.3mm
切寬：Ae=12mm
冷却方式：切削液
使用機床：立式加工中心
懸長：L=190mm
順銑

加工範圍 Range

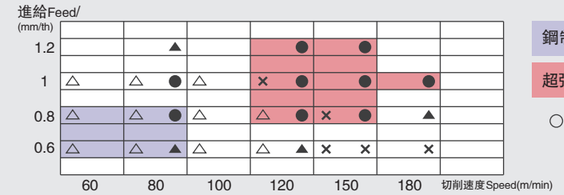

鋼制刀杆：R390-C20-20-160(○ △ ×)
超强硬杆：DS20-19-150-M10+R390-DS20-20-2T （● ▲ ×)

○● 無振動 Free Vibration　△▲ 振動較小 Light Vibration　× 振動較大 Big Vibration

加工效率提高3倍！

切削阻力 Cutting Resistance Force

低速條件（Vc=80m/min）

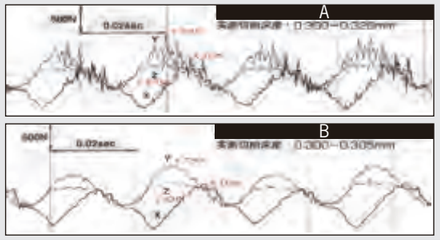

高速條件（Vc=150m/min）

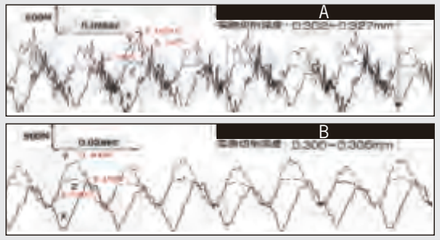

壽命判定 Tool Life

壽命基準（VBMAX 0.2MM以上）

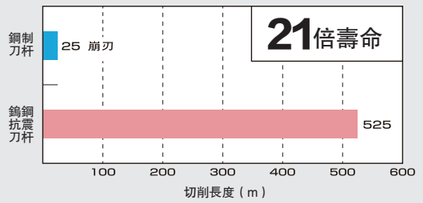

刀片損傷狀況

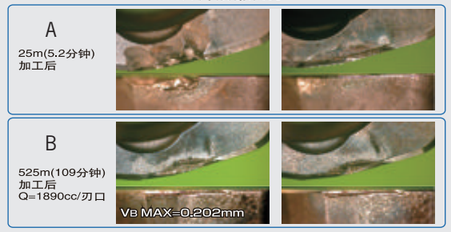

實驗結果　刀具壽命大幅提高　低速切削高速切削均無震動

Result: Compared to stardard milling cutter,screwed-on milling cutter with solid carbide holder enjoys a much longer tool life and lighter vibration.

AJX

AJX High Feed Indexable Milling Tool
AJX大進給立銑刀







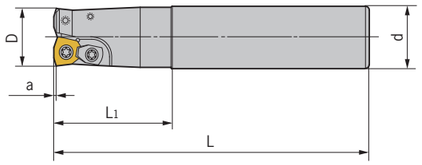

型號 Specification		刃數 Teeth	D	d	a	L1	L	刀片 Insert	刀片螺釘 Insert screw	壓板 Clamp	壓板螺釘 Clamp Screw	旗形扳手 Wrench	重量 Weight
AJX-	C20-20-130-2T	2	20	20	1.5	50	130	JOMT080320	M030Y070-2	-	-	Q10R	0.29
	C20-20-180-2T	2	20	20	1.5	100	180	JOMT080320	M030Y070-2	-	-	Q10R	0.40
	C20-20-250-2T	2	20	20	1.5	130	250	JOMT080320	M030Y070-2	-	-	Q10R	0.60
	C20-22-130-2T	2	22	20	1.5	30	130	JOMT080320	M030Y070-2	-	-	Q10R	0.30
	C20-22-180-2T	2	22	20	1.5	30	180	JOMT080320	M030Y070-2	-	-	Q10R	0.40
	C20-22-250-2T	2	22	20	1.5	30	250	JOMT080320	M030Y070-2	-	-	Q10R	0.60
	C25-25-140-2T	2	25	25	2	60	140	JDMW09T320	M035T085	YD-13	M040S100-1	Q15B	0.47
	C25-25-200-2T	2	25	25	2	120	200	JDMW09T320	M035T085	YD-13	M040S100-1	Q15B	0.69
	C25-25-250-2T	2	25	25	2	130	250	JDMW09T320	M035T085	YD-13	M040S100-1	Q15B	0.91
	C25-28-140-2T	2	28	25	2	40	140	JDMW09T320	M035T085	YD-13	M040S100-1	Q15B	0.49
	C25-28-200-2T	2	28	25	2	40	200	JDMW09T320	M035T085	YD-13	M040S100-1	Q15B	0.72
	C25-28-250-2T	2	28	25	2	40	250	JDMW09T320	M035T085	YD-13	M040S100-1	Q15B	0.95
	C32-30-160-2T	2	30	32	2	70	160	JDMW120420	M040R100-2	YD-13	M040S120	Q15B	0.90
	C32-30-200-2T	2	30	32	2	120	200	JDMW120420	M040R100-2	YD-13	M040S120	Q15B	1.13
	C32-30-250-2T	2	30	32	2	130	300	JDMW120420	M040R100-2	YD-13	M040S120	Q15B	1.45
	C32-32-160-2T	2	32	32	2	70	160	JDMW120420	M040R100-2	YD-13	M040S120	Q15B	0.90
	C32-32-200-2T	2	32	32	2	120	200	JDMW120420	M040R100-2	YD-13	M040S120	Q15B	1.13
	C32-32-250-2T	2	32	32	2	130	250	JDMW120420	M040R100-2	YD-13	M040S120	Q15B	1.45
	C32-35-160-2T	2	35	32	2	70	160	JDMW120420	M040R100-2	YD-13	M040S120	Q15B	0.92
	C32-35-200-2T	2	35	32	2	70	200	JDMW120420	M040R100-2	YD-13	M040S120	Q15B	1.17
	C32-35-250-2T	2	35	32	2	70	250	JDMW120420	M040R100-2	YD-13	M040S120	Q15B	1.48
	C32-40-200-3T	3	40	32	2	70	200	JDMW120420	M040R100-2	YD-13	M040S120	Q15B	1.20
	C32-40-250-3T	3	40	32	2	70	250	JDMW120420	M040R100-2	YD-13	M040S120	Q15B	1.50
	C32-40-300-3T	3	40	32	2	70	300	JDMW120420	M040R100-2	YD-13	M040S120	Q15B	1.80

適用 Suitable:三菱刀片 MITSUBISHI Insert

特 點 / Feature

■最適合大進給切削。
■采用錐型設計，抗彎鋼性極高。
■Excellent for high-feed cutting;
■Taper-off design minimizes interference and maximizes rigidity.

EXP

EXP High Feed Indexable Milling Tool
EXP大進給立銑刀







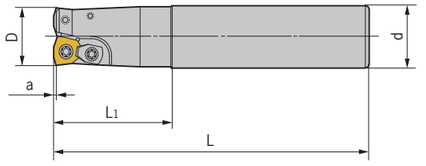

型號 Specification		刃數 Teeth	D	d	a	L1	L	刀片型號 Insert	刀片螺釘 Insert screw	壓板 Clamp	壓板螺釘 Clamp Screw	旗形扳手 Wrench	重量 Weight
EXP-	C20-20-130-2T	2	20	20	1.5	50	130	WPMW05H315	M035R080-1	-	-	Q15B	0.29
	C20-20-180-2T	2	20	20	1.5	100	180	WPMW05H315	M035R080-1	-	-	Q15B	0.40
	C25-25-140-2T	2	25	25	1.5	60	140	WPMW06X415	M040S100-1	YD-13	M040S120	Q15B	0.48
	C25-25-200-2T	2	25	25	1.5	120	200	WPMW06X415	M040S100-1	YD-13	M040S120	Q15B	0.70
	C25-25-250-2T	2	25	25	1.5	130	250	WPMW06X415	M040S100-1	YD-13	M040S120	Q15B	0.82
	C25-26-140-2T	2	26	25	1.5	60	140	WPMW06X415	M040S100-1	YD-13	M040S120	Q15B	0.48
	C25-26-200-2T	2	26	25	1.5	60	200	WPMW06X415	M040S100-1	YD-13	M040S120	Q15B	0.70
	C25-26-250-2T	2	26	25	1.5	60	250	WPMW06X415	M040S100-1	YD-13	M040S120	Q15B	0.82
	C32-32-160-2T	2	32	32	1.5	70	160	WPMW06X415	M040S100-1	YD-13	M040S120	Q15B	0.87
	C32-32-160-3T	3	32	32	1.5	70	160	WPMW06X415	M040S100-1	YD-13	M040S120	Q15B	0.87
	C32-32-200-2T	2	32	32	1.5	120	200	WPMW06X415	M040S100-1	YD-13	M040S120	Q15B	1.17
	C32-32-200-3T	3	32	32	1.5	120	200	WPMW06X415	M040S100-1	YD-13	M040S120	Q15B	1.17
	C32-32-250-2T	2	32	32	1.5	130	250	WPMW06X415	M040S100-1	YD-13	M040S120	Q15B	1.47
	C32-32-250-3T	3	32	32	1.5	130	250	WPMW06X415	M040S100-1	YD-13	M040S120	Q15B	1.47
	C32-33-160-2T	2	33	32	1.5	70	160	WPMW06X415	M040S100-1	YD-13	M040S120	Q15B	0.94
	C32-33-160-3T	3	33	32	1.5	70	160	WPMW06X415	M040S100-1	YD-13	M040S120	Q15B	0.94
	C32-33-200-2T	2	33	32	1.5	70	200	WPMW06X415	M040S100-1	YD-13	M040S120	Q15B	1.19
	C32-33-200-3T	3	33	32	1.5	70	200	WPMW06X415	M040S100-1	YD-13	M040S120	Q15B	1.19
	C32-33-250-2T	2	33	32	1.5	70	250	WPMW06X415	M040S100-1	YD-13	M040S120	Q15B	1.49
	C32-33-250-3T	3	33	32	1.5	70	250	WPMW06X415	M040S100-1	YD-13	M040S120	Q15B	1.49
	C32-40-200-3T	3	40	32	1.5	50	200	WPMW06X415	M040S100-1	YD-13	M040S100-1	Q15B	1.24
	C32-40-250-3T	3	40	32	1.5	50	250	WPMW06X415	M040S100-1	YD-13	M040S100-1	Q15B	1.55
	C32-40-300-3T	3	40	32	1.5	50	300	WPMW06X415	M040S100-1	YD-13	M040S100-1	Q15B	1.86
	C32-40-200-2T	2	40	32	1.5	50	200	WPMW080615	M050Y120-1	YD-16	M050Y110-2	Q20B	1.23
	C32-40-250-2T	2	40	32	1.5	50	250	WPMW080615	M050Y120-1	YD-16	M050Y110-2	Q20B	1.56
	C32-40-300-2T	2	40	32	1.5	50	300	WPMW080615	M050Y120-1	YD-16	M050Y110-2	Q20B	1.86

適用 Suitable:德克刀片、東芝刀片 DEREK Or TUNGALOY Insert

特 點 / Feature

■最適合大進給切削。
■采用錐型設計，抗彎鋼性極高。
■Excellent for high-feed cutting;
■Taper-off design minimizes interference and maximizes rigidity.

SKS

SKS High Feed Indexable Milling Tool
SKS大進給立銑刀







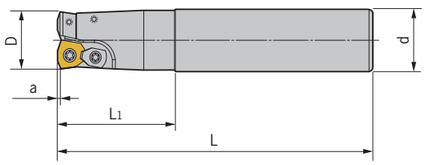

型號 Specification		刃數 Teeth	D	d	a	L1	L	刀片型號 Insert	刀片螺釘 Insert screw	壓板 Clamp	壓板螺釘 Clamp Screw	旗形扳手 Wrench	重量 Weight
SKS-	C20-20-130-2T	2	20	20	1.25	50	130	WDMW050316	M030Y070-2	-	-	Q10R	0.28
	C20-20-180-2T	2	20	20	1.25	100	180	WDMW050316	M030Y070-2	-	-	Q10R	0.39
	C20-21-130-2T	2	21	20	1.25	50	130	WDMW050316	M030Y070-2	-	-	Q10R	0.29
	C20-21-180-2T	2	21	20	1.25	50	180	WDMW050316	M030Y070-2	-	-	Q10R	0.41
	C25-25-140-2T	2	25	25	1.5	60	140	WDMW06T320	M040R080-2	YD-13	M040S100-1	Q15B	0.46
	C25-25-200-2T	2	25	25	1.5	70	200	WDMW06T320	M040R080-2	YD-13	M040S100-1	Q15B	0.69
	C25-26-140-2T	2	26	25	1.5	60	140	WDMW06T320	M040R080-2	YD-13	M040S100-1	Q15B	0.47
	C25-26-200-2T	2	26	25	1.5	60	200	WDMW06T320	M040R080-2	YD-13	M040S100-1	Q15B	0.71
	C32-30-160-2T	2	30	32	1.5	70	160	WDMW06T320	M040R080-2	YD-13	M040S100-1	Q15B	0.80
	C32-30-200-2T	2	30	32	1.5	70	200	WDMW06T320	M040R080-2	YD-13	M040S100-1	Q15B	1.05
	C32-32-160-3T	3	32	32	1.5	70	160	WDMW06T320	M040R080-2	YD-13	M040S100-1	Q15B	0.89
	C32-32-200-3T	3	32	32	1.5	70	200	WDMW06T320	M040R080-2	YD-13	M040S100-1	Q15B	1.16
	C32-33-160-3T	3	33	32	1.5	70	160	WDMW06T320	M040R080-2	YD-13	M040S100-1	Q15B	0.89
	C32-33-200-3T	3	33	32	1.5	70	200	WDMW06T320	M040R080-2	YD-13	M040S100-1	Q15B	1.16
	C32-32-160-2T	2	32	32	2	70	160	WDMW080520	M045Y110	YD-16	M045Y110	Q20B	0.89
	C32-32-200-2T	2	32	32	2	120	200	WDMW080520	M045Y110	YD-16	M045Y110	Q20B	1.15
	C32-33-160-2T	2	33	32	2	50	160	WDMW080520	M045Y110	YD-16	M045Y110	Q20B	0.84
	C32-33-200-2T	2	33	32	2	50	200	WDMW080520	M045Y110	YD-16	M045Y110	Q20B	1.15
	C32-40-200-3T	3	40	32	2	50	200	WDMW080520	M045Y110	YD-16	M045Y110	Q20B	1.24
	C32-40-250-3T	3	40	32	2	50	250	WDMW080520	M045Y110	YD-16	M045Y110	Q20B	1.55
	C42-40-200-3T	3	40	42	2	120	200	WDMW080520	M045Y110	YD-16	M045Y110	Q20B	1.80
	C42-40-250-3T	3	40	42	2	130	250	WDMW080520	M045Y110	YD-16	M045Y110	Q20B	2.25

適用 Suitable:德克刀片、黛杰刀片 DEREK Or DIJET Insert

特 點 / Feature

■最適合大進給切削。
■采用錐型設計，抗彎鋼性極高。

■Excellent for high-feed cutting;
■Taper-off design minimizes interference and maximizes rigidity.

ASR

ASR High-feed Milling Cutter
ASR大進給立銑刀



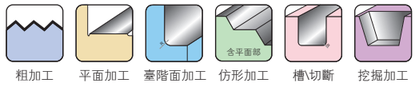



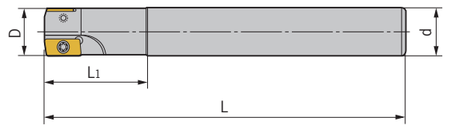

型號 Specification		刃數 Teeth	D	d	L1	L	刀片型號 Insert	刀片螺釘 Insert screw	旗形扳手 Wrench	重量 Weight
ASR-	C16-16-120-2T	2	16	16	40	120	EPNW0603TN-8	M025W060	Q08B	0.17
	C16-16-160-2T	2	16	16	50	160	EPNW0603TN-8	M025W060	Q08B	0.23
	C16-17-120-2T	2	17	16	27	120	EPNW0603TN-8	M025W060	Q08B	0.17
	C16-17-160-2T	2	17	16	27	160	EPNW0603TN-8	M025W060	Q08B	0.23
	C20-20-120-2T	2	20	20	50	120	EPNW0603TN-8	M025W060	Q08B	0.27
	C20-20-160-2T	2	20	20	50	160	EPNW0603TN-8	M025W060	Q08B	0.36
	C20-21-160-2T	2	21	20	27	160	EPNW0603TN-8	M025W060	Q08B	0.37
	C25-25-160-3T	3	25	25	60	160	EPNW0603TN-8	M025W060	Q08B	0.59
	C25-25-200-3T	3	25	25	70	200	EPNW0603TN-8	M025W060	Q08B	0.72
	C25-26-200-3T	3	26	25	50	200	EPNW0603TN-8	M025W060	Q08B	0.73
	C32-32-160-4T	4	32	32	70	160	EPNW0603TN-8	M025W060	Q08B	0.88
	C32-32-200-4T	4	32	32	115	200	EPNW0603TN-8	M025W060	Q08B	1.17
	C32-33-160-4T	4	33	32	60	160	EPNW0603TN-8	M025W060	Q08B	0.94
	C32-33-200-4T	4	33	32	70	200	EPNW0603TN-8	M025W060	Q08B	1.19
	C32-35-200-4T	4	35	32	50	200	EPNW0603TN-8	M025W060	Q08B	1.21
	C32-40-160-4T	4	40	32	50	160	EPNW0603TN-8	M025W060	Q08B	0.93
	C32-40-200-4T	4	40	32	50	200	EPNW0603TN-8	M025W060	Q08B	1.25

適用 Suitable:德克刀片、日立刀片 DEREK Or HITACHI Insert

特 點 / Feature

■高進給圓弧銑刀。
■不考慮缺損對刀片壽命的影響，則每刃進給量FZ設定的較大時壽命也較大，斷削、排削性能好。
■Excellent for high-feed cutting.
■To increase per teeth feedrate will improve the using life of insert without regard to the defect influence of its using life, Good design for chip breaking and removing

AHU

AHU Shoulder Milling Cutter
AHU直角臺肩銑刀



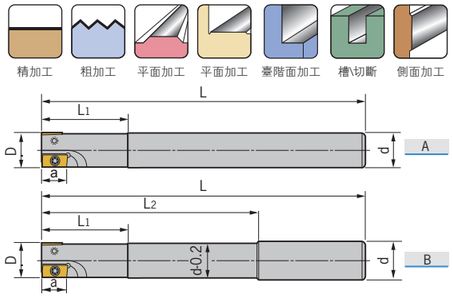

型號 Specification	刃數 Teeth	圖示 Fig	D	d	L1	L2	L	刀片 Insert	刀片螺釘 Insert screw	旗形扳手 Wrench	重量 Weight
AHU- C10-10-100-1T	1	A	10	10	25	-	100	JDMT100308	M025W050	Q08B	0.10
C12-12-130-1T	1	A	12	12	25	-	130	JDMT100308	M025W050	Q08B	0.11
C12-13-130-1T	1	A	13	12	25	-	130	JDMT100308	M025W050	Q08B	0.11
C16-16-120-2T	2	B	16	16	40	100	120	JDMT100308	M025W050	Q08B	0.17
C16-16-160-2T	2	B	16	16	50	115	160	JDMT100308	M025W050	Q08B	0.21
C16-16-180-2T	2	B	16	16	60	90	180	JDMT100308	M025W050	Q08B	0.26
C16-16-200-2T	2	B	16	16	60	100	200	JDMT100308	M025W050	Q08B	0.29
C20-20-120-2T	2	A	20	20	50	-	120	JDMT100308	M025W060	Q08B	0.26
C20-20-160-2T	2	A	20	20	60	-	160	JDMT100308	M025W060	Q08B	0.36
C20-20-200-2T	2	B	20	20	70	100	200	JDMT100308	M025W060	Q08B	0.46
C25-25-160-2T	2	A	25	25	70	-	160	JDMT150508	M040S080-1	Q15B	0.54
C25-25-200-2T	2	B	25	25	70	100	200	JDMT150508	M040S080-1	Q15B	0.68
C25-25-250-2T	2	B	25	25	80	115	250	JDMT150508	M040S080-1	Q15B	0.88
C25-25-300-2T	2	B	25	25	80	165	300	JDMT150508	M040S080-1	Q15B	1.02
C32-32-160-2T	2	A	32	32	48	-	160	JDMT150508	M040S080-1	Q15B	0.96
C32-32-200-2T	2	B	32	32	48	100	200	JDMT150508	M040S080-1	Q15B	1.17
C32-32-250-2T	2	B	32	32	48	115	250	JDMT150508	M040S080-1	Q15B	1.48
C32-32-250-3T	3	B	32	32	48	115	250	JDMT150508	M040S080-1	Q15B	1.48
C32-35-160-2T	2	A	35	32	60	-	160	JDMT150508	M040S080-1	Q15B	0.82
C32-35-200-2T	2	A	35	32	60	-	200	JDMT150508	M040S080-1	Q15B	1.18
C32-35-250-2T	2	A	35	32	60	-	250	JDMT150508	M040S080-1	Q15B	1.48
C32-35-300-2T	2	A	35	32	60	-	300	JDMT150508	M040S080-1	Q15B	1.78
C32-35-350-2T	2	A	35	32	60	-	350	JDMT150508	M040S080-1	Q15B	2.08
C32-35-400-2T	2	A	35	32	60	-	400	JDMT150508	M040S080-1	Q15B	2.38
C32-35-450-2T	2	A	35	32	60	-	450	JDMT150508	M040S080-1	Q15B	2.68
C32-35-500-2T	2	A	35	32	60	-	500	JDMT150508	M040S080-1	Q15B	2.98
C32-35-160-3T	3	A	35	32	60	-	160	JDMT150508	M040S080-1	Q15B	0.93
C32-35-200-3T	3	A	35	32	60	-	200	JDMT150508	M040S080-1	Q15B	1.18
C32-35-250-3T	3	A	35	32	60	-	250	JDMT150508	M040S080-1	Q15B	1.50
C32-35-300-3T	3	A	35	32	60	-	300	JDMT150508	M040S080-1	Q15B	1.81
C32-35-350-3T	3	A	35	32	60	-	350	JDMT150508	M040S080-1	Q15B	2.11
C32-35-400-3T	3	A	35	32	60	-	400	JDMT150508	M040S080-1	Q15B	2.43

適用 Suitable:日立刀片 HITACHI Insert

轉下頁
See next page

AHU

AHU Right Angle Shoulder Milling Cutter
AHU直角臺肩銑刀

特殊型號 Special size

型號 Specification	刃數 Teeth	圖示 Fig	D	d	a	L1	L2	L	刀片型號 Insert	刀片螺釘 Insert screw	旗形扳手 Wrench	重量 Weight
AHU- C15-16-120-2T	2	A	16	15	9	40	-	120	JDMT100308	M025W050	Q08B	0.15
C15-16-160-2T	2	A	16	15	9	40	-	160	JDMT100308	M025W050	Q08B	0.20
C15-16-180-2T	2	A	16	15	9	40	-	180	JDMT100308	M025W050	Q08B	0.23
C15-16-200-2T	2	A	16	15	9	40	-	200	JDMT100308	M025W050	Q08B	0.26
C16-17-120-2T	2	A	17	16	9	50	-	120	JDMT100308	M025W050	Q08B	0.17
C16-17-160-2T	2	A	17	16	9	50	-	160	JDMT100308	M025W050	Q08B	0.23
C16-17-180-2T	2	A	17	16	9	50	-	180	JDMT100308	M025W050	Q08B	0.27
C16-17-200-2T	2	A	17	16	9	50	-	200	JDMT100308	M025W050	Q08B	0.30
C19-20-160-2T	2	A	20	19	9	50	-	160	JDMT100308	M025W060	Q08B	0.31
C19-20-200-2T	2	A	20	19	9	50	-	200	JDMT100308	M025W060	Q08B	0.42
C20-21-160-2T	2	A	21	20	9	50	-	160	JDMT100308	M025W060	Q08B	0.37
C20-21-200-2T	2	A	21	20	9	50	-	200	JDMT100308	M025W060	Q08B	0.47
C24-25-160-2T	2	A	25	24	14	50	-	160	JDMT150508	M040S080-1	Q15B	0.48
C24-25-200-2T	2	A	25	24	14	50	-	200	JDMT150508	M040S080-1	Q15B	0.66
C24-25-250-2T	2	A	25	24	14	50	-	250	JDMT150508	M040S080-1	Q15B	0.88
C25-26-160-2T	2	A	26	25	14	50	-	160	JDMT150508	M040S080-1	Q15B	0.56
C25-26-200-2T	2	A	26	25	14	50	-	200	JDMT150508	M040S080-1	Q15B	0.71
C25-26-250-2T	2	A	26	25	14	50	-	250	JDMT150508	M040S080-1	Q15B	0.90

適用 Suitable:日立刀片 HITACHI Insert

特 點 / Feature

■刃口具備鋒利與强固兩大特點的高進給銑刀。
■可進行傾斜加工。
■一般的鋼材到難切削鋼材都適用，最適合于加工渦輪葉片。
■For high-feed cutting;High rigidity.
■Can be used for slope machining.
■For different work pieces (see below);Excellent for machining turbine blade.

被削材 Work Piece	硬度 Hardness	切削速度 Cutting Speed	每齒進給量FZ(mm/齒) Feed
軟鋼 Mild steel	180HB以下	120-200	0.05-0.2
碳素鋼 Carbon steel	180-280HB	100-200	0.05-0.25
合金鋼 Alloy steel	280-350HB	80-160	0.05-0.25
高硬度鋼 Hardened steel	40HRC以上	50-100	0.05-0.15
不銹鋼 Stainless steel	200HB以下	80-160	0.05-0.25
普通鑄鐵 FC250	＜ 350N/mm²	100-160	0.1-0.25
FCD450以下 鑄鐵	＜ 450N/mm²	80-140	0.1-0.25
FCD500以下 Cast iron	500-800N/mm²	60-120	0.05-0.25

JRC

JRC Indexable End Mill
JRC捨弃式端銑刀





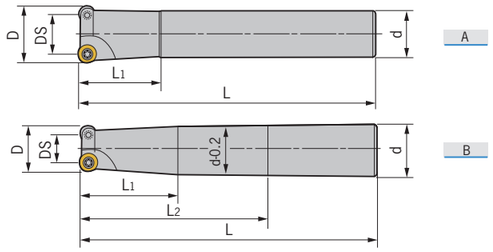

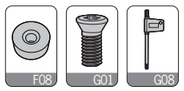

	型號 Specification	刃數 Teeth	圖示 Fig	D	DS	d	L_1	L_2	L	刀片 Insert	刀片螺釘 Insert screw	旗形扳手 Wrench	重量 Weight
JRC-	C20-5R20-160-2T	2	A	20	10	20	40	-	160	RC*T10T3	M035T085	Q15B	0.35
	C20-5R25-160-2T	2	A	25	15	20	40	-	160	RC*T10T3	M035T085	Q15B	0.40
	C20-5R25-200-2T	2	A	25	15	20	40	-	200	RC*T10T3	M035T085	Q15B	0.50
	C25-5R25-160-2T	2	A	25	15	25	60	-	160	RC*T10T3	M035T085	Q15B	0.55
	C25-5R25-200-2T	2	B	25	15	25	70	100	200	RC*T10T3	M035T085	Q15B	0.75
	C25-5R25-250-2T	2	B	25	15	25	60	115	250	RC*T10T3	M035T085	Q15B	0.95
	C25-6R32-160-2T	2	A	32	20	25	50	-	160	RC*T1204	M035T085	Q15B	0.60
	C25-6R32-200-2T	2	A	32	20	25	50	-	200	RC*T1204	M035T085	Q15B	0.80
	C25-6R32-250-2T	2	A	32	20	25	50	-	250	RC*T1204	M035T085	Q15B	1.00

適用 Suitable:德克刀片、山特維克刀片 DEREK Or SANDVIK Insert

特殊型號 Special size

	型號 Specification	刃數 Teeth	圖示 Fig	D	DS	d	L_1	L	刀片 Insert	刀片螺釘 Insert screw	旗形扳手 Wrench	重量 Weight
JRC-	C24-5R25-160-2T	2	A	25	15	24	60	160	RC*T10T3	M035T085	Q15B	0.55
	C24-5R25-200-2T	2	A	25	15	24	70	200	RC*T10T3	M035T085	Q15B	0.70
	C24-5R25-250-2T	2	A	25	15	24	80	250	RC*T10T3	M035T085	Q15B	0.90
	C25-5R26-160-2T	2	A	26	16	25	60	160	RC*T10T3	M035T085	Q15B	0.55
	C25-5R26-200-2T	2	A	26	16	25	70	200	RC*T10T3	M035T085	Q15B	0.75
	C25-5R26-250-2T	2	A	26	16	25	80	250	RC*T10T3	M035T085	Q15B	1.00

適用 Suitable:德克刀片、山特維克刀片 DEREK Or SANDVIK Insert

特 點 / Feature

■適配山特維克精磨刀片，精度更高，精加工效果更佳。
■刀體整體預熱後，再進精磨。避免二次熱處理使刀體產生變形，從而確保了精確的公差範圍和超强的鋼性。
■With Sandvik insert, high efficiency on finish machining,Excellent for finishing.
■Tool body is machined after heat treatment, which promises a precise tolerance and hogh rigidity.

EMR

EMR Indexable End Mill
EMR捨弃式端銑刀



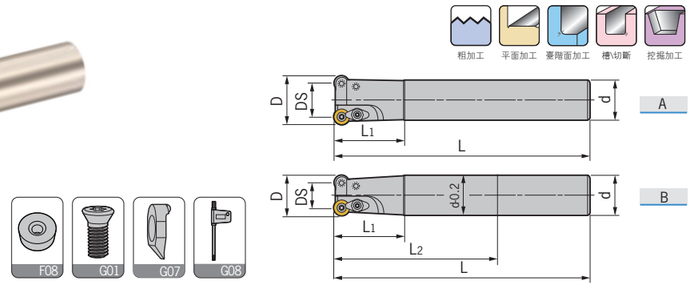

	型號 Specification	刃數 Teeth	圖示 Fig	D	DS	d	L_1	L_2	L	刀片 Insert	刀片螺釘 Insert screw	壓板 Clamp	壓板螺釘 Clamp Screw	旗形扳手 Wrench	重量 Weight
EMR-	C12-4R12-130-1T	1	A	12	4	12	30	-	130	RPMW0802	M030Y060	-	-	Q08B	0.11
	C16-4R16-160-2T	2	A	16	8	16	40	-	160	RPMW0802	M030Y070-1	YS-34	M030Y070-1	Q08B	0.23
	C16-4R16-200-2T	2	B	16	8	16	40	100	200	RPMW0802	M030Y070-1	YS-34	M030Y070-1	Q08B	0.23
	C20-4R20-160-2T	2	A	20	12	20	60	-	160	RPMW0802	M030Y070-1	YS-34	M030Y070-1	Q08B	0.36
	C20-4R20-200-2T	2	B	20	12	20	70	100	200	RPMW0802	M030Y070-1	YS-34	M030Y070-1	Q08B	0.44
	C20-5R20-160-2T	2	A	20	10	20	60	-	160	RPMW1003	M040S080-1	YS-39	M035T085	Q15B	0.35
	C20-5R20-200-2T	2	B	20	10	20	70	100	200	RPMW1003	M040S080-1	YS-39	M035T085	Q15B	0.45
	C20-5R25-160-2T	2	A	25	15	20	40	-	160	RPMW1003	M040S080-1	YS-43	M040S100-1	Q15B	0.36
	C20-5R25-200-2T	2	A	25	15	20	40	-	200	RPMW1003	M040S080-1	YS-43	M040S100-1	Q15B	0.56
	C25-5R25-160-2T	2	A	25	15	25	60	-	160	RPMW1003	M040S080-1	YS-43	M040S100-1	Q15B	0.54
	C25-5R25-180-2T	2	B	25	15	25	60	90	180	RPMW1003	M040S080-1	YS-43	M040S100-1	Q15B	0.62
	C25-5R25-200-2T	2	B	25	15	25	70	100	200	RPMW1003	M040S080-1	YS-43	M040S100-1	Q15B	0.70
	C25-5R25-250-2T	2	B	25	15	25	80	115	250	RPMW1003	M040S080-1	YS-43	M040S100-1	Q15B	0.86
	C3'/4-5R30-110-2T	2	A	30	20	3/4	30	-	110	RPMW1003	M040S100-1	YS-43	M040S120	Q15B	0.28
	C20-5R30-110-2T	2	A	30	20	20	30	-	110	RPMW1003	M040S100-1	YS-43	M040S120	Q15B	0.27
	C25-5R30-160-2T	2	A	30	20	25	35	-	160	RPMW1003	M040S100-1	YS-43	M040S120	Q15B	0.57
	C25-5R30-200-2T	2	A	30	20	25	35	-	200	RPMW1003	M040S100-1	YS-43	M040S120	Q15B	0.75
	C25-5R30-250-2T	2	A	30	20	25	35	-	250	RPMW1003	M040S100-1	YS-43	M040S120	Q15B	0.92
	C25-5R30-300-2T	2	A	30	20	25	35	-	300	RPMW1003	M040S100-1	YS-43	M040S120	Q15B	1.11
	C32-5R35-160-2T	2	A	35	25	32	48	-	160	RPMW1003	M040S100-1	YS-43	M040S120	Q15B	0.95
	C32-5R35-200-2T	2	A	35	25	32	48	-	200	RPMW1003	M040S100-1	YS-43	M040S120	Q15B	1.20
	C32-5R35-250-2T	2	A	35	25	32	48	-	250	RPMW1003	M040S100-1	YS-43	M040S120	Q15B	1.50
	C32-5R35-300-2T	2	A	35	25	32	48	-	300	RPMW1003	M040S100-1	YS-43	M040S120	Q15B	1.80
	C32-5R35-350-2T	2	A	35	25	32	48	-	350	RPMW1003	M040S100-1	YS-43	M040S120	Q15B	2.13
	C32-5R35-160-3T	3	A	35	25	32	48	-	160	RPMW1003	M040S100-1	YS-43	M040S120	Q15B	0.91
	C32-5R35-200-3T	3	A	35	25	32	48	-	200	RPMW1003	M040S100-1	YS-43	M040S120	Q15B	1.17
	C32-5R35-250-3T	3	A	35	25	32	48	-	250	RPMW1003	M040S100-1	YS-43	M040S120	Q15B	1.49
	C32-5R35-300-3T	3	A	35	25	32	48	-	300	RPMW1003	M040S100-1	YS-43	M040S120	Q15B	1.79
	C32-5R35-350-3T	3	A	35	25	32	48	-	350	RPMW1003	M040S100-1	YS-43	M040S120	Q15B	2.11
	C32-6R32-160-2T	2	A	32	20	32	48	-	160	RPMT1204	M040S100-1	YS-43	M040S120	Q15B	0.89
	C32-6R32-200-2T	2	A	32	20	32	48	-	200	RPMT1204	M040S100-1	YS-43	M040S120	Q15B	1.16
	C32-6R32-250-2T	2	A	32	20	32	48	-	250	RPMT1204	M040S100-1	YS-43	M040S120	Q15B	1.46
	C32-6R40-160-3T	3	A	40	28	32	48	-	160	RPMT1204	M040S100-1	YS-43	M040S120	Q15B	0.93
	C32-6R40-200-3T	3	A	40	28	32	48	-	200	RPMT1204	M040S100-1	YS-43	M040S120	Q15B	1.20
	C32-6R40-250-3T	3	A	40	28	32	48	-	250	RPMT1204	M040S100-1	YS-43	M040S120	Q15B	1.51
	C32-6R40-300-3T	3	A	40	28	32	48	-	300	RPMT1204	M040S100-1	YS-43	M040S120	Q15B	1.81
	C32-6R50-160-4T	4	A	50	38	32	48	-	160	RPMT1204	M040S100-1	YS-43	M040S120	Q15B	1.03
	C32-6R50-200-4T	4	A	50	38	32	48	-	200	RPMT1204	M040S100-1	YS-43	M040S120	Q15B	1.29
	C32-6R50-250-4T	4	A	50	38	32	48	-	250	RPMT1204	M040S100-1	YS-43	M040S120	Q15B	1.59

適用 Suitable:德克刀片、三菱刀片 DEREK Or MITSUBISHI Insert

轉下頁
See next page

EMR

EMR Indexable End Mill
EMR捨弃式端銑刀







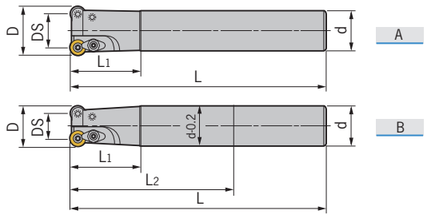

特殊型號 Special specification

型號 Specification		刃數 Teeth	圖示 Fig	D	DS	d	L_1	L	刀片 Insert	刀片螺釘 Insert screw	壓板 Clamp	壓板螺釘 Clamp Screw	旗形扳手 Wrench	重量 Weight
EMR-	C15-4R16-160-2T	2	A	16	8	15	40	160	RPMW0802	M030Y070-1	YS-34	M030Y070-1	Q08B	0.20
	C15-4R16-200-2T	2	A	16	8	15	40	200	RPMW0802	M030Y070-1	YS-34	M030Y070-1	Q08B	0.25
	C16-4R17-160-2T	2	A	17	9	16	40	160	RPMW0802	M030Y070-1	YS-34	M030Y070-1	Q08B	0.23
	C16-4R17-200-2T	2	A	17	9	16	40	200	RPMW0802	M030Y070-1	YS-34	M030Y070-1	Q08B	0.29
	C19-4R20-160-2T	2	A	20	12	19	60	160	RPMW0802	M030Y070-1	YS-34	M030Y070-1	Q08B	0.32
	C19-4R20-200-2T	2	A	20	12	19	70	200	RPMW0802	M030Y070-1	YS-34	M030Y070-1	Q08B	0.41
	C20-4R21-160-2T	2	A	21	13	20	60	160	RPMW0802	M040S080-1	YS-39	M035T085	Q15B	0.36
	C20-4R21-200-2T	2	A	21	13	20	70	200	RPMW0802	M040S080-1	YS-39	M035T085	Q15B	0.45
	C20-5R21-160-2T	2	A	21	11	20	60	160	RPMW1003	M040S080-1	YS-43	M040S100-1	Q15B	0.38
	C20-5R21-200-2T	2	A	21	11	20	70	200	RPMW1003	M040S080-1	YS-43	M040S100-1	Q15B	0.47
	C24-5R25-160-2T	2	A	25	15	24	60	160	RPMW1003	M040S080-1	YS-43	M040S100-1	Q15B	0.51
	C24-5R25-200-2T	2	A	25	15	24	70	200	RPMW1003	M040S080-1	YS-43	M040S100-1	Q15B	0.65
	C24-5R25-250-2T	2	A	25	15	24	80	250	RPMW1003	M040S080-1	YS-43	M040S100-1	Q15B	0.83
	C25-5R26-160-2T	2	A	26	16	25	60	160	RPMW1003	M040S080-1	YS-43	M040S100-1	Q15B	0.55
	C25-5R26-200-2T	2	A	26	16	25	70	200	RPMW1003	M040S080-1	YS-43	M040S100-1	Q15B	0.70
	C25-5R26-250-2T	2	A	26	16	25	80	250	RPMW1003	M040S080-1	YS-43	M040S100-1	Q15B	0.89

適用 Suitable:德克刀片、三菱刀片 DEREK Or MITSUBISHI Insert

EMRT

EMRT Indexable End Mill
EMRT捨弃式端銑刀







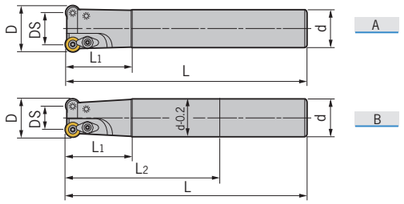

型號 Specification		刃數 Teeth	圖示 Fig	D	DS	d	L_1	L_2	L	刀片 Insert	刀片螺釘 Insert screw	壓板 Clamp	壓板螺釘 Clamp Screw	旗形扳手 Wrench	重量 Weight
EMRT-	C12-4R12-130-1T	1	A	12	4	12	30	-	130	RPMT08T2	M030Y060	-	-	Q08B	0.10
	C16-4R16-160-2T	2	A	16	8	16	40	-	160	RPMT08T2	M030Y070-1	YS-34	M030Y070-1	Q08B	0.23
	C16-4R16-200-2T	2	B	16	8	16	40	100	200	RPMT08T2	M030Y070-1	YS-34	M030Y070-1	Q08B	0.29
	C20-4R20-160-2T	2	A	20	12	20	60	-	160	RPMT08T2	M030Y070-1	YS-34	M030Y070-1	Q08B	0.32
	C20-4R20-200-2T	2	B	20	12	20	70	100	200	RPMT08T2	M030Y070-1	YS-34	M030Y070-1	Q08B	0.45
	C20-5R20-160-2T	2	A	20	10	20	60	-	160	RPMT10T3	M040S080-1	YS-39	M035T085	Q15B	0.34
	C20-5R20-200-2T	2	B	20	10	20	70	100	200	RPMT10T3	M040S080-1	YS-39	M035T085	Q15B	0.44
	C20-5R25-160-2T	2	A	25	15	20	40	-	160	RPMT10T3	M040S080-1	YS-43	M040S100-1	Q15B	0.36
	C20-5R25-200-2T	2	A	25	15	20	40	-	200	RPMT10T3	M040S080-1	YS-43	M040S100-1	Q15B	0.47
	C25-5R25-160-2T	2	A	25	15	25	60	-	160	RPMT10T3	M040S080-1	YS-43	M040S100-1	Q15B	0.54
	C25-5R25-200-2T	2	B	25	15	25	70	100	200	RPMT10T3	M040S080-1	YS-43	M040S100-1	Q15B	0.70
	C25-5R25-250-2T	2	B	25	15	25	80	115	250	RPMT10T3	M040S080-1	YS-43	M040S100-1	Q15B	0.88
	C20-5R30-110-2T	2	A	30	20	20	30	-	110	RPMT10T3	M040S100-1	YS-43	M040S100-1	Q15B	0.32
	C25-5R30-160-2T	2	A	30	20	25	35	-	160	RPMT10T3	M040S100-1	YS-43	M040S100-1	Q15B	0.57
	C25-5R30-200-2T	2	A	30	20	25	35	-	200	RPMT10T3	M040S100-1	YS-43	M040S100-1	Q15B	0.73
	C25-5R30-250-2T	2	A	30	20	25	35	-	250	RPMT10T3	M040S100-1	YS-43	M040S100-1	Q15B	0.91
	C32-5R35-160-2T	2	A	35	25	32	48	-	160	RPMT10T3	M040S100-1	YS-43	M040S120	Q15B	0.94
	C32-5R35-200-2T	2	A	35	25	32	48	-	200	RPMT10T3	M040S100-1	YS-43	M040S120	Q15B	1.18
	C32-5R35-250-2T	2	A	35	25	32	48	-	250	RPMT10T3	M040S100-1	YS-43	M040S120	Q15B	1.50
	C32-5R35-300-2T	2	A	35	25	32	48	-	300	RPMT10T3	M040S100-1	YS-43	M040S120	Q15B	1.81
	C32-5R35-350-2T	2	A	35	25	32	48	-	350	RPMT10T3	M040S100-1	YS-43	M040S120	Q15B	2.11
	C32-5R35-160-3T	3	A	35	25	32	48	-	160	RPMT10T3	M040S100-1	YS-43	M040S120	Q15B	0.92
	C32-5R35-200-3T	3	A	35	25	32	48	-	200	RPMT10T3	M040S100-1	YS-43	M040S120	Q15B	1.17
	C32-5R35-250-3T	3	A	35	25	32	48	-	250	RPMT10T3	M040S100-1	YS-43	M040S120	Q15B	1.48
	C32-5R35-300-3T	3	A	35	25	32	48	-	300	RPMT10T3	M040S100-1	YS-43	M040S120	Q15B	1.79
	C32-5R35-350-3T	3	A	35	25	32	48	-	350	RPMT10T3	M040S100-1	YS-43	M040S120	Q15B	2.12
EMRT-	C15-4R16-160-2T	2	A	16	8	15	40	-	160	RPMT08T2	M030Y070-1	YS-34	M030Y070-1	Q08B	0.20
	C15-4R16-200-2T	2	A	16	8	15	40	100	200	RPMT08T2	M030Y070-1	YS-34	M030Y070-1	Q08B	0.26
	C16-4R17-160-2T	2	A	17	9	16	40	-	160	RPMT08T2	M030Y070-1	YS-34	M030Y070-1	Q08B	0.21
	C16-4R17-200-2T	2	A	17	9	16	40	100	200	RPMT08T2	M030Y070-1	YS-34	M030Y070-1	Q08B	0.29
	C19-4R20-160-2T	2	A	20	12	19	60	-	160	RPMT08T2	M030Y070-1	YS-34	M030Y070-1	Q08B	0.30
	C19-4R20-200-2T	2	A	20	12	19	70	100	200	RPMT08T2	M030Y070-1	YS-34	M030Y070-1	Q08B	0.41
	C20-4R21-160-2T	2	A	21	13	20	60	-	160	RPMT08T2	M030Y070-1	YS-34	M030Y070-1	Q08B	0.33
	C20-4R21-200-2T	2	A	21	13	20	70	100	200	RPMT08T2	M030Y070-1	YS-34	M030Y070-1	Q08B	0.46
	C24-5R25-160-2T	2	A	25	15	24	60	-	160	RPMT10T3	M040S080-1	YS-43	M040S100-1	Q15B	0.51
	C24-5R25-200-2T	2	A	25	15	24	70	100	200	RPMT10T3	M040S080-1	YS-43	M040S100-1	Q15B	0.65
	C24-5R25-250-2T	2	A	25	15	24	80	115	250	RPMT10T3	M040S080-1	YS-43	M040S100-1	Q15B	0.82

適用 Suitable:德克刀片、三菱刀片 DEREK Or MITSUBISHI Insert

捨弃式切削刀具 MILLING CUTTERS
可換式銑刀頭 Screwed on Milling Cutter
可轉位銑刀杆 Indexable Milling Cutter
倒角刀 Chamfering Cutter
可轉位面銑刀 Indexable Face Mill
鋁合金面銑刀 Aluminum Face Mill
玉米銑刀 Shell Mill
三面刃側銑刀 Side Cutter

TRS

TRS Indexable Milling Cutter
TRS捨弃式端銑刀





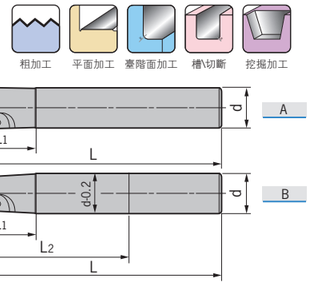

型號 Specification		刃數 Teeth	圖示 Fig	D	DS	d	L_1	L_2	L	刀片 Insert	刀片螺釘 Insert screw	壓板 Clamp	壓板螺釘 Clamp Screw	旗形扳手 Wrench	重量 Weight
TRS-	C12-4R12-130-1T	1	A	12	4	12	35	-	130	RDMT0802	M030Y060	-	-	Q08B	0.10
	C16-4R16-160-2T	2	A	16	8	16	50	-	160	RDMT0802	M030Y070-1	YS-34	M030Y070-1	Q08B	0.23
	C16-4R16-200-2T	2	B	16	8	16	50	100	200	RDMT0802	M030Y070-1	YS-34	M030Y070-1	Q08B	0.29
	C20-4R20-160-2T	2	A	20	12	20	60	-	160	RDMT0802	M030Y070-1	YS-34	M030Y070-1	Q08B	0.35
	C20-4R20-200-2T	2	B	20	12	20	70	100	200	RDMT0802	M030Y070-1	YS-34	M030Y070-1	Q08B	0.34
	C20-5R20-160-2T	2	A	20	10	20	60	-	160	RDMT10T3	M040R080-2	YS-39	M035T085	Q15B	0.35
	C20-5R20-200-2T	2	B	20	10	20	70	100	200	RDMT10T3	M040R080-2	YS-39	M035T085	Q15B	0.44
	C20-5R25-160-2T	2	A	25	15	20	40	-	160	RDMT10T3	M040R080-2	YS-43	M040S100-1	Q15B	0.26
	C20-5R25-200-2T	2	A	25	15	20	40	-	200	RDMT10T3	M040R080-2	YS-43	M040S100-1	Q15B	0.46
	C25-5R25-160-2T	2	A	25	15	25	60	-	160	RDMT10T3	M040R080-2	YS-43	M040S100-1	Q15B	0.54
	C25-5R25-200-2T	2	B	25	15	25	70	100	200	RDMT10T3	M040R080-2	YS-43	M040S100-1	Q15B	0.69
	C25-5R25-250-2T	2	B	25	15	25	80	150	250	RDMT10T3	M040R080-2	YS-43	M040S100-1	Q15B	0.87
	C25-5R30-160-2T	2	A	30	20	25	40	-	160	RDMT10T3	M040R080-2	YS-43	M040S100-1	Q15B	0.57
	C25-5R30-200-2T	2	A	30	20	25	40	-	200	RDMT10T3	M040R080-2	YS-43	M040S100-1	Q15B	0.72
	C25-5R30-250-2T	2	A	30	20	25	40	-	250	RDMT10T3	M040R080-2	YS-43	M040S100-1	Q15B	0.91
	C32-5R35-160-3T	3	A	35	25	32	48	-	160	RDMT10T3	M040R090	YS-43	M040S120	Q15B	0.91
	C32-5R35-200-3T	3	A	35	25	32	48	-	200	RDMT10T3	M040R090	YS-43	M040S120	Q15B	1.16
	C32-5R35-250-3T	3	A	35	25	32	48	-	250	RDMT10T3	M040R090	YS-43	M040S120	Q15B	1.48
	C32-5R35-300-3T	3	A	35	25	32	48	-	300	RDMT10T3	M040R090	YS-43	M040S120	Q15B	1.79
	C32-5R35-350-3T	3	A	35	25	32	48	-	350	RDMT10T3	M040R090	YS-43	M040S120	Q15B	2.10
	C25-6R32-160-2T	2	A	32	20	25	48	-	160	RDMT1204	M040R100-2	YS-43	M040S120	Q15B	0.94
	C25-6R32-200-2T	2	A	32	20	25	48	-	200	RDMT1204	M040R100-2	YS-43	M040S120	Q15B	1.19
	C25-6R32-250-2T	2	A	32	20	25	48	-	250	RDMT1204	M040R100-2	YS-43	M040S120	Q15B	1.50
	C32-6R32-160-2T	2	A	32	20	32	48	-	160	RDMT1204	M040R100-2	YS-43	M040S120	Q15B	0.96
	C32-6R32-200-2T	2	A	32	20	32	48	-	200	RDMT1204	M040R100-2	YS-43	M040S120	Q15B	1.22
	C32-6R32-250-2T	2	A	32	20	32	48	-	250	RDMT1204	M040R100-2	YS-43	M040S120	Q15B	1.55
	C32-6R32-300-2T	2	A	32	20	32	48	-	300	RDMT1204	M040R100-2	YS-43	M040S120	Q15B	1.91
	C32-6R40-160-3T	3	A	40	28	32	48	-	160	RDMT1204	M040R100-2	YS-43	M040S120	Q15B	0.88
	C32-6R40-200-3T	3	A	40	28	32	48	-	200	RDMT1204	M040R100-2	YS-43	M040S120	Q15B	1.19
	C32-6R40-250-3T	3	A	40	28	32	48	-	250	RDMT1204	M040R100-2	YS-43	M040S120	Q15B	1.49

適用 Suitable:德克刀片、日立刀片 DEREK Or HITACHI Insert

轉下頁
See next page

TRS
TRS Indexable Milling Cutter
TRS捨弃式端銑刀

特殊型號 Special specification

型號 Specification		刃數 Teeth	圖示 Fig	D	DS	d	L_1	L	刀片 Insert	刀片螺釘 Insert screw	壓板 Clamp	壓板螺釘 Clamp Screw	旗形扳手 Wrench	重量 Weight
TRS-	C15-4R16-160-2T	2	A	16	8	15	50	160	RDMT0802	M030Y070-1	YS-34	M030Y070-1	Q08B	0.20
	C15-4R16-200-2T	2	A	16	8	15	50	200	RDMT0802	M030Y070-1	YS-34	M030Y070-1	Q08B	0.26
	C16-4R17-160-2T	2	A	17	9	16	50	160	RDMT0802	M030Y070-1	YS-34	M030Y070-1	Q08B	0.23
	C16-4R17-200-2T	2	A	17	9	16	50	200	RDMT0802	M030Y070-1	YS-34	M030Y070-1	Q08B	0.30
	C19-4R20-160-2T	2	A	20	12	19	60	160	RDMT0802	M030Y070-1	YS-34	M030Y070-1	Q08B	0.30
	C19-4R20-200-2T	2	A	20	12	19	70	200	RDMT0802	M030Y070-1	YS-34	M030Y070-1	Q08B	0.41
	C20-4R21-160-2T	2	A	21	13	20	60	160	RDMT0802	M030Y070-1	YS-34	M030Y070-1	Q08B	0.35
	C20-4R21-200-2T	2	A	21	13	20	70	200	RDMT0802	M030Y070-1	YS-34	M030Y070-1	Q08B	0.45
	C24-5R25-160-2T	2	A	25	15	24	60	160	RDMT10T3	M040R080-2	YS-43	M040S100-1	Q15B	0.50
	C24-5R25-200-2T	2	A	25	15	24	70	200	RDMT10T3	M040R080-2	YS-43	M040S100-1	Q15B	0.64
	C24-5R25-250-2T	2	A	25	15	24	80	250	RDMT10T3	M040R080-2	YS-43	M040S100-1	Q15B	0.82
	C25-5R26-160-2T	2	A	26	16	25	60	160	RDMT10T3	M040R080-2	YS-43	M040S100-1	Q15B	0.54
	C25-5R26-200-2T	2	A	26	16	25	70	200	RDMT10T3	M040R080-2	YS-43	M040S100-1	Q15B	0.70
	C25-5R26-250-2T	2	A	26	16	25	80	250	RDMT10T3	M040R080-2	YS-43	M040S100-1	Q15B	0.89

適用 Suitable:德克刀片、日立刀片 DEREK Or HITACHI Insert

捨弃式切削刀具 MILLING CUTTERS
可換式銑刀頭 Screwed on Milling Cutter
可轉位銑刀杆 Indexable Milling Cutter
倒角刀 Chamfering Cutter
可轉位面銑刀 Indexable Face Mill
鋁合金面銑刀 Aluminum Face Mill
玉米銑刀 Shell Mill
三面刃側銑刀 Side Cutter

RCF

RCF Ball-nose Indexable Cutter For Roughing
RCF球形中粗刀





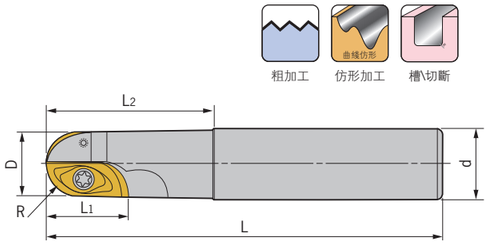

型號 Specification	刃數 Teeth	R	D	d	L1	L2	L	刀片 Insert	刀片螺釘 Insert screw	旗形扳手 Wrench	重量 Weight
RCF- C20-10R-160-2T	2	10	20	20	18	60	160			Q08B	0.30
C20-10R-200-2T	2	10	20	20	18	70	200			Q08B	0.45
C25-10R-160-2T	2	10	20	25	18	60	160			Q08B	0.55
C25-10R-200-2T	2	10	20	25	18	70	200	ZCEW100CE ZCEW100SE	M030D075 M030D095	Q08B	0.65
C25-10R-250-2T	2	10	20	25	18	80	250			Q08B	0.75
C32-10R-250-2T	2	10	20	32	18	90	250			Q08B	1.10
C32-10R-300-2T	2	10	20	32	18	110	300			Q08B	1.30
C25-12.5R-160-2T	2	12.5	25	25	23	60	160			Q15B	0.55
C25-12.5R-200-2T	2	12.5	25	25	18	70	200			Q15B	0.70
C32-12.5R-200-2T	2	12.5	25	32	23	80	200	ZCEW125CE ZCEW125SE	M040D080-3 M040D110-3	Q15B	0.90
C32-12.5R-250-2T	2	12.5	25	32	23	90	250			Q15B	1.20
C32-12.5R-300-2T	2	12.5	25	32	23	110	300			Q15B	1.45
C32-15R-160-2T	2	15	30	32	28	60	160			Q20B	0.80
C32-15R-200-2T	2	15	30	32	28	70	200			Q20B	1.10
C32-15R-250-2T	2	15	30	32	28	80	250	ZCEW150CE ZCEW150SE	M050D120-3	Q20B	1.40
C32-15R-300-2T	2	15	30	32	28	110	300			Q20B	1.70
C32-15R-350-2T	2	15	30	32	28	110	350			Q20B	2.00

適用 Suitable:日立刀片 HITACHI Insert

RCFL

RCFL Ball-nose Indexable Cutter For Roughing
RCFL球形中粗刀





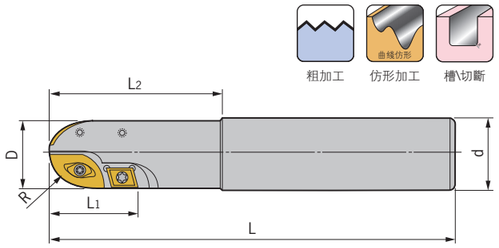

型號 Specification	刃數 Teeth	R	D	d	L1	L2	L	刀片 Insert	刀片螺釘 Insert screw	旗形扳手 Wrench	重量 Weight
RCFL- C20-10R-160-4T	4	10	20	20	18	60	160			Q08B	0.35
C20-10R-200-4T	4	10	20	20	18	70	200			Q08B	0.45
C25-10R-160-4T	4	10	20	25	18	60	160			Q08B	0.50
C25-10R-200-4T	4	10	20	25	18	70	200	ZCEW100CE ZCEW100SE CPMT080204	M030D095 M030D075 M025D060	Q08B	0.65
C25-10R-250-4T	4	10	20	25	18	80	250			Q08B	0.75
C32-10R-250-4T	4	10	20	32	18	115	250			Q08B	1.15
C32-10R-300-4T	4	10	20	32	18	115	300			Q08B	1.40
C25-12.5R-160-4T	4	12.5	25	25	23	60	160			Q15B	0.50
C25-12.5R-200-4T	4	12.5	25	25	18	70	200			Q15B	0.70
C32-12.5R-160-4T	4	12.5	25	32	23	70	160	ZCEW125CE ZCEW125SE CPMT090308	M040D110-3 M040D080-3	Q15B	0.60
C32-12.5R-200-4T	4	12.5	25	32	23	80	200			Q15B	0.90
C32-12.5R-250-4T	4	12.5	25	32	23	90	250			Q15B	1.20
C32-12.5R-300-4T	4	12.5	25	32	23	105	300			Q15B	1.45
C32-15R-160-4T	4	15	30	32	28	60	160			Q15B/Q20B	0.85
C32-15R-200-4T	4	15	30	32	28	70	200			Q15B/Q20B	1.10
C32-15R-250-4T	4	15	30	32	28	80	250	ZCEW150CE ZCEW150SE CPMT090308	M050D120-3 M040D080-3	Q15B/Q20B	1.40
C32-15R-300-4T	4	15	30	32	28	100	300			Q15B/Q20B	1.70
C32-15R-350-4T	4	15	30	32	28	100	350			Q15B/Q20B	2.00

適用 Suitable:日立刀片 HITACHI Insert

BF

BF Ball-nose Milling Cutter For Finishing
BF球頭精加工立銑刀





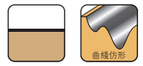

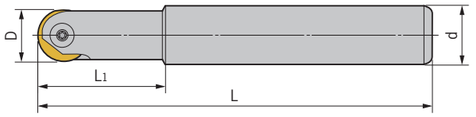

型號 Specification	D	d	L_1	L	刀片 Insert	刀片螺釘 Insert screw	扳手 Wrench	重量 Weight
BF- C12-4R-100-1T	8	12	25	100	P3200-D08	M030W070-4R	Q08B	0.10
C12-4R-130-1T	8	12	25	130	P3200-D08	M030W070-4R	Q08B	0.10
C12-4R-160-1T	8	12	30	160	P3200-D08	M030W070-4R	Q08B	0.12
C10-5R-100-1T	10	10	30	100	P3200-D10	M040W090-5R	Q15B	0.05
C12-5R-130-1T	10	12	30	130	P3200-D10	M040W090-5R	Q15B	0.10
C12-5R-160-1T	10	12	35	160	P3200-D10	M040W090-5R	Q15B	0.12
C12-6R-130-1T	12	12	30	130	P3200-D12	M050W090-6R	Q20B	0.10
C12-6R-160-1T	12	12	30	160	P3200-D12	M050W090-6R	Q20B	0.15
C16-6R-160-1T	12	16	30	160	P3200-D12	M050W090-6R	Q20B	0.13
C16-8R-120-1T	16	16	30	120	P3200-D16	M050W130-8R	Q20B	0.23
C16-8R-160-1T	16	16	30	160	P3200-D16	M050W130-8R	Q20B	0.20
C16-8R-180-1T	16	16	35	180	P3200-D16	M050W130-8R	Q20B	0.26
C16-8R-200-1T	16	16	45	200	P3200-D16	M050W130-8R	Q20B	0.29
C20-10R-160-1T	20	20	30	160	P3200-D20	M050W170-10R	Q20B	0.35
C20-10R-200-1T	20	20	35	200	P3200-D20	M050W170-10R	Q20B	0.45
C25-10R-160-1T	20	25	30	160	P3200-D20	M050W170-10R	Q20B	0.44
C25-10R-200-1T	20	25	60	200	P3200-D20	M050W170-10R	Q20B	0.62
C25-10R-250-1T	20	25	50	250	P3200-D20	M050W170-10R	Q20B	0.80
C25-12.5R-160-1T	25	25	35	160	P3202-D25	M060W210-12.5R	T30M	0.54
C25-12.5R-200-1T	25	25	40	200	P3202-D25	M060W210-12.5R	T30M	0.70
C25-12.5R-250-1T	25	25	60	250	P3202-D25	M060W210-12.5R	T30M	0.88
C32-12.5R-200-1T	25	32	50	200	P3202-D25	M060W210-12.5R	T30M	0.91
C32-12.5R-250-1T	25	32	85	250	P3202-D25	M060W210-12.5R	T30M	1.01
C32-16R-200-1T	32	32	55	200	P3201-D32	M080W250-16R	T30M	1.13
C32-16R-250-1T	32	32	70	250	P3201-D32	M080W250-16R	T30M	1.44
C32-16R-300-1T	32	32	80	300	P3201-D32	M080W250-16R	T30M	1.77

適用 Suitable:戴杰刀片、瓦爾特刀片 DIJET Or WALTER Insert

特 點 / Feature

■切削能力及精準度均佳，排削良好，高速切削亦穩定，同一片刀片有很寬的應用範圍。它鋒利的切削刃很容易切削淬硬到HRC60鋼以及不銹鋼球墨鑄鐵、鋁、鋅合金和石墨，應用于造模具用的材料的精加工以及航空工業內的燃汽輪機葉片的制造。

■Good cutting capability and precision, good capability for removing the metal chips and cutting . Steadily with high speed.One insert can be used in vast area.The sharp blade is easy to cutting steel, stainless steel, cast iron, aluminum etc.

300R/400R

300R/400R High Speed Indexable End Mill
300R/400R直角高速端銑刀





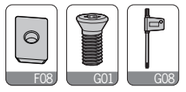

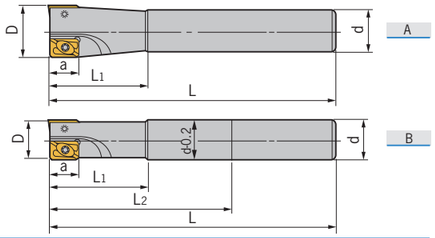

型號 Specification	刃數 Teeth	圖示 Fig	D	d	a	L_1	L_2	L	刀片 Insert	刀片螺釘 Insert screw	旗形扳手 Wrench	重量 Weight
300R- C10-10-100-1T	1	A	10	10	9	25	-	100	APMT1135	M025W050	Q08B	0.05
C10-10-130-1T	1	A	10	10	9	25	-	130	APMT1135	M025W050	Q08B	0.06
C12-12-130-1T	1	A	12	12	9	30	-	130	APMT1135	M025W050	Q08B	0.10
C16-16-120-2T	2	A	16	16	9	40	-	120	APMT1135	M025W060	Q08B	0.17
C16-16-160-2T	2	A	16	16	9	50	-	160	APMT1135	M025W060	Q08B	0.23
C16-16-180-2T	2	B	16	16	9	60	90	180	APMT1135	M025W060	Q08B	0.26
C16-16-200-2T	2	B	16	16	9	60	100	200	APMT1135	M025W060	Q08B	0.29
C20-20-120-2T	2	A	20	20	9	50	-	120	APMT1135	M025W060	Q08B	0.26
C20-20-160-2T	2	A	20	20	9	60	-	160	APMT1135	M025W060	Q08B	0.36
C20-20-200-2T	2	B	20	20	9	70	100	200	APMT1135	M025W060	Q08B	0.46
400R- C25-25-160-2T	2	A	25	25	14	70	-	160	APMT1604	M040S080-1	Q15B	0.55
C25-25-200-2T	2	B	25	25	14	70	100	200	APMT1604	M040S080-1	Q15B	0.70
C25-25-250-2T	2	B	25	25	14	80	115	250	APMT1604	M040S080-1	Q15B	0.89
C25-25-300-2T	2	B	25	25	14	80	165	300	APMT1604	M040S080-1	Q15B	1.07
C25-30-160-2T	2	A	30	25	14	48	-	160	APMT1604	M040S100-1	Q15B	0.81
C25-30-200-2T	2	B	30	25	14	48	100	200	APMT1604	M040S100-1	Q15B	1.11
C25-30-250-2T	2	B	30	25	14	48	115	250	APMT1604	M040S100-1	Q15B	1.42
C32-32-160-2T	2	A	32	32	14	48	-	160	APMT1604	M040S100-1	Q15B	0.86
C32-32-200-2T	2	B	32	32	14	48	100	200	APMT1604	M040S100-1	Q15B	1.16
C32-32-250-2T	2	B	32	32	14	48	115	250	APMT1604	M040S100-1	Q15B	1.47
C32-32-300-2T	2	B	32	32	14	48	165	300	APMT1604	M040S100-1	Q15B	1.77
C32-35-160-2T	2	A	35	32	14	48	-	160	APMT1604	M040S100-1	Q15B	0.95
C32-35-200-2T	2	A	35	32	14	48	-	200	APMT1604	M040S100-1	Q15B	1.20
C32-35-250-2T	2	A	35	32	14	60	-	250	APMT1604	M040S100-1	Q15B	1.51
C32-35-300-2T	2	A	35	32	14	60	-	300	APMT1604	M040S100-1	Q15B	1.83
C32-35-160-3T	3	A	35	32	14	60	-	160	APMT1604	M040S100-1	Q15B	0.94
C32-35-200-3T	3	A	35	32	14	60	-	200	APMT1604	M040S100-1	Q15B	1.20
C32-35-250-3T	3	A	35	32	14	60	-	250	APMT1604	M040S100-1	Q15B	1.51
C32-35-300-3T	3	A	35	32	14	60	-	300	APMT1604	M040S100-1	Q15B	1.82
C32-35-350-3T	3	A	35	32	14	60	-	350	APMT1604	M040S100-1	Q15B	2.13
C32-35-400-3T	3	A	35	32	14	60	-	400	APMT1604	M040S100-1	Q15B	2.46
C32-35-450-3T	3	A	35	32	14	60	-	450	APMT1604	M040S100-1	Q15B	2.78
C32-35-500-3T	3	A	35	32	14	60	-	500	APMT1604	M040S100-1	Q15B	3.07
C32-40-160-3T	3	A	40	32	14	60	-	160	APMT1604	M040S100-1	Q15B	1.10
C32-40-200-3T	3	A	40	32	14	60	-	200	APMT1604	M040S100-1	Q15B	1.24
C32-40-250-3T	3	A	40	32	14	60	-	250	APMT1604	M040S100-1	Q15B	1.55
C32-40-300-3T	3	A	40	32	14	60	-	300	APMT1604	M040S100-1	Q15B	1.88

適用 Suitable:德克刀片、三菱刀片 DEREK Or MITSUBISHI Insert

特 點 / Feature

■本刀適合于强力切削。
■回轉及進刀量多于一般銑刀3倍。
■For heavy-duty cutting.
■Two more times of R.P.M and cutting than general cutters.

轉下頁
See next page

300R/400R

300R/400R High Speed Indexable End Mill
300R/400R直角高速端銑刀





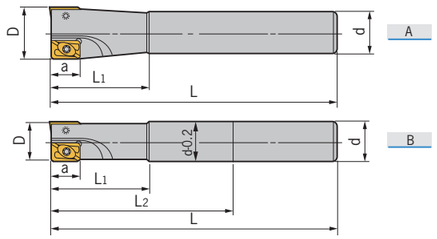

特殊型號 Special size

型號 Specification		刃數 Teeth	圖示 Fig	D	d	a	L_1	L	刀片 Insert	刀片螺釘 Insert screw	旗形扳手 Wrench	重量 Weight
300R-	C12-13-130-1T	1	A	13	12	9	25	130	APMT1135	M025W060	Q08B	0.11
	C15-16-120-2T	2	A	16	15	9	40	120	APMT1135	M025W060	Q08B	0.15
	C15-16-160-2T	2	A	16	15	9	40	160	APMT1135	M025W060	Q08B	0.21
	C15-16-180-2T	2	A	16	15	9	40	180	APMT1135	M025W060	Q08B	0.24
	C15-16-200-2T	2	A	16	15	9	40	200	APMT1135	M025W060	Q08B	0.26
	C15.6-16-160-2T	2	A	16	15.6	9	50	160	APMT1135	M025W060	Q08B	0.22
	C15.6-16-200-2T	2	A	16	15.6	9	50	200	APMT1135	M025W060	Q08B	0.28
	C16-17-120-2T	2	A	17	16	9	50	120	APMT1135	M025W060	Q08B	0.17
	C16-17-160-2T	2	A	17	16	9	50	160	APMT1135	M025W060	Q08B	0.24
	C16-17-180-2T	2	A	17	16	9	50	180	APMT1135	M025W060	Q08B	0.27
	C16-17-200-2T	2	A	17	16	9	50	200	APMT1135	M025W060	Q08B	0.30
	C19-20-160-2T	2	A	20	19	9	50	160	APMT1135	M025W060	Q08B	0.33
	C19-20-200-2T	2	A	20	19	9	50	200	APMT1135	M025W060	Q08B	0.42
	C20-21-160-2T	2	A	21	20	9	50	160	APMT1135	M025W060	Q08B	0.39
	C20-21-200-2T	2	A	21	20	9	50	200	APMT1135	M025W060	Q08B	0.47
400R-	C24-25-160-2T	2	A	25	24	14	50	160	APMT1604	M040S080-1	Q15B	0.51
	C24-25-200-2T	2	A	25	24	14	50	200	APMT1604	M040S080-1	Q15B	0.65
	C24-25-250-2T	2	A	25	24	14	50	250	APMT1604	M040S080-1	Q15B	0.83
	C25-26-160-2T	2	A	26	25	14	50	160	APMT1604	M040S080-1	Q15B	0.56
	C25-26-200-2T	2	A	26	25	14	50	200	APMT1604	M040S080-1	Q15B	0.71
	C25-26-250-2T	2	A	26	25	14	50	250	APMT1604	M040S080-1	Q15B	0.90

適用 Suitable:德克刀片、三菱刀片 DEREK Or MITSUBISHI Insert

工件材料 Work Piece	硬度 Hardness	切削速度 Cutting speed	每齒進給量FZ(mm/齒) Feed
軟鋼Mild steel	＜180HB	120-200	0.05-0.2
碳素鋼Carbon steel	180-280HB	100-200	0.05-0.25
合金鋼Alloy steel	280-350HB	80-160	0.05-0.25
高硬度鋼Hardened steel	＞40HRC	50-100	0.05-0.15
不銹鋼Stainless steel	＜200HB	80-160	0.05-0.25
普通鑄鐵FC250	Flex strength＜350N/mm²	100-160	0.1-0.25
＜FCD450 鑄鐵	Flex strength＜450N/mm²	80-140	0.1-0.25
＜FCD500 Cast Iron	Flex strength500-800N/mm²	60-120	0.05-0.25

AJU

AJU Cutter For Centering And Drilling
AJU過中心鑽銑刀



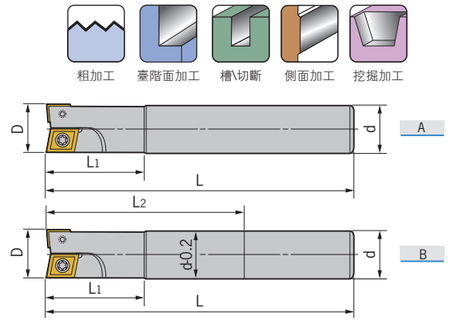

型號 Specification		刃數 Teeth	圖示 Fig	D	d	L_1	L_2	L	刀片型號 Insert	刀片螺釘 Insert screw	旗形扳手 Wrench	重量 Weight
AJU-	C10-10-100-1T	1	A	10	10	30	-	100	CCMT060204	M025W050	Q08B	0.05
	C10-10-130-1T	1	A	10	10	30	-	130	CCMT060204	M025W050	Q08B	0.07
	C12-12-130-1T	1	A	12	12	30	-	130	CPMT080204Z	M025W060	Q08B	0.10
	C16-16-120-2T	2	A	16	16	35	-	120	CCMT060204 CPMT080204Z	M025W060	Q08B	0.20
	C16-16-160-2T	2	A	16	16	35	-	160			Q08B	0.23
	C16-16-180-2T	2	B	16	16	35	90	180			Q08B	0.26
	C16-16-200-2T	2	B	16	16	40	100	200			Q08B	0.29
	C20-20-160-2T	2	A	20	20	50	-	160	CCMT060204	M025W060	Q08B	0.36
	C20-20-200-2T	2	B	20	20	60	100	200	CPMT090204Z	M035R080-1	Q15B	0.45
	C25-25-160-2T	2	A	25	25	60	-	160	CPMT090308 CPMT120308Z	M040R080-2	Q15B	0.54
	C25-25-200-2T	2	B	25	25	70	100	200			Q15B	0.70
	C25-25-250-2T	2	B	25	25	80	115	250			Q15B	0.88
	C32-32-200-2T	2	B	32	32	60	100	200	CPMT120408 120430 CPMT160408Z 160430Z	M050Y110-4	Q20B	1.12
	C32-32-250-2T	2	B	32	32	70	115	250			Q20B	1.41
	C32-32-300-2T	2	B	32	32	80	165	300			Q20B	1.71

適用 Suitable:德克刀片、日立刀片 DEREK Or HITACHI Insert

特殊型號 Special size

型號 Specification		刃數 Teeth	圖示 Fig	D	d	L_1	L	刀片型號 Insert	刀片螺釘 Insert screw	旗形扳手 Wrench	重量 Weight
AJU-	C15-16-120-2T	2	A	16	15	35	120	CCMT060204 CPMT080204Z	M025W060	Q08B	0.15
	C15-16-160-2T	2	A	16	15	35	160			Q08B	0.21
	C15-16-180-2T	2	A	16	15	40	180			Q08B	0.23
	C15-16-200-2T	2	A	16	15	40	200			Q08B	0.26
	C19-20-160-2T	2	A	20	19	35	160	CCMT060204 CPMT090204Z	M025W060 M035R080-1	Q08B	0.33
	C19-20-200-2T	2	A	20	19	40	200			Q15B	0.42
	C24-25-160-2T	2	A	25	24	35	160	CPMT090308 CPMT120308Z	M040R080-2	Q15B	0.51
	C24-25-200-2T	2	A	25	24	35	200			Q15B	0.65
	C24-25-250-2T	2	A	25	24	40	250			Q15B	0.83

適用 Suitable:德克刀片、日立刀片 DEREK Or HITACHI Insert

特 點 / Feature

■從盲孔直式進刀及銑刀橫式進刀加工均無阻力。■使用于模具加工。■切削角=90度。
■Drilling on the plate vertically or milling horizontally processing without resistance.
■For die & mould machining. ■Cutting angle=90°.

TCP

TCP Power Milling Cutter
TCP强力立銑刀







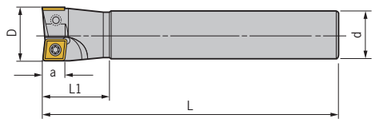

型號 Specification		刃數 Teeth	D	d	a	L_1	L	刀片 Insert	刀片螺釘 Insert screw	旗形扳手 Wrench	重量 Weight
TCP-	C16-16-160-2T	2	16	16	6	50	160	CCMT060204	M025W060	Q08B	0.23
	C16-16-200-2T	2	16	16	6	60	200	CCMT060204	M025W060	Q08B	0.26
	C20-20-160-2T	2	20	20	8	60	160	CPMT080204	M025W060	Q08B	0.35
	C20-20-200-2T	2	20	20	8	70	200	CPMT080204	M025W060	Q08B	0.45
	C25-25-160-2T	2	25	25	9	80	160	CPMT090308	M040R080-2	Q15B	0.55
	C25-25-200-2T	2	25	25	9	70	200	CPMT090308	M040R080-2	Q15B	0.70
	C25-30-160-2T	2	30	25	12	48	160	CPMT120408	M050Y110-4	Q20B	0.53
	C25-30-200-2T	2	30	25	12	48	200	CPMT120408	M050Y110-4	Q20B	0.72
	C25-30-250-2T	2	30	25	12	48	250	CPMT120408	M050Y110-4	Q20B	0.92
	C32-35-160-2T	2	35	32	12	48	160	CPMT120408	M050Y110-4	Q20B	0.86
	C32-35-200-2T	2	35	32	12	48	200	CPMT120408	M050Y110-4	Q20B	1.18
	C32-35-250-2T	2	35	32	12	48	250	CPMT120408	M050Y110-4	Q20B	1.49
	C32-35-160-3T	3	35	32	12	48	160	CPMT120408	M050Y110-4	Q20B	0.94
	C32-35-200-3T	3	35	32	12	48	200	CPMT120408	M050Y110-4	Q20B	1.20
	C32-35-250-3T	3	35	32	12	48	250	CPMT120408	M050Y110-4	Q20B	1.51

適用 Suitable:德克刀片、日立刀片 DEREK Or HITACHI Insert

R390

R390 Indexable End Mill
R390捨弃式端銑刀





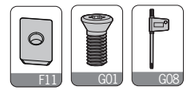

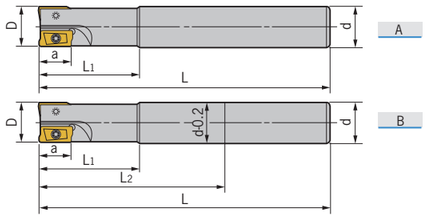

型號 Specification		刃數 Teeth	圖示 Fig	D	d	a	L_1	L_2	L	刀片 Insert	刀片螺釘 Insert screw	旗形扳手 Wrench	重量 Weight
R390-	C15-16-160-2T	2	A	16	15	10	25	-	160	R390-11T308	M025W050	Q08B	0.20
	C15-16-200-2T	2	A	16	15	10	25	-	200	R390-11T308	M025W050	Q08B	0.23
	C15.6-16-160-2T	2	A	16	15.6	10	25	-	160	R390-11T308	M025W050	Q08B	0.22
	C15.6-16-200-2T	2	A	16	15.6	10	25	-	200	R390-11T308	M025W050	Q08B	0.25
	C16-16-160-2T	2	A	16	16	10	25	-	160	R390-11T308	M025W050	Q08B	0.23
	C16-16-180-2T	2	B	16	16	10	25	90	180	R390-11T308	M025W050	Q08B	0.26
	C19-20-160-2T	2	A	20	19	10	25	-	160	R390-11T308	M025W060	Q08B	0.33
	C19-20-180-2T	2	A	20	19	10	25	-	180	R390-11T308	M025W060	Q08B	0.37
	C20-20-160-2T	2	A	20	20	10	25	-	160	R390-11T308	M025W060	Q08B	0.35
	C20-20-200-2T	2	B	20	20	10	25	100	200	R390-11T308	M025W060	Q08B	0.45
	C24-25-160-2T	2	A	25	24	17	50	-	160	R390-170408	M035T085	Q15B	0.51
	C24-25-160-3T	3	A	25	24	17	50	-	160	R390-11T308	M025W060	Q08B	0.51
	C24-25-200-2T	2	A	25	24	17	50	-	200	R390-170408	M035T085	Q15B	0.64
	C24-25-200-3T	3	A	25	24	17	50	-	200	R390-11T308	M025W060	Q08B	0.64
	C24-25-250-2T	2	A	25	24	17	50	-	250	R390-170408	M035T085	Q15B	0.82
	C25-25-160-2T	2	A	25	25	17	60	-	160	R390-170408	M035T085	Q15B	0.55
	C25-25-160-3T	3	A	25	25	17	60	-	160	R390-11T308	M025W060	Q08B	0.55
	C25-25-200-2T	2	B	25	25	17	60	100	200	R390-170408	M035T085	Q15B	0.70
	C25-25-200-3T	3	B	25	25	17	60	100	200	R390-11T308	M025W060	Q08B	0.70
	C25-25-250-2T	2	B	25	25	17	60	100	250	R390-170408	M035T085	Q15B	0.89

適用 Suitable:德克刀片、山特維克刀片 DEREK Or SANDVIK Insert

ATS/ASL

ATS T-Slot Milling Cutter
ATS-T型槽端銑刀

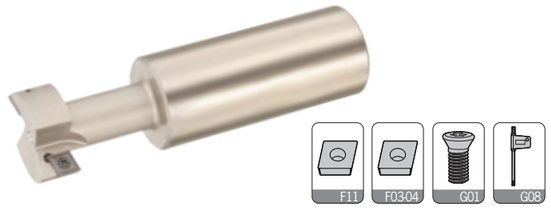

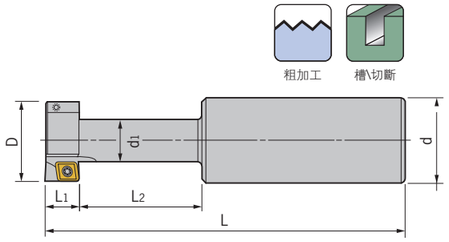

型號 Specification		刃數 Teeth	D	d	d1	L1	L2	L	刀片 Insert	刀片螺釘 Insert screw	旗形扳手 Wrench	重量 Weight
ATS-	C25-25-11-110-2T	2	25	25	12.5	11	21	110	CCMT060204	M025W060	Q08B	0.35
	C32-32-14-120-2T	2	32	32	16	14	30	120	CPMT080204	M025W060	Q08B	0.55
	C32-40-18-130-4T	4	40	32	20	18	32	130	CCMT09T308	M040S100-1	Q15B	0.70
	C32-50-22-140-4T	4	50	32	26	22	39	140	CCMT120408	M050Y110-1	Q20B	0.95

適用 Suitable:德克刀片、日立刀片 DEREK Or HITACHI Insert

ASL Cutter for Drilling And Milling
ASL鑽銑共用型銑刀(短刃型)



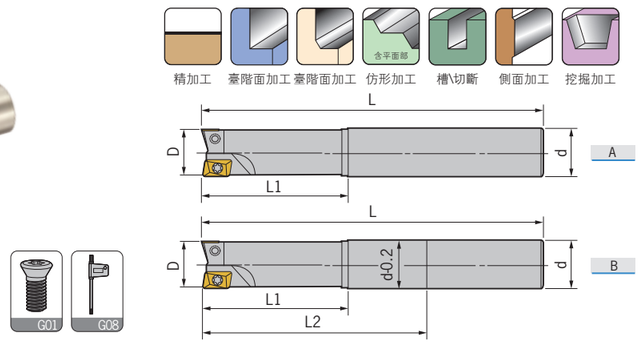

型號 Specification		刃數 Teeth	圖示 Fig	D	d	L1	L2	L	橫刀片 Cross insert	豎刀片 Vertical insert	刀片螺釘 Insert screw	旗形扳手 Wrench	重量 Weight
ASL-	C20-20-160-2T	2	A	20	20	35	-	160	ADMT100308L	ACMT100308R	M025W060	Q08B	0.35
	C20-20-200-2T	2	B	20	20	35	100	200	ADMT100308L	ACMT100308R	M025W060	Q08B	0.45
	C25-25-150-2T	2	A	25	25	40	-	150	ADMT12T308L	ACMT12T308R	M030Y070-2	Q10R	0.55
	C25-25-200-2T	2	B	25	25	40	100	200	ADMT12T308L	ACMT12T308R	M030Y070-2	Q10R	0.75
	C25-25-250-2T	2	B	25	25	40	115	250	ADMT12T308L	ACMT12T308R	M030Y070-2	Q10R	0.95
	C32-32-160-2T	2	A	32	32	50	-	160	ADMT150408L	ACMT150408R	M040S080-1	Q15B	0.90
	C32-32-200-2T	2	B	32	32	50	100	200	ADMT160408L	ACMT160408R	M040S080-1	Q15B	1.25

適用 Suitable:日立刀片 HITACHI Insert

特 點 / Feature

■從盲孔直式鑽或橫式切削。
■底刃刀片角度較大，加工阻力輕。

■Drilling in the vertically difeetion or cutting in the horizontal direction.
■With a big cutting angle of insert,and a light cutting resistance .

ASJ/SKM

ASJ Cutter For Drilling And Milling
ASJ鑽銑共用型銑刀





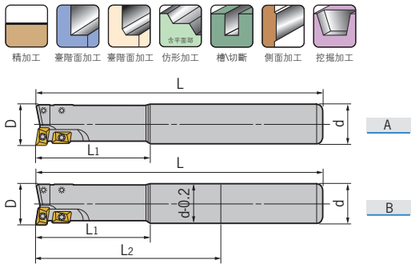

型號 Specification		橫刃 Cross	豎刃 Vertical	圖示 Fig	D	d	L1	L2	L	橫刀片 Cross insert	豎刀片 Vertical insert	刀片螺釘 Insert screw	旗形扳手 Wrench	重量 Weight
ASJ-	C20-20-160-4T	1	3	A	20	20	35	-	160	ADMT100308L	ACMT100308R	M025W060	Q08B	0.35
	C20-20-200-4T	1	3	B	20	20	35	100	200	ADMT100308L	ACMT100308R	M025W060	Q08B	0.45
	C25-25-160-4T	1	3	A	25	25	40	-	160	ADMT12T308L	APMT12T308R	M030Y070-2	Q10R	0.55
	C25-25-200-4T	1	3	B	25	25	40	100	200	ADMT12T308L	APMT12T308R	M030Y070-2	Q10R	0.75
	C25-25-250-4T	1	3	B	25	25	40	115	250	ADMT12T308L	APMT12T308R	M030Y070-2	Q10R	0.95
	C25-25-300-4T	1	3	B	25	25	40	165	300	ADMT12T308L	APMT12T308R	M030Y070-2	Q10R	1.15
	C32-32-160-4T	1	3	A	32	32	50	-	160	APMT160408L	APMT150408R	M040S080-1	Q15B	0.90
	C32-32-200-4T	1	3	B	32	32	50	100	200	APMT160408L	APMT150408R	M040S080-1	Q15B	1.25
	C32-32-250-4T	1	3	B	32	32	50	115	250	APMT160408L	APMT150408R	M040S080-1	Q15B	1.55
	C32-32-300-4T	1	3	B	32	32	50	165	300	APMT160408L	APMT150408R	M040S080-1	Q15B	1.85
	C32-32-350-4T	1	3	B	32	32	50	165	350	APMT160408L	APMT150408R	M040S080-1	Q15B	2.20
	C32-35-160-4T	1	3	A	35	32	50	-	160	APMT170408L	APMT150408R	M040S080-1	Q15B	1.00
	C32-35-200-4T	1	3	A	35	32	50	-	200	APMT170408L	APMT150408R	M040S080-1	Q15B	1.25
	C32-35-250-4T	1	3	A	35	32	50	-	250	APMT170408L	APMT150408R	M040S080-1	Q15B	1.60
	C32-35-300-4T	1	3	A	35	32	50	-	300	APMT170408L	APMT150408R	M040S080-1	Q15B	1.90

適用 Suitable:日立刀片 HITACHI Insert

特 點 / Feature

■從盲孔直式鑽或橫式切削。 ■底刃刀片角度較大，加工阻力輕。 ■刀片爲四刃，可做深粗銑加工。
■Drilling on the plate vertically or cutting horizontally. ■Light cutting resistance. ■For deep roughing.

SKM High-speed Milling Cutter
SKM高速面銑刀



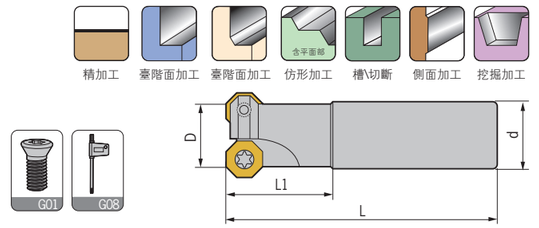

型號 Specification		刃數 Teeth	D	d	L1	L	刀片 Insert	刀片螺釘 Insert screw	旗形扳手 Wrench	重量 Weight
SKM-	C20-25-120-2T	2	25	20	40	120	ODMT040408	M040R100-2	Q15B	0.30
	C25-25-120-2T	2	25	25	40	120	ODMT040408	M040R100-2	Q15B	0.40
	C25-32-120-3T	3	32	25	40	120	ODMT040408	M040R100-2	Q15B	0.50
	C32-32-120-3T	3	32	32	40	120	ODMT040408	M040R100-2	Q15B	0.65
	C32-40-120-4T	4	40	32	50	120	ODMT040408	M040R100-2	Q15B	0.85

適用 Suitable:施特拉姆 STELLRAM Insert

特 點 / Feature

■刀片設計爲八面，使用經濟高效，也可當倒角用。
■For inserts with eight cutting edges, high cost effectiveness,can be use for chamfering.

TP

TP Shoulder Milling Cutter
TP捨弃式直角銑刀







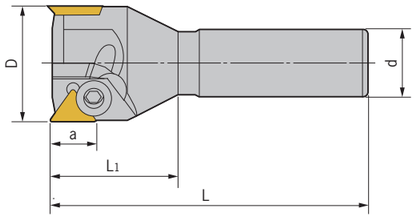

型號 Specification	刃數 Teeth	D	d	a	L_1	L	刀片 Insert	傘形壓板 Umbrella clamp	扳手 Wrench	重量 Weight
TP- **C20-20-90-2T**	2	20	20	9	30	90	TPMN110304	M050H080-TP	L03G	0.20
C20-25-100-2T	2	25	20	9	30	100	TPMN110304	M050H080-TP	L03G	0.24
C20-32-130-2T	2	32	20	14	40	130	TPMN160308	M060H120-TP	L04D	0.30
C20-35-130-2T	2	35	20	14	40	130	TPMN160308	M060H120-TP	L04D	0.37
C20-35-160-2T	2	35	20	14	40	160	TPMN160308	M060H120-TP	L04D	0.45
C20-35-200-2T	2	35	20	14	40	200	TPMN160308	M060H120-TP	L04D	0.55
C25-35-160-2T	2	35	25	14	40	160	TPMN160308	M060H120-TP	L04D	0.60
C25-35-200-2T	2	35	25	14	40	200	TPMN160308	M060H120-TP	L04D	0.80
C32-35-110-2T	2	35	32	14	40	110	TPMN160308	M060H120-TP	L04D	0.65
C32-35-160-2T	2	35	32	14	40	160	TPMN160308	M060H120-TP	L04D	0.95
C32-35-200-2T	2	35	32	14	40	200	TPMN160308	M060H120-TP	L04D	1.18
C20-40-160-3T	3	40	20	14	40	160	TPMN160308	M060H120-TP	L04D	0.46
C25-40-130-3T	3	40	25	14	40	130	TPMN160308	M060H120-TP	L04D	0.60
C25-40-160-3T	3	40	25	14	40	160	TPMN160308	M060H120-TP	L04D	0.80
C25-40-200-3T	3	40	25	14	40	200	TPMN160308	M060H120-TP	L04D	1.00
C32-40-115-3T	3	40	32	14	40	115	TPMN160308	M060H120-TP	L04D	0.72
C32-40-160-3T	3	40	32	14	40	160	TPMN160308	M060H120-TP	L04D	0.96
C32-40-200-3T	3	40	32	14	40	200	TPMN160308	M060H120-TP	L04D	1.21
C20-50-160-3T	3	50	20	14	40	160	TPMN160308	M060H120-TP	L04D	0.60
C25-50-160-3T	3	50	25	14	40	160	TPMN160308	M060H120-TP	L04D	0.79
C25-50-200-3T	3	50	25	14	40	200	TPMN160308	M060H120-TP	L04D	0.98
C32-50-160-3T	3	50	32	14	40	160	TPMN160308	M060H120-TP	L04D	1.09
C32-50-200-3T	3	50	32	14	40	200	TPMN160308	M060H120-TP	L04D	1.31
C20-63-160-3T	3	63	20	20	40	160	TPMN220412	M080H160-TP	L05D	0.70
C25-63-160-3T	3	63	25	20	40	160	TPMN220412	M080H160-TP	L05D	0.85
C32-63-160-3T	3	63	32	20	40	160	TPMN220412	M080H160-TP	L05D	1.22
C32-63-200-3T	3	63	32	20	45	200	TPMN220412	M080H160-TP	L05D	1.65

適用 Suitable:德克刀片、三菱刀片 DEREK Or MITSUBISHI Insert

特點 / Feature

■有效加工模具底部，加工便利。
■用于溝切削，直角肩型切削。
■隅角90度。

■For machining the bottom of die and moulds.
■Slotting and square shoulder cutting.
■Cutting angle:90°.

APE/SPE

APE Shell Mill For Roughing
APE粗切削端銑刀







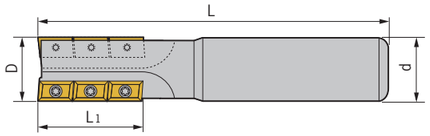

型號 Specification	刃數 Teeth	刀片數 Teeth	D	d	L_1	L	刀片 Insert	刀片螺釘 Insert screw	旗形扳手 Wrench
APE- **C20-20-110-2T**	2	5	20	20	28	110	APKT1003	M025W060	Q08B
C25-25-150-2T	2	8	25	25	37	150	APKT1003	M025W060	Q08B
C32-32-150-3T	3	15	32	32	46	150	APKT1003	M025W060	Q08B

適用 Suitable:森拉天時刀片、施特拉姆刀片 CERATIZIT Or STELLRAM Insert

特點 / Feature

■高剛性設計，適合大切削。 ■High rigidity design, for high-feed cutting.

SPE Shell Mill For Roughing
SPE粗切削端銑刀





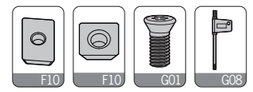

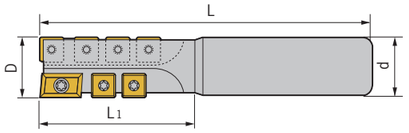

型號 Specification	刃數 Teeth	D	d	L_1	L	T	刀片 Insert	T	刀片 Insert	刀片螺釘 Insert screw	旗形扳手 Wrench
SPE- **C42-40-180-2T**	2	40	42	56	180	1	LPMT1504	5	SPMT1204	M050Y110	Q20B
C32-40-150-4T	4	40	32	50	150	2	P27215-3	12	SDMT090308	M040R090	Q15B
C42-50-200-4T	4	50	42	77	200	2	LPMT1504	14	SPMT1204	M050Y110	Q20B
C42-50-200-4T	4	50	42	97	200	2	LPMT1504	18	SPMT1204	M050Y110	Q20B
C42-50-250-4T	4	50	42	158	250	2	LPMT1504	30	SPMT1204	M050Y110	Q20B
C42-50-200-3T	3	50	42	75	200	-	-	21	SPMT1204	M050Y110	Q20B

適用 SUITABLE:德克刀片 DEREK Insert

CH/TP60°/45°/30°

CH Indexable Cutter For Pocketing
CH螺絲沉頭孔銑刀





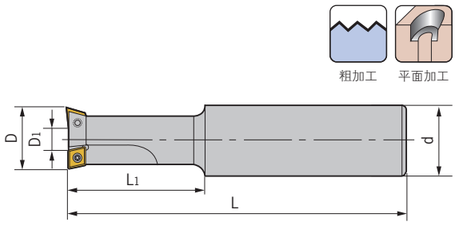

型號 Specification	刃數 Teeth	適用範圍 For	D	D1	d	L1	L	刀片 Insert	刀片螺釘 Insert screw	扳手 Wrench	重量 Weight
CH- C25-14-M8-1T	1	M8	14	2.9	25	21	108	CCMT060204	M025W060	Q08B	0.32
C25-17.5-M10-2T	2	M10	17.5	5.3	25	26	115	CCMT060204	M025W060	Q08B	0.34
C25-20-M12-2T	2	M12	20	7.8	25	30	120	CCMT060204	M025W060	Q08B	0.35
C25-23-M14-2T	2	M14	23	10.8	25	34.5	126	CCMT060204	M025W060	Q08B	0.40
C32-26-M16-2T	2	M16	26	8.5	32	39	132	CPMT090308	M040R080-2	Q15B	0.50
C32-29-M18-2T	2	M18	29	11.5	32	43.5	138	CPMT090308	M040R080-2	Q15B	0.65
C32-32-M20-2T	2	M20	32	14.5	32	59	144	CPMT090308	M040R080-2	Q15B	0.87

適用 Suitable:德克刀片、日立刀片 DEREK Or HITACHI Insert

特 點 / Feature

■把傳統的鑽孔與沉頭加工結合于一體，一次加工完成，大幅提高螺絲沉頭孔的加工效率。
■For drilling and counter -sink machining.Best choice for machining the head of socket screws.

TP60°,45°,30° Chamfering Cutter
TP60度,45度,30度直柄型倒角刀





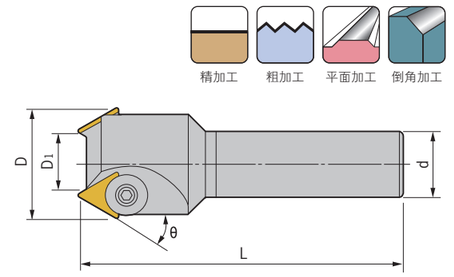

型號 Specification	刃數 Teeth	D	D1	d	L	θ	刀片 Insert	傘形壓板 Umbrella clamp	扳手 Wrench	重量 Weight
TP60- C25-40-120-2T	2	37.7	15.8	25	120	60	TPMN1603	M060H080-TP	L04D	0.55
TP45- C20-20-120-1T	1	20.4	4	20	120	45	TPMN1603	M060H080-TP	L04D	0.27
C20-32-120-2T	2	30.2	12	20	120	45	TPMN1603	M060H080-TP	L04D	0.32
C25-50-160-3T	3	49	24	25	160	45	TPMN2204	M080H120-TP	L05D	0.65
TP30- C25-40-120-2T	2	39	26	25	120	30	TPMN1603	M060H080-TP	L04D	0.53
C32-55-160-3T	3	54.5	36	32	160	30	TPMN2204	M080H120-TP	L05D	0.98

適用 Suitable:德克刀片、三菱刀片 DEREK Or MITSUBISHI Insert

特 點 / Feature

■本刀可30度,45度,60度切削，亦可做倒角。
■適合一般銑床，綜合切削中心機。
■For chamfering different angles 30°,45°and 60°.
■For general milling machine and machine center.

EM45°/SSK45°

EM45° Internal And External Chamfering Cutter
EM45度內外倒角刀





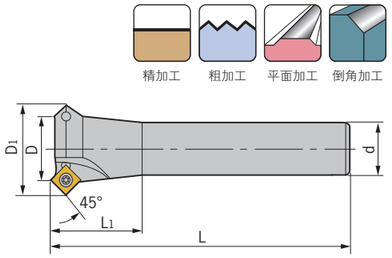

型號 Specification	刃數 Teeth	D	D1	d	L1	L	刀片 Insert	刀片螺釘 Insert screw	旗形扳手 Wrench	重量 Weight
EM45- C3/4-25-110-2T	2	25	38	19.05	35	110	SPMW090304	M040S100-1	Q15B	0.26
C20-25-110-2T	2	25	38	20	35	110	SPMW090304	M040S100-1	Q15B	0.40
C25-25-150-2T	2	25	38	25	35	150	SPMW090304	M040S100-1	Q15B	0.55
C25-30-150-2T	2	30	43	25	35	150	SPMW090304	M040S100-1	Q15B	0.59

適用 Suitable:德克刀片、三菱刀片 DEREK Or MITSUBISHI Insert

特 點 / Feature

■高剛性設計，適合大切削。
■用于切槽，倒角加工，平面銑削。
■刀片形狀爲正方形，使用時可轉位四次，更經濟。
■For high-feed cutting with a high rigidity.
■For slot cutting,chamfering and face milling.
■For inserts with four cutting edges.

SSK45° Chamfering Cutter
SSK45度捨弃式倒角刀





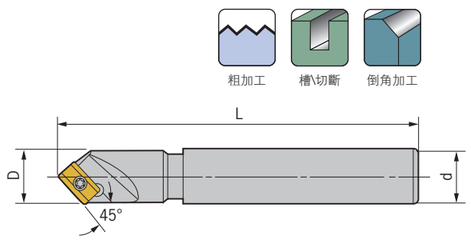

型號 Specification	刃數 Teeth	D	d	L	倒角範圍 Chamfering range	刀片 Insert	刀片螺釘 Insert screw	旗形扳手 Wrench	重量 Weight
SSK- C20-22-130-1T	1	22	20	130	3-20	ADNT160308	M040S080	Q15B	0.30

適用 Suitable:日立刀片 HITACHI Insert

特 點 / Feature

■本銑刀可45度切削，亦可做倒角。
■適合一般銑床，綜合切削中心機。
■Milling with an angle of 45°,and chamfering.
■For general milling machine and machine center.

SSP45°/SB45°

SSP45° Cutter For Centering And Chamfering
SSP45度定位倒角刀







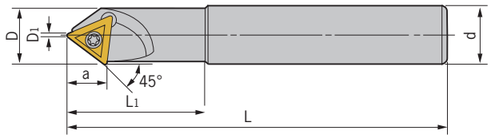

型號 Specification	刃數 Teeth	D	D1	d	a	L1	L	倒角範圍 Chamfering range	刀片 Insert	刀片螺釘 Insert screw	旗形扳手 Wrench	重量 Weight
SSP- C20-20-130-1T	1	20	0	20	11.3	20	130	0-20	TCMX16T308	M040R090	Q15B	0.28

適用 Suitable:施特拉姆刀片 STELLRAM Insert

特 點 / Feature

■本銑刀可45度切削，亦可做倒角，V槽切削，可中心定位鑽使用。
■適合一般銑床，CNC銑床，CNC車床，鑽床倒角。
■Milling with an angle of 45°,chamfering,V-slot cutting and centering.
■For milling machine, CNC milling machine, CNC turning machine and drilling machine.

SB45° Chamfering Cutter
SB45度新型倒角刀







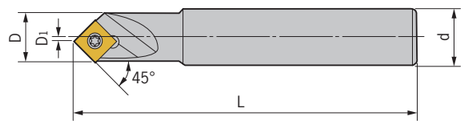

型號 Specification	刃數 Teeth	D	D1	d	L	倒角範圍 Chamfering range	刀片 Insert	刀片螺釘 Insert screw	旗形扳手 Wrench	重量 Weight
SB- C16-16-100-1T	1	16	1.5	16	100	6.5-16	SPMW090304	M040S080-1	Q15B	0.15

適用 Suitable:德克刀片、三菱刀片 DEREK Or MITSUBISHI Insert

特 點 / Feature

■每個刀片具有四個刀刃，經濟耐用。
■倒角，切端面槽。
■Four cutting edges on each insert,with high cost effectiveness.
■Chamfering.



AJX

AJX High-feed Face Mill
AJX大進給面銑刀頭





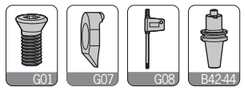

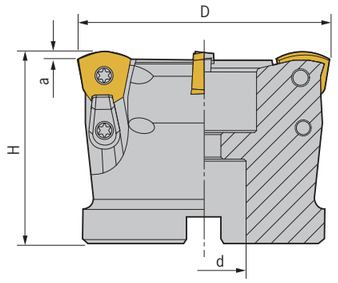

型號 Specification		刃數 Teeth	D	d	a	H	刀片 Insert	刀片螺釘 Insert screw	壓板 Clamp	壓板螺釘 Clamp Screw	旗形扳手 Wrench	重量 Weight
AJX	12-50-22-4T	4	50	22	2	50	JDMW120420	M040R100-2	YD-13	M040S100-1	Q15B	0.40
	12-63-22-4T	4	63	22	2	50	JDMW120420	M040R100-2	YD-13	M040S100-1	Q15B	0.75
	14-63-22-4T	4	63	22	2	50	JDMW140520	M050Y120-2	YD-16	M050Y110-2	Q20B	0.75
	14-80-27-4T	4	80	27	2	50	JDMW140520	M050Y120-2	YD-16	M050Y110-2	Q20B	1.00
	14-80-27-5T	5	80	27	2	50	JDMW140520	M050Y120-2	YD-16	M050Y110-2	Q20B	1.00
	14-100-32-5T	5	100	32	2	63	JDMW140520	M050Y120-2	YD-16	M050Y110-2	Q20B	1.25
	12-50-25.4-4T	4	50	25.4	2	50	JDMW120420	M040R100-2	YD-13	M040S100-1	Q15B	0.40
	12-63-25.4-4T	4	63	25.4	2	50	JDMW120420	M040R100-2	YD-13	M040S100-1	Q15B	0.75
	14-63-25.4-4T	4	63	25.4	2	50	JDMW140520	M050Y120-2	YD-16	M050Y110-2	Q20B	0.75
	14-80-25.4-4T	4	80	25.4	2	50	JDMW140520	M050Y120-2	YD-16	M050Y110-2	Q20B	1.00
	14-80-25.4-5T	5	80	25.4	2	50	JDMW140520	M050Y120-2	YD-16	M050Y110-2	Q20B	1.00
	14-100-31.75-5T	5	100	31.75	2	63	JDMW140520	M050Y120-2	YD-16	M050Y110-2	Q20B	1.20

適用 Suitable:三菱刀片 MITSUBISHI Insert

特 點 / Feature

■最適合大進給切削。 ■For high-feed cutting.

TXP

TXP High-feed Face Mill
TXP大進給面銑刀頭



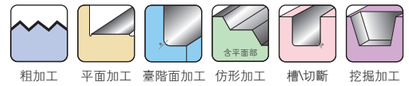

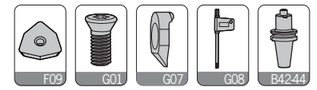

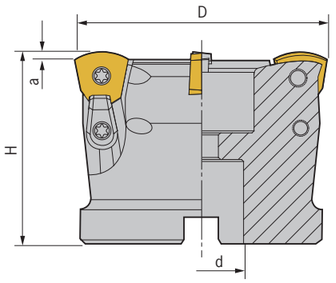

型號 Specification		刃數 Teeth	D	d	a	H	刀片 Insert	刀片螺釘 Insert screw	壓板 Clamp	壓板螺釘 Clamp Screw	旗形扳手 Wrench	重量 Weight
TXP-	50-22-4T	4	50	22	1.5	50	WPMW06X415ZPR	M040S100-1	YD-13	M040S100-1	Q15B	0.40
	63-22-4T	4	63	22	1.5	50	WPMT080615ZPR	M050Y120-1	YD-16	M050Y110-2	Q20B	0.65
	80-27-4T	4	80	27	1.5	50	WPMT080615ZPR	M050Y120-1	YD-16	M050Y110-2	Q20B	1.00
	80-27-5T	5	80	27	1.5	50	WPMT080615ZPR	M050Y120-1	YD-16	M050Y110-2	Q20B	1.00
	100-32-6T	6	100	32	1.5	50	WPMT080615ZPR	M050Y120-1	YD-16	M050Y110-2	Q20B	1.25
	63-25.4-4T	4	63	25.4	1.5	50	WPMT080615ZPR	M050Y120-1	YD-16	M050Y110-2	Q20B	0.65
	80-25.4-4T	4	80	25.4	1.5	50	WPMT080615ZPR	M050Y120-1	YD-16	M050Y110-2	Q20B	1.00
	80-25.4-5T	5	80	25.4	1.5	50	WPMT080615ZPR	M050Y120-1	YD-16	M050Y110-2	Q20B	1.00
	100-31.75-6T	6	100	31.75	1.5	50	WPMT080615ZPR	M050Y120-1	YD-16	M050Y110-2	Q20B	1.20

適用 Suitable:德克刀片、東芝刀片 DEREK Or TUNGALOY Insert

特 點 / Feature

■最適合大進給切削。 ■For high-feed cutting.

SKS

SKS High-feed Face Mill
SKS大進給面銑刀頭

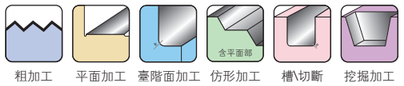





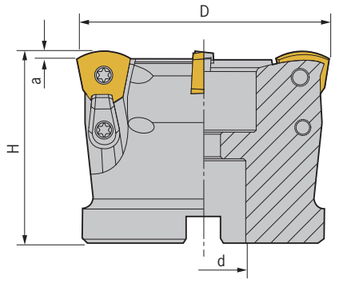

型號 Specification		刃數 Teeth	D	d	a	H	刀片 Insert	刀片螺釘 Insert screw	壓板 Clamp	壓板螺釘 Clamp Screw	旗形扳手 Wrench	重量 Weight
SKS	**08-50-22-4T**	4	50	22	2	50	WDMW080520ZTR WDMT080520ZER WDHW080520ZTR	M045Y110	YD-16	M045Y110	Q20B	0.40
	08-63-22-4T	4	63	22	2	50		M045Y110	YD-16	M045Y110	Q20B	0.65
	08-80-27-5T	5	80	27	2	50		M045Y110	YD-16	M045Y110	Q20B	1.00
	08-100-32-6T	6	100	32	2	55		M045Y110	YD-16	M045Y110	Q20B	1.25
	10-63-22-4T	4	63	22	2.5	50	WDMW10X620ZTR WDMT10X620ZER	M045Y110	YD-16	M045Y110	Q20B	0.65
	10-80-27-4T	4	80	27	2.5	50		M045Y110	YD-16	M045Y110	Q20B	1.00
	10-100-32-5T	5	100	32	2.5	55		M045Y110	YD-16	M045Y110	Q20B	1.25
	08-63-25.4-4T	4	63	25.4	2	50	WDMW080520ZTR WDMT080520ZER WDHW080520ZTR	M045Y110	YD-16	M045Y110	Q20B	0.65
	08-80-25.4-5T	5	80	25.4	2	50		M045Y110	YD-16	M045Y110	Q20B	1.00
	08-100-31.75-6T	6	100	31.75	2	55		M045Y110	YD-16	M045Y110	Q20B	1.20
	10-63-25.4-4T	4	63	25.4	2.5	50	WDMW10X620ZTR WDMT10X620ZER	M045Y110	YD-16	M045Y110	Q20B	0.65
	10-80-25.4-4T	4	80	25.4	2.5	50		M045Y110	YD-16	M045Y110	Q20B	1.00
	10-100-31.75-5T	5	100	31.75	2.5	55		M045Y110	YD-16	M045Y110	Q20B	1.20

適用 Suitable:德克刀片、黛杰刀片 DEREK Or DIJET Insert

特 點 / Feature

■最適合大進給切削。

■Excellent for high-feed cutting.

JRC

JRC Face Milling Cutter
JRC圓刀刃平面銑刀頭

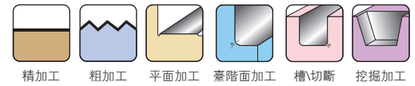



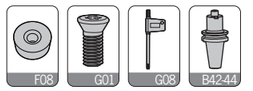

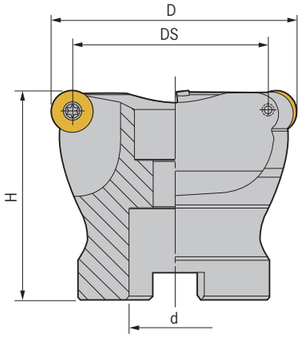

型號 Specification		刃數 Teeth	D	DS	d	H	刀片 Insert	刀片螺釘 Insert screw	壓板 Clamp	壓板螺釘 Clamp Screw	旗形扳手 Wrench	重量 Weight
JRC-	**5R50-22-4T**	4	50	40	22	50	RC＊T10T3	M035T085	-	-	Q15B	0.35
	5R50-25.4-4T	4	50	40	25.4	50	RC＊T10T3	M035T085	-	-	Q15B	0.35
	5R63-22-4T	4	63	53	22	50	RC＊T10T3	M035T085	-	-	Q15B	0.55
	5R63-25.4-4T	4	63	53	25.4	50	RC＊T10T3	M035T085	-	-	Q15B	0.55
	6R50-22-4T	4	50	38	22	50	RC＊T1204	M035T085	-	-	Q15B	0.35
	6R50-22-P-4T	4	50	38	22	50	RC＊T1204	M035T085	YD-14	M035T085	Q15B	0.35
	6R50-25.4-4T	4	50	38	25.4	50	RC＊T1204	M035T085	-	-	Q15B	0.35
	6R63-22-4T	4	63	51	22	50	RC＊T1204	M035T085	-	-	Q15B	0.55
	6R63-22-P-4T	4	63	51	22	50	RC＊T1204	M035T085	YD-14	M035T085	Q15B	0.55
	6R63-25.4-4T	4	63	51	25.4	50	RC＊T1204	M035T085	-	-	Q15B	0.55

適用 Suitable:德克刀片、山特維克刀片 DEREK Or SANDVIK Insert

EMRW

EMRW Face Milling Cutter
EMRW圓刀刃平面銑刀頭







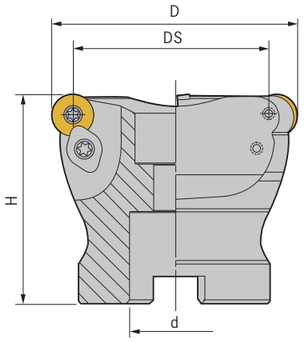

型號 Specification		刃數 Teeth	D	DS	d	H	刀片 Insert	刀片螺釘 Insert screw	壓板 Clamp	壓板螺釘 Clamp Screw	旗形扳手 Wrench	重量 Weight
EMRW-	5R50-22-4T	4	50	40	22	50	RPMW1003	M040S100-1	YS-43	M040S120	Q15B	0.35
	5R50-25.4-4T	4	50	40	25.4	50	RPMW1003	M040S100-1	YS-43	M040S120	Q15B	0.35
	5R63-22-4T	4	63	53	22	50	RPMW1003	M040S100-1	YS-43	M040S120	Q15B	0.55
	5R63-22-5T	5	63	53	22	50	RPMW1003	M040S100-1	YS-43	M040S120	Q15B	0.55
	5R63-25.4-4T	4	63	53	25.4	50	RPMW1003	M040S100-1	YS-43	M040S120	Q15B	0.55
	5R63-25.4-5T	5	63	53	25.4	50	RPMW1003	M040S100-1	YS-43	M040S120	Q15B	0.55
	5R80-27-5T	5	80	70	27	50	RPMW1003	M040S100-1	YS-43	M040S120	Q15B	0.35
	5R100-32-5T	5	100	90	32	50	RPMW1003	M040S100-1	YS-43	M040S120	Q15B	0.30
	5R100-32-6T	6	100	90	32	50	RPMW1003	M040S100-1	YS-43	M040S120	Q15B	0.30
	6R50-22-4T	4	50	38	22	50	RPMW1204	M040S100-1	YS-43	M040S120	Q15B	0.50
	6R50-25.4-4T	4	50	38	25.4	50	RPMW1204	M040S100-1	YS-43	M040S120	Q15B	0.50
	6R63-22-4T	4	63	51	22	50	RPMW1204	M040S100-1	YS-43	M040S120	Q15B	0.75
	6R63-22-5T	5	63	51	22	50	RPMW1204	M040S100-1	YS-43	M040S120	Q15B	0.75
	6R63-25.4-4T	4	63	51	25.4	50	RPMW1204	M040S100-1	YS-43	M040S120	Q15B	0.75
	6R63-25.4-5T	5	63	51	25.4	50	RPMW1204	M040S100-1	YS-43	M040S120	Q15B	0.75
	6R80-25.4-6T	6	80	68	25.4	50	RPMW1204	M040S100-1	YS-43	M040S120	Q15B	0.95
	6R80-27-6T	6	80	68	27	50	RPMW1204	M040S100-1	YS-43	M040S120	Q15B	1.05
	6R100-31.75-6T	6	100	88	31.75	50	RPMW1204	M040S100-1	YS-43	M040S120	Q15B	1.20
	6R100-32-5T	5	100	88	32	50	RPMW1204	M040S100-1	YS-43	M040S120	Q15B	1.25
	6R100-32-6T	6	100	88	32	50	RPMW1204	M040S100-1	YS-43	M040S120	Q15B	1.25

適用 Suitable:德克刀片、三菱刀片 DEREK Or MITSUBISHI Insert

TRS

TRS Face Milling Cutter
TRS圓刀刃平面銑刀頭



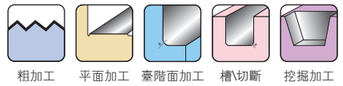

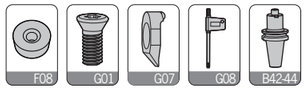

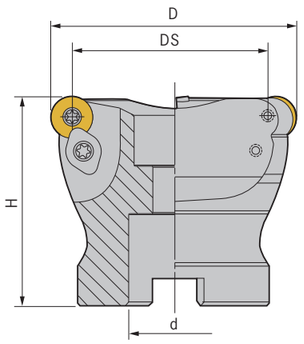

型號 Specification		刃數 Teeth	D	DS	d	H	刀片 Insert	刀片螺釘 Insert screw	壓板 Clamp	壓板螺釘 Clamp Screw	旗形扳手 Wrench	重量 Weight
TRS-	5R50-22-4T	4	50	40	22	50	RDMT10T3	M040R090	YS-43	M040S120	Q15B	0.35
	5R50-25.4-4T	4	50	40	25.4	50	RDMT10T3	M040R090	YS-43	M040S120	Q15B	0.35
	5R63-22-5T	5	63	53	22	50	RDMT10T3	M040R090	YS-43	M040S120	Q15B	0.55
	5R63-25.4-4T	4	63	53	25.4	50	RDMT10T3	M040R090	YS-43	M040S120	Q15B	0.55
	5R63-25.4-5T	5	63	53	25.4	50	RDMT10T3	M040R090	YS-43	M040S120	Q15B	0.55
	6R50-22-4T	4	50	38	22	50	RDMT1204	M040R100-2	YS-43	M040S120	Q15B	0.35
	6R50-25.4-4T	4	50	38	25.4	50	RDMT1204	M040R100-2	YS-43	M040S120	Q15B	0.35
	6R63-22-4T	4	63	51	22	50	RDMT1204	M040R100-2	YS-43	M040S120	Q15B	0.50
	6R63-22-5T	5	63	51	22	50	RDMT1204	M040R100-2	YS-43	M040S120	Q15B	0.50
	6R63-25.4-4T	4	63	51	25.4	50	RDMT1204	M040R100-2	YS-43	M040S120	Q15B	0.51
	6R63-25.4-5T	5	63	51	25.4	50	RDMT1204	M040R100-2	YS-43	M040S120	Q15B	0.51
	6R80-27-6T	6	80	68	27	50	RDMT1204	M040R100-2	YS-43	M040S120	Q15B	0.90
	6R100-32-6T	6	100	88	32	50	RDMT1204	M040R100-2	YS-43	M040S120	Q15B	1.20
	8R63-22-4T	4	63	47	22	50	RDMX1604	M050Y110-1	YS-52	M050Y110-2	Q20B	0.50
	8R63-25.4-4T	4	63	47	25.4	50	RDMX1604	M050Y110-1	YS-52	M050Y110-2	Q20B	0.50
	8R80-25.4-4T	4	80	64	25.4	50	RDMX1604	M050Y110-1	YS-52	M050Y110-2	Q20B	1.15
	8R80-27-5T	5	80	64	27	50	RDMX1604	M050Y110-1	YS-52	M050Y110-2	Q20B	0.85
	8R100-31.75-5T	5	100	84	31.75	50	RDMX1604	M050Y110-1	YS-52	M050Y110-2	Q20B	1.20
	8R100-32-4T	4	100	84	32	50	RDMX1604	M050Y110-1	YS-52	M050Y110-2	Q20B	1.25
	8R100-32-5T	5	100	84	32	50	RDMX1604	M050Y110-1	YS-52	M050Y110-2	Q20B	1.25

適用 Suitable:德克刀片、日立刀片 DEREK Or HITACHI Insert

PE75°/400R

PE75° Face Milling Cutter
PE75度平面銑刀頭





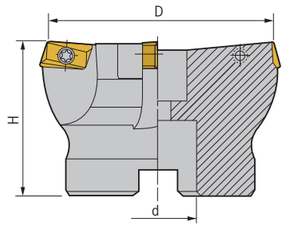

型號 Specification	刃數 Teeth	D	d	H	刀片 Insert	刀片螺釘 Insert screw	旗形扳手 Wrench	重量 Weight
PE- 63-22-4T	4	63	22	50	APMT1604	M040S100-1	Q15B	0.65
63-25.4-4T	4	63	25.4	50	APMT1604	M040S100-1	Q15B	0.70
80-27-5T	5	80	27	50	APMT1604	M040S100-1	Q15B	1.00
80-25.4-5T	5	80	25.4	50	APMT1604	M040S100-1	Q15B	1.25
100-32-5T	5	100	32	50	APMT1604	M040S100-1	Q15B	1.25

適用 Suitable:德克刀片、三菱刀片 DEREK Or MITSUBISHI Insert

400R Square Face Mill
400R直角平面銑刀頭



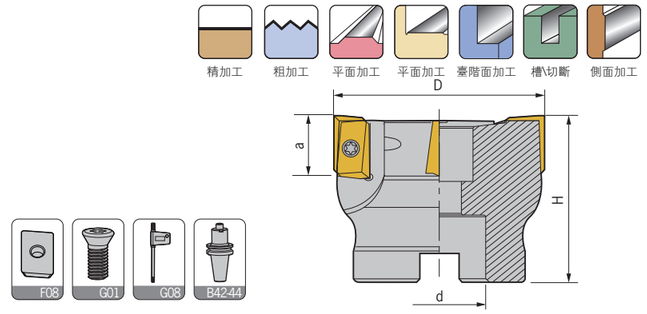

型號 Specification	刃數 Teeth	D	d	a	H	刀片 Insert	刀片螺釘 Insert screw	旗形扳手 Wrench	重量 Weight
400R- 50-22-4T	4	50	22	16	50	APMT1604	M040S100-1	Q15B	0.40
50-25.4-4T	4	50	25.4	16	50	APMT1604	M040S100-1	Q15B	0.40
63-22-4T	4	63	22	16	50	APMT1604	M040S100-1	Q15B	0.65
63-22-5T	5	63	22	16	50	APMT1604	M040S100-1	Q15B	0.65
63-25.4-4T	4	63	25.4	16	50	APMT1604	M040S100-1	Q15B	0.65
63-25.4-5T	5	63	25.4	16	50	APMT1604	M040S100-1	Q15B	0.65
80-25.4-6T	6	80	25.4	16	50	APMT1604	M040S100-1	Q15B	1.00
80-27-6T	6	80	27	16	50	APMT1604	M040S100-1	Q15B	1.00
100-31.75-6T	6	100	31.75	16	50	APMT1604	M040S100-1	Q15B	1.25
100-32-6T	6	100	32	16	50	APMT1604	M040S100-1	Q15B	1.25
125-38.1-8T	8	125	38.1	16	63	APMT1604	M040S100-1	Q15B	3.10
125-40-8T	8	125	40	16	63	APMT1604	M040S100-1	Q15B	3.10
160-40-8T	8	160	40	16	63	APMT1604	M040S100-1	Q15B	5.10
160-50.80-8T	8	160	50.8	16	63	APMT1604	M040S100-1	Q15B	4.80

適用 Suitable:德克刀片、三菱刀片 DEREK Or MITSUBISHI Insert

TP90°

TP90° Square Face Mill
TP90度直角面銑刀頭



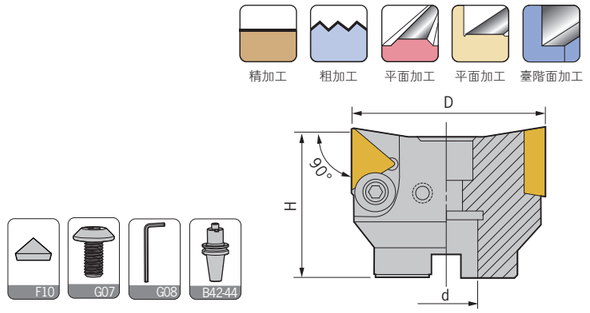

型號 Specification	刃數 Teeth	D	d	H	刀片 Insert	傘形壓板 Clamp	墊片 Washer	墊片螺釘 Screw	L型扳手 Wrench	重量 Weight
TP90- 50-22-3T	3	50	22	50	TPMN1603	M060H120-TP	-	-	L04D	0.40
63-22-3T	3	63	22	50	TPMN2204	M080H160-TP	MT2204	M040S080-1	L05D	0.75
80-27-4T	4	80	27	50	TPMN2204	M080H160-TP	MT2204	M040S080-1	L05D	1.00
100-32-4T	4	100	32	50	TPMN2204	M080H160-TP	MT2204	M040S080-1	L05D	1.25
125-40-6T	6	125	40	63	TPMN2204	M080H160-TP	MT2204	M040S080-1	L05D	2.70

適用 Suitable:德克刀片、三菱刀片 DEREK Or MITSUBISHI Insert



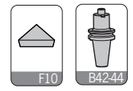

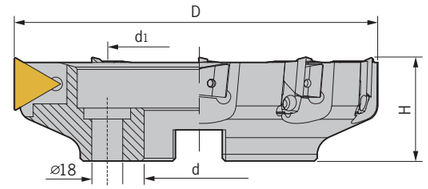

型號 Specification	刃數 Teeth	D	d	d1	H	重量 Weight
TP90- 160-50.8-8T	8	160	50.8	-	63	7.30
200-47.625-10T	10	200	47.625	101.6	63	11.45
250-47.625-12T	12	250	47.625	101.6	63	13.65
300-47.625-14T	14	300	47.625	101.6	63	22.10

型號 Specification	刃數 Teeth	D	d	d1	H	重量 Weight
TP90- 160-40-8T	8	160	40	-	63	7.50
200-60-10T	10	200	60	101.6	63	11.70
250-60-12T	12	250	60	101.6	63	13.90
300-60-14T	14	300	60	101.6	63	22.40

替換零件 Accessories



使用刀片規格 Insert

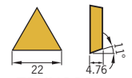

注:祇要更換刀片座,同一個TP刀頭可重復利用。
NOTICE:Maximizes the service life of tool through changing the insert seat only.

特 點 / Feature

■銑削加工，小馬力銑床及M/C加工用。
■隅角90度。
■Can be used in low-powered milling machine and machining center.
■Cutting angle:90°.

FP45°/FP75°

FP45° Face Mill Head
FP45度平面銑刀頭





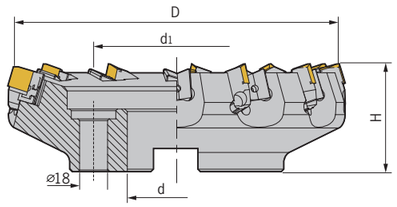

型號 Specification	刃數 Teeth	D	d	d1	H	重量 Weight
FP45- 80-25.4-5T	5	80	25.4	-	50	1.90
100-31.75-5T	5	100	31.75	-	50	2.40
125-38.1-6T	6	125	38.1	-	63	5.50
160-50.8-8T	8	160	50.8	-	63	7.30
200-47.625-10T	10	200	47.625	101.6	63	11.45
250-47.625-12T	12	250	47.625	101.6	63	18.15
300-47.626-14T	14	300	47.625	101.6	63	22.10

型號 Specification	刃數 Teeth	D	d	d1	H	重量 Weight
FP45- 80-27-5T	5	80	27	-	50	2.05
100-32-5T	5	100	32	-	50	2.55
125-40-6T	6	125	40	-	63	5.70
160-40-8T	8	160	40	-	63	7.50
200-60-10T	10	200	60	101.6	63	11.70
250-60-12T	12	250	60	101.6	63	18.35
300-60-14T	14	300	60	101.6	63	22.40

替換零件 Accessories

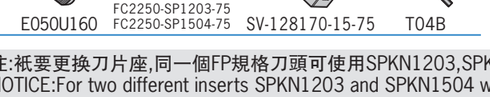

E050U160 | FC2250-SE1203-45 FC2250-SE1504-45 | SV-128170-15-45 | T04B

使用 刀片 規格 Insert specification



SEKN1203 | SEKN1504

注:祇要更換刀片座,同一個FP規格刀頭可使用SEKN1203,SEKN1504二種刀片。 適用:德克刀片
Notice:For two different inserts SEKN1203 and SEKN1504 with suitable inser seats. Suitable: DEREK Insert

FP75° Face Mill Head
FP75度平面銑刀頭



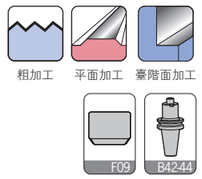

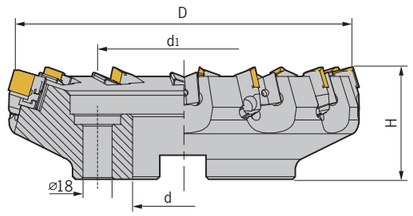

型號 Specification	刃數 Teeth	D	d	d1	H	重量 Weight
FP75- 80-25.4-5T	5	80	25.4	-	50	1.90
100-31.75-6T	6	100	31.75	-	50	2.40
125-38.1-8T	8	125	38.1	-	63	5.50
160-50.8-10T	10	160	50.8	-	63	7.30
200-47.625-12T	12	200	47.625	101.6	63	11.45
250-47.625-14T	14	250	47.625	101.6	63	18.15
300-47.625-16T	16	300	47.625	101.6	63	22.10

型號 Specification	刃數 Teeth	D	d	d1	H	重量 Weight
FP75- 80-27-5T	5	80	27	-	50	2.05
100-32-6T	6	100	32	-	50	2.55
125-40-8T	8	125	40	-	63	5.70
160-40-10T	10	160	40	-	63	7.50
200-60-12T	12	200	60	101.6	63	11.70
250-60-14T	14	250	60	101.6	63	18.35
300-60-16T	16	300	60	101.6	63	22.40

替換零件 Accessories

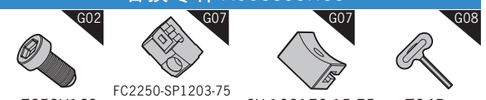

E050U160 | FC2250-SP1203-75 FC2250-SP1504-75 | SV-128170-15-75 | T04B

使用 刀片 規格 Insert specification



SPKN1203 | SPKN1504

注:祇要更換刀片座,同一個FP規格刀頭可使用SPKN1203,SPKN1504二種刀片。 適用:德克刀片
NOTICE:For two different inserts SPKN1203 and SPKN1504 with suitable inser seats. Suitable: DEREK Insert

SE45°

SE45° High-speed Face Mill
SE45度高速平面銑刀頭



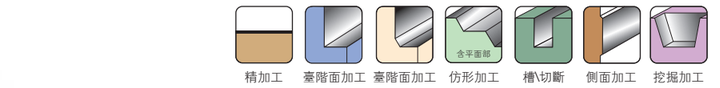

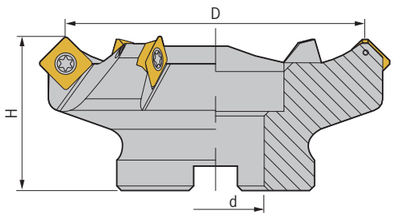

型號 Specification	刃數 Teeth	D	d	H	刀片 Insert	刀片螺釘 Insert screw	旗形扳手 Wrench	重量 Weight
SE45- 50-22-4T	4	50	22	50	SEKT1204	M050Y110-2	Q20B	0.50
63-22-5T	5	63	22	50	SEKT1204	M050Y110-2	Q20B	0.75
63-25.4-5T	5	63	25.4	50	SEKT1204	M050Y110-2	Q20B	0.75
80-27-5T	5	80	27	50	SEKT1204	M050Y110-2	Q20B	1.15
80-25.4-5T	5	80	25.4	50	SEKT1204	M050Y110-2	Q20B	1.15
100-31.75-6T	6	100	31.75	50	SEKT1204	M050Y110-2	Q20B	1.75
100-32-6T	6	100	32	50	SEKT1204	M050Y110-2	Q20B	1.75
125-38.1-6T	6	125	38.1	63	SEKT1204	M050Y110-2	Q20B	3.75
125-40-6T	6	125	40	63	SEKT1204	M050Y110-2	Q20B	3.15
160-40-6T	6	160	40	63	SEKT1204	M050Y110-2	Q20B	5.10
160-50.8-6T	6	160	50.8	63	SEKT1204	M050Y110-2	Q20B	5.10

適用 Suitable:德克刀片、施特拉姆刀片、克洛依刀片 DEREK Or STELLRAM Or KORLOY Insert

FM鋁合金平面銑刀頭
FM ALUMINUM ALLOY OF FACE MILL HEAD

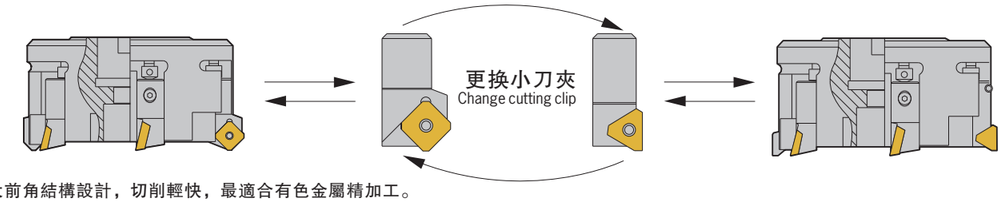

- ■大前角結構設計，切削輕快，最適合有色金屬精加工。
- ■刀片采用螺釘式壓緊結構，容屑空間大，排屑流暢。
- ■有動平衡調節結構。
- ■刀體采用輕合金材料，在滿足刀體强度時，刀具重量較輕，適合準高速銑削加工。
- ■45度主偏角和90度主偏角鋁合金面銑刀的基體相同，通過更換刀夾滿足不同主偏角加工的需要。
- ■可轉位鋁合金面銑刀也適用灰鑄鐵的精加工。

- ■The structural design is large anterior horn, easily for cutting, and well suited to the finish-cutting for nonferrous metals.
- ■The inserts use compress structure of screw-type, there will be larger chip space and more fluent chip removal.
- ■Having a dynamic balancing adjust structure.
- ■The light alloy materials are adopted, so the cutting tools feel light when the knife strength is satisfied, it is good for the quasi high speed milling process.
- ■Whether the main declination is 45° or 90°, the matrix of face milling of aluminum alloy is the same. It can meet the demands of different main declination by replacing tooling holder.
- ■Indexable aluminum alloy milling cutter is also suited to finish machining of the gray cast iron.

FM45°/FM90°

FM45° Aluminum Alloy Face Mill
FM45度鋁合金平面銑刀頭



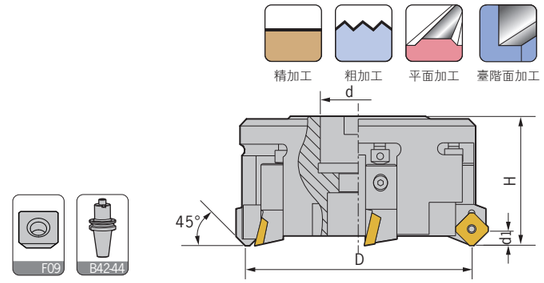

型號 Specification	刃數 Teeth	D	d	d1	H	刀夾 Cartridge	刀片 Insert	重量 Weight
FM45- 63-22-4T	4	63	22	6	50	SSSDR16CA-12AI	SEHT1204	0.70
80-27-4T	4	80	27	6	50	SSSDR16CA-12AI	SEHT1204	0.90
100-32-5T	5	100	32	6	50	SSSDR16CA-12AI	SEHT1204	1.00
125-40-6T	6	125	40	6	50	SSSDR16CA-12AI	SEHT1204	1.90
160-40-8T	8	160	40	6	50	SSSDR16CA-12AI	SEHT1204	2.70
200-60-10T	10	200	60	6	63	SSSDR16CA-12AI	SEHT1204	4.60
250-60-12T	12	250	60	6	63	SSSDR16CA-12AI	SEHT1204	7.20
315-60-14T	14	315	60	6	63	SSSDR16CA-12AI	SEHT1204	10.20

替換零件 Accessories


SSSDR16CA-12AI



E050U160



E040U100



M050Y110



T04D



Q20B

使用 刀片 規格 Insert

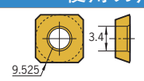

SEHT1204

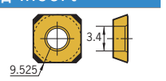

SEHT1204-PCD

FM90° Face Milling Cutter (Aluminum Alloy)
FM90度鋁合金平面銑刀頭



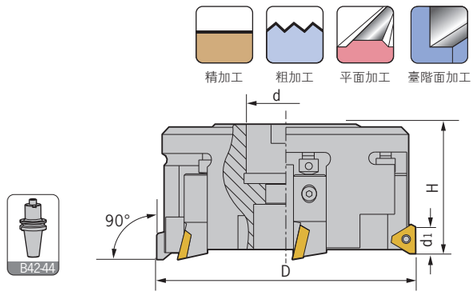

型號 Specification	刃數 Teeth	D	d	d1	H	刀夾 Cutting clip	刀片 Insert	重量 Weight
FM90- 63-22-4T	4	63	22	6	50	STGER16CA-16AI	TE **16T3	0.70
80-27-4T	4	80	27	6	50	STGER16CA-16AI	TE **16T3	0.90
100-32-5T	5	100	32	6	50	STGER16CA-16AI	TE **16T3	1.00
125-40-6T	6	125	40	6	50	STGER16CA-16AI	TE **16T3	1.90
160-40-8T	8	160	40	6	50	STGER16CA-16AI	TE **16T3	2.70
200-60-10T	10	200	60	6	63	STGER16CA-16AI	TE **16T3	4.60
250-60-12T	12	250	60	6	63	STGER16CA-16AI	TE **16T3	7.20
315-60-14T	14	315	60	6	63	STGER16CA-16AI	TE **16T3	10.20

替換零件 Accessories

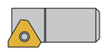
STGER16CA-12AI



E050U160



E040U100



M050Y110



T04D



Q20B

使用 刀片 規格 Insert

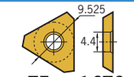

TE **16T3

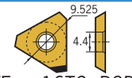

TE **16T3-PCD

AMC

AMC Shell Mill For Roughing
AMC殼式粗切削端銑刀



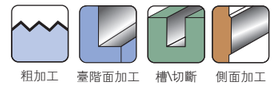



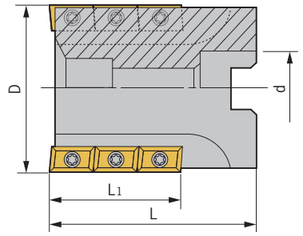

型號 Specification	刃數 Teeth	D	d	L1	L	刀片 Insert	刀片螺釘 Insert screw	旗形扳手 Wrench
AMC- 63-25.4	12	63	25.4	45	64	APMT1604	M040W100	Q15B
63-25.4	20	63	25.4	68	90	APMT1604	M040W100	Q15B
63-22	12	63	22	45	64	APMT1604	M040W100	Q15B
63-22	20	63	22	68	90	APMT1604	M040W100	Q15B

適用 Suitable:德克刀片、施特拉姆刀片 DEREK Or STELLRAM Insert

特 點 / Feature

■高性能形粗銑刀，能加工深孔。
■尺寸可由刀杆隨意變換深度，發揮最大效能。

■With high efficiency, it can process deep holes.
■Changing the depth, it can achieve high efficiency.

拾弃式切削刀具 MILLING CUTTERS
可換式銑刀頭 Screwed on Milling Cutter
可轉位銑刀杆 Indexable Milling Cutter
倒角刀 Chamfering Cutter
可轉位面銑刀 Indexable Face Mill
鋁合金面銑刀 Aluminum Face Mill
玉米銑刀 Shell Mill
三面刃側銑刀 Side Cutter

PMC/BT-BMC

PMC Shell Cutter For Roughing
PMC殼式粗切削端銑刀



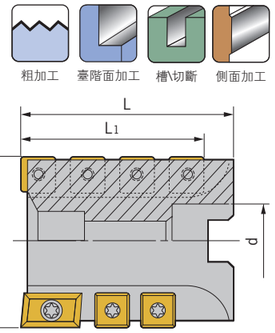

型號 Specification		刃數 Teeth	D	d	L1	L	T	刀片 Insert	T	刀片 Insert	刀片螺釘 Insert screw	旗形扳手 Wrench
PMC-	80-31.75	6	80	31.75	67	80	3	LPMT1504	18	SPMT1204	M050Y110	Q20B
	80-32	6	80	32	67	80	3	LPMT1504	18	SPMT1204	M050Y110	Q20B
	100-38.1	8	100	38.1	77	100	4	LPMT1504	28	SPMT1204	M050Y110	Q20B
	100-40	8	100	40	77	100	4	LPMT1504	28	SPMT1204	M050Y110	Q20B

適用 Suitable:德克刀片、ISO刀片 DEREK Or ISO Insert

特點 / Feature

■高性能形粗銑刀，能加工深孔。
■尺寸可由刀杆隨意變換深度，發揮最大效能。

■With high efficiency, it can process deep holes.
■Changing the depth, it can achieve high efficiency.

BT-BMC Shell Cutter For Roughing
BT-BMC粗切削端銑刀



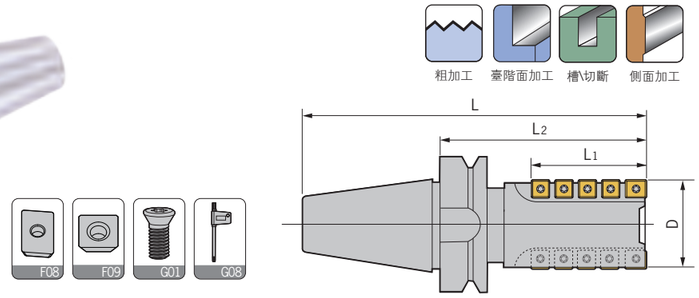

型號 Specification		D	L1	L2	L	T	刀片 Insert	T	刀片 Insert	旗形扳手 Wrench
BT50-	BMC-50-56L	50	56	126	228	2	LPMT1504	10	SPMT1204	Q20B
	BMC-50-77L	50	77	146	248	2	LPMT1504	14	SPMT1204	Q20B
	BMC-50-97L	50	97	166	268	2	LPMT1504	18	SPMT1204	Q20B
	BMC-63-67L	63	67	136	238	2	LPMT1504	12	SPMT1204	Q20B
	BMC-63-87L	63	87	156	258	2	LPMT1504	16	SPMT1204	Q20B
	BMC-63-107L	63	107	176	278	2	LPMT1504	20	SPMT1204	Q20B

適用 Suitable:德克刀片、ISO刀片 DEREK Or ISO Insert

GDC

GDC Indexable Side Cutter For Slotting
GDC捨弃式側銑刀



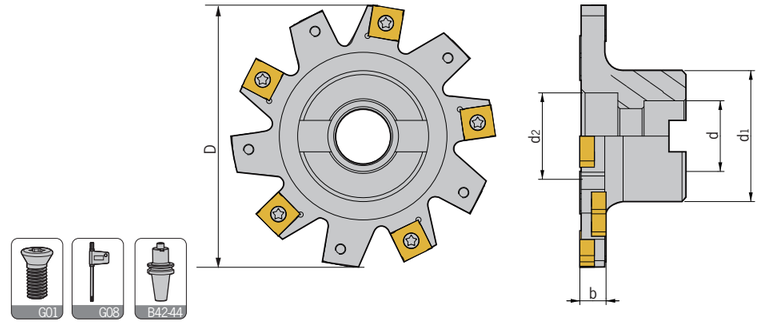

型號 Specification		刃數 Teeth	D	d	d1	d2	b	L	刀片 Insert	刀片螺釘 Insert screw	旗形扳手 Wrench	重量 Weight
GDC-	80-04B-22	10	80	22	45	28	4	40	SN**1102	M3	Q08	0.50
	80-05B-22	10	80	22	45	28	5	40	SN**1103	M3	Q08	0.50
	80-06B-22	8	80	22	45	28	6	40	SN**1203	M4	Q15	0.55
	80-07B-22	9	80	22	45	28	7	40	SN**1203	M4	Q15	0.57
	80-08B-22	9	80	22	45	28	8	40	SN**1203	M4	Q15	0.70
	80-09B-22	8	80	22	45	28	9	40	SN**1205	M4	Q15	0.60
	80-10B-22	8	80	22	45	28	10	40	SN**1205	M4	Q15	0.62
	80-12B-22	8	80	22	45	28	12	40	SN**1207	M4	Q15	0.66
	80-14B-22	9	80	22	45	28	14	40	SN**1207	M4	Q15	0.70
	100-04B-27	12	100	27	50	33	4	40	SN**1102	M3	Q08	0.67
	100-05B-27	12	100	27	50	33	5	40	SN**1103	M3	Q08	0.70
	100-06B-27	10	100	27	50	33	6	40	SN**1203	M4	Q15	0.73
	100-07B-27	9	100	27	50	33	7	40	SN**1203	M4	Q15	0.76
	100-08B-27	9	100	27	50	33	8	40	SN**1203	M4	Q15	0.80
	100-09B-27	10	100	27	50	33	9	40	SN**1205	M4	Q15	0.84
	100-10B-27	10	100	27	50	33	10	40	SN**1205	M4	Q15	0.88
	100-12B-27	10	100	27	50	33	12	40	SN**1207	M4	Q15	0.92
	100-14B-27	9	100	27	50	33	14	40	SN**1207	M4	Q15	0.98
	125-04B-32	14	125	32	70	43	4	45	SN**1102	M3	Q08	1.30
	125-05B-32	14	125	32	70	43	5	45	SN**1103	M3	Q08	1.40
	125-06B-32	12	125	32	70	43	6	45	SN**1203	M4	Q15	1.45
	125-07B-32	12	125	32	70	43	7	45	SN**1203	M4	Q15	1.50
	125-08B-32	12	125	32	70	43	8	45	SN**1203	M4	Q15	1.55
	125-09B-32	12	125	32	70	43	9	45	SN**1205	M4	Q15	1.60
	125-10B-32	12	125	32	70	43	10	45	SN**1205	M4	Q15	1.65
	125-12B-32	12	125	32	70	43	12	45	SN**1207	M4	Q15	1.75
	125-14B-32	12	125	32	70	43	14	45	SN**1207	M4	Q15	1.85
	160-06B-40	16	160	40	90	50	6	50	SN**1203	M4	Q15	2.60
	160-07B-40	15	160	40	90	50	7	50	SN**1203	M4	Q15	2.80
	160-08B-40	15	160	40	90	50	8	50	SN**1203	M4	Q15	3.00
	160-09B-40	16	160	40	90	50	9	50	SN**1205	M4	Q15	3.20
	160-10B-40	16	160	40	90	50	10	50	SN**1205	M4	Q15	3.40
	160-12B-40	16	160	40	90	50	12	50	SN**1207	M4	Q15	3.60
	160-14B-40	15	160	40	90	50	14	50	SN**1207	M4	Q15	3.80

適用 Suitable:德克刀片 DEREK Insert

SDC

SDC Indexable Side Cutter For Slotting
SDC捨弃式側銑刀





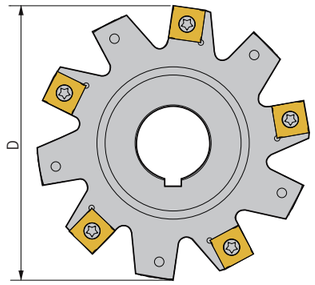

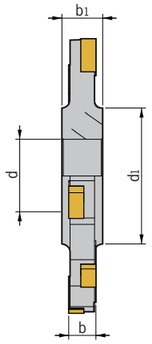

型號 Specification	刃數 Teeth	D	d	d1	b	b1	刀片型號 Insert	刀片螺釘 Insert screw	旗形扳手 Wrench	重量 Weight
SDC- 100-04B-27	12	100	27	45	4	12	SN**1102	M3	Q08	0.38
100-05B-27	12	100	27	45	5	12	SN**1103	M3	Q08	0.44
100-06B-27	10	100	27	45	6	12	SN**1203	M4	Q15	0.46
100-07B-27	9	100	27	45	7	12	SN**1203	M4	Q15	0.49
100-08B-27	9	100	27	45	8	12	SN**1203	M4	Q15	0.54
100-09B-27	10	100	27	45	9	12	SN**1205	M4	Q15	0.59
100-10B-27	10	100	27	45	10	12	SN**1205	M4	Q15	0.65
100-12B-27	10	100	27	45	12	12	SN**1207	M4	Q15	0.75
100-14B-27	9	100	27	45	14	12	SN**1207	M4	Q15	0.85
125-04B-32	14	125	32	45	4	12	SN**1102	M3	Q08	0.58
125-05B-32	14	125	32	45	5	12	SN**1103	M3	Q08	0.63
125-06B-32	12	125	32	45	6	12	SN**1203	M4	Q15	0.68
125-07B-32	12	125	32	45	7	12	SN**1203	M4	Q15	0.73
125-08B-32	12	125	32	45	8	12	SN**1203	M4	Q15	0.78
125-09B-32	12	125	32	45	9	12	SN**1205	M4	Q15	0.83
125-10B-32	12	125	32	45	10	12	SN**1205	M4	Q15	0.88
125-12B-32	12	125	32	45	12	12	SN**1207	M4	Q15	0.98
125-14B-32	12	125	32	45	14	12	SN**1207	M4	Q15	1.08
160-06B-40	16	160	40	45	6	12	SN**1203	M4	Q15	1.04
160-07B-40	15	160	40	45	7	12	SN**1203	M4	Q15	1.17
160-08B-40	15	160	40	45	8	12	SN**1203	M4	Q15	1.28
160-09B-40	16	160	40	45	9	12	SN**1205	M4	Q15	1.39
160-10B-40	16	160	40	45	10	12	SN**1205	M4	Q15	1.5
160-12B-40	16	160	40	45	12	12	SN**1207	M4	Q15	1.7
160-14B-40	15	160	40	45	14	12	SN**1207	M4	Q15	1.9

適用 Suitable:德克刀片 DEREK Insert

FDC

FDC Indexable Side Cutter For Slotting
FDC捨弃式側銑刀

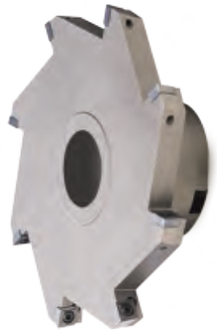



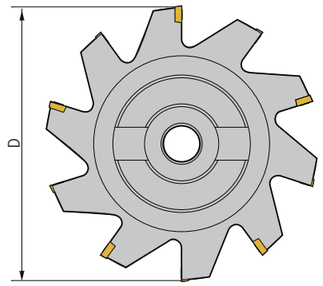

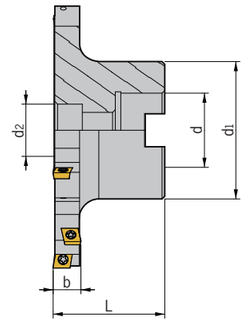

型號 Specification	刃數 Teeth	D	d	d1	d2	b	L	刀片 Insert	刀片螺釘 Insert screw	旗形扳手 Wrench	重量 Weight
FDC- 80-08B-22	8	80	22	45	18	8	40	CCMT0602	M025W060	Q08B	0.50
100-08B-27	10	100	27	50	19	8	40	CCMT0602	M025W060	Q08B	0.80
100-10B-27	10	100	27	50	19	10	40	CCMT0602	M025W060	Q08B	0.88
100-14B-27	10	100	27	50	19	14	40	CCMT09T3	M040S100-1	Q15B	0.98
125-10B-32	12	125	32	70	43	10	45	CCMT0602	M025W060	Q08B	1.65
125-12B-32	12	125	32	70	43	12	45	CCMT09T3	M040S100-1	Q15B	1.75
125-16B-32	10	125	32	70	43	16	45	CCMT1204	M050Y110-1	Q20B	2.00
160-12B-40	16	160	40	80	50	12	50	CCMT09T3	M040S100-1	Q15B	3.60
160-16B-40	12	160	40	80	50	16	50	CCMT1204	M050Y110-1	Q20B	3.80
160-18B-40	12	160	40	80	50	18	50	CCMT1204	M050Y110-1	Q20B	4.00
200-12B-40	16	200	40	90	50	12	50	CCMT09T3	M040S100-1	Q15B	4.40
200-16B-40	14	200	40	90	50	16	50	CCMT1204	M050Y110-1	Q20B	4.70
200-18B-40	14	200	40	90	50	18	50	CCMT1204	M050Y110-1	Q20B	5.10
200-20B-40	14	200	40	90	50	20	50	CCMT1204	M050Y110-1	Q20B	5.50

適用 Suitable:德克刀片 DEREK Insert

捨弃式切削刀具 MILLING CUTTERS
可換式銑刀頭 Screwed on Milling Cutter
可轉位銑刀杆 Indexable Milling Cutter
倒角刀 Chamfering Cutter
可轉位面銑刀 Indexable Face Mill
鋁合金面銑刀 Aluminum Face Mill
玉米銑刀 Shell Mill
三面刃側銑刀 Side Cutter

ADC

ADC Indexable Side Cutter For Slotting
ADC捨弃式側銑刀





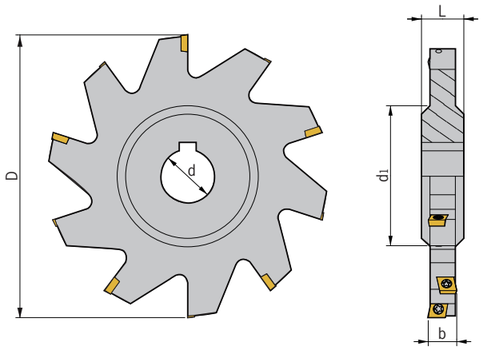

型號 Specification	刃數 Teeth	D	d	d1	b	L	刀片 Insert	刀片螺釘 Insert screw	旗形扳手 Wrench	重量 Weight
ADC- 80-08B-22	8	80	22	45	8	40	CCMT0602	M025W060	Q08B	0.32
100-08B-27	10	100	27	50	8	40	CCMT0602	M025W060	Q08B	0.54
100-10B-27	10	100	27	50	10	40	CCMT0602	M025W060	Q08B	0.65
100-14B-27	10	100	27	50	14	40	CCMT09T3	M040S100-1	Q15B	0.85
125-10B-32	12	125	32	70	10	45	CCMT0602	M025W060	Q08B	0.88
125-12B-32	12	125	32	70	12	45	CCMT09T3	M040S100-1	Q15B	0.98
125-16B-32	10	125	32	70	16	45	CCMT1204	M050Y110-1	Q20B	1.18
160-12B-40	16	160	40	80	12	50	CCMT09T3	M040S100-1	Q15B	1.70
160-16B-40	12	160	40	80	16	50	CCMT1204	M050Y110-1	Q20B	2.10
160-18B-40	12	160	40	80	18	50	CCMT1204	M050Y110-1	Q20B	2.50
200-12B-40	16	200	40	90	12	50	CCMT09T3	M040S100-1	Q15B	2.90
200-16B-40	14	200	40	90	16	50	CCMT1204	M050Y110-1	Q20B	3.20
200-18B-40	14	200	40	90	18	50	CCMT1204	M050Y110-1	Q20B	3.60
200-20B-40	14	200	40	90	20	50	CCMT1204	M050Y110-1	Q20B	4.10

適用 Suitable:德克刀片 DEREK Insert



Type M

MCLNR/L

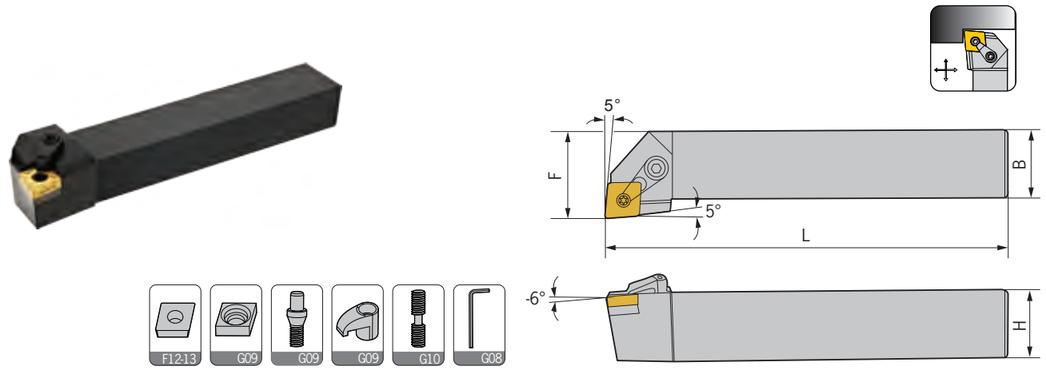

型號 Specification		H	B	L	F	刀片 Insert	刀墊 Shim	中心螺絲 Center screw	壓板 Clamp	壓板螺絲 Clamp screw	扳手 Wrench
MCLNR/L	**1616H12**	16	16	100	20	CN..1204..	MC1204	MX0617	MY0619	ML0625	L025,L03
	2020K12	20	20	125	25	CN..1204..	MC1204	MX0617	MY0619	ML0625	L025,L03
	2525M12	25	25	150	32	CN..1204..	MC1204	MX0617	MY0619	ML0625	L025,L03
	3232P12	32	32	170	40	CN..1204..	MC1204	MX0617	MY0619	ML0625	L025,L03

適用 Suitable:德克刀片 DEREK Insert

MCBNR/L

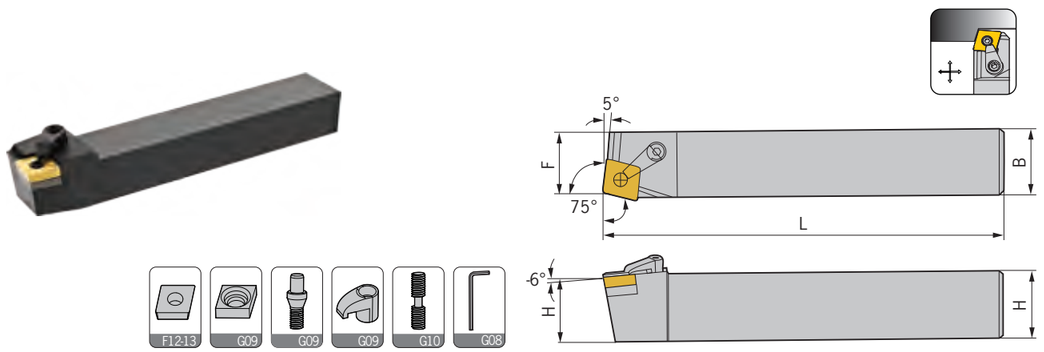

型號 Specification		H	B	L	F	刀片 Insert	刀墊 Shim	中心螺絲 Center screw	壓板 Clamp	壓板螺絲 Clamp screw	扳手 Wrench
MCBNR/L	**1616H12**	16	16	100	13	CN..1204..	MC1204	MX0617	MY0619	ML0625	L025,L03
	2020K12	20	20	125	17	CN..1204..	MC1204	MX0617	MY0619	ML0625	L025,L03
	2525M12	25	25	150	22	CN..1204..	MC1204	MX0617	MY0619	ML0625	L025,L03
	3232P12	32	32	170	27	CN..1204..	MC1204	MX0617	MY0619	ML0625	L025,L03
	3232P16	32	32	170	27	CN..1606..	MC1604	MX0822	MY0823	ML0828	L03,L04
	3232P19	32	32	170	27	CN..1906..	MC1904	MX1022	MY0823	ML0828	L04
	4040R19	40	40	200	35	CN..1906..	MC1904	MX1022	MY0823	ML0828	L04

適用 Suitable:德克刀片 DEREK Insert

Type M

MCKNR/L

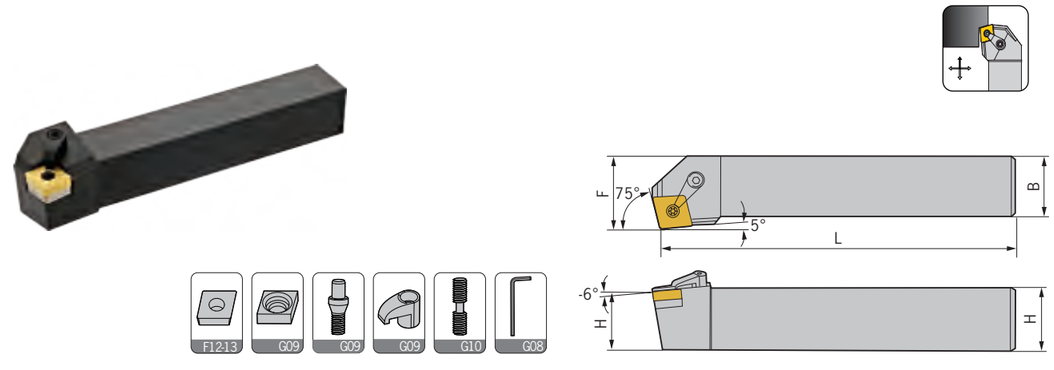

型號 Specification		H	B	L	F	刀片 Insert	刀墊 Shim	中心螺絲 Center screw	壓板 Clamp	壓板螺絲 Clamp screw	扳手 Wrench
MCKNR/L	**2020K12**	20	20	125	25	CN..1204..	MC1204	MX0617	MY0619	ML0625	L025,L03
	2525M12	25	25	150	32	CN..1204..	MC1204	MX0617	MY0619	ML0625	L025,L03
	3232P12	32	32	170	40	CN..1204..	MC1204	MX0617	MY0619	ML0625	L025,L03
	3232P16	32	32	170	40	CN..1606..	MC1604	MX0822	MY0823	ML0828	L03,L04
	3232P19	32	32	170	40	CN..1906..	MC1904	MX1022	MY0823	ML0828	L04

適用 Suitable:德克刀片 DEREK Insert

MCFNR/L

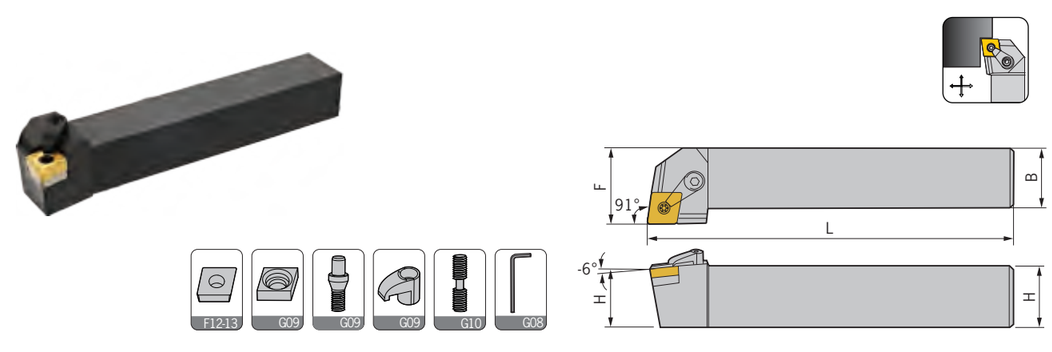

型號 Specification		H	B	L	F	刀片 Insert	刀墊 Shim	中心螺絲 Center screw	壓板 Clamp	壓板螺絲 Clamp screw	扳手 Wrench
MCFNR/L	**2525M12**	25	25	150	32	CN..1204..	MC1204	MX0617	MY0619	ML0625	L025,L03
	3232P12	32	32	170	40	CN..1204..	MC1204	MX0617	MY0619	ML0625	L025,L03
	3232P19	32	32	170	40	CN..1906..	MC1904	MX1022	MY0823	ML0828	L04
	4040R19	40	40	200	50	CN..1906..	MC1904	MX1022	MY0823	ML0828	L04

適用 Suitable:德克刀片 DEREK Insert

Type M

MCGNR/L





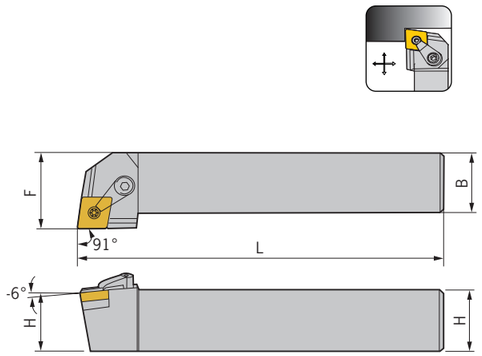

型號 Specification		H	B	L	F	刀片 Insert	刀墊 Shim	中心螺絲 Center screw	壓板 Clamp	壓板螺絲 Clamp screw	扳手 Wrench
MCGNR/L	**1616H12**	16	16	100	20	CN..1204..	MC1204	MX0617	MY0619	ML0625	L025,L03
	2020K12	20	20	125	25	CN..1204..	MC1204	MX0617	MY0619	ML0625	L025,L03
	2525M12	25	25	150	32	CN..1204..	MC1204	MX0617	MY0619	ML0625	L025,L03
	3232P12	32	32	170	40	CN..1204..	MC1204	MX0617	MY0619	ML0625	L025,L03
	3232P16	32	32	170	40	CN..1606..	MC1604	MX0822	MY0823	ML0828	L03,L04
	3232P19	32	32	170	40	CN..1906..	MC1904	MX1022	MY0823	ML0828	L04
	4040R19	40	40	200	50	CN..1906..	MC1904	MX1022	MY0823	ML0828	L04

適用 Suitable:德克刀片 DEREK Insert

MCSNR/L





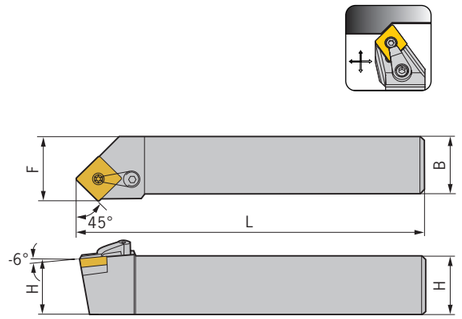

型號 Specification		H	B	L	F	刀片 Insert	刀墊 Shim	中心螺絲 Center screw	壓板 Clamp	壓板螺絲 Clamp screw	扳手 Wrench
MCSNR/L	**2020K12**	20	20	125	25	CN..1204..	MC1204	MX0617	MY0619	ML0625	L025,L03
	2525M12	25	25	150	32	CN..1204..	MC1204	MX0617	MY0619	ML0625	L025,L03
	3232P12	32	32	170	40	CN..1204..	MC1204	MX0617	MY0619	ML0625	L025,L03
	3232P19	32	32	170	40	CN..1906..	MC1904	MX1022	MY0823	ML0828	L04

適用 Suitable:德克刀片 DEREK Insert

Type M

MCMNN



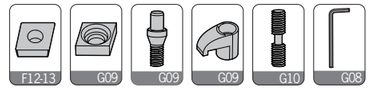

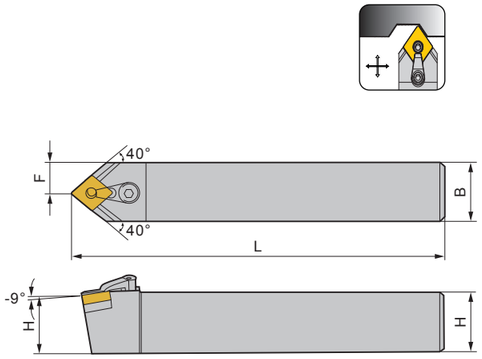

型號 Specification		H	B	L	F	刀片 Insert	刀墊 Shim	中心螺絲 Center screw	壓板 Clamp	壓板螺絲 Clamp screw	扳手 Wrench
MCMNN	**1616H12**	16	16	100	8	CN..1204..	MC1204	MX0617	MY0619	ML0625	L025,L03
	2020K12	20	20	125	10	CN..1204..	MC1204	MX0617	MY0619	ML0625	L025,L03
	2525M12	25	25	150	12.5	CN..1204..	MC1204	MX0617	MY0619	ML0625	L025,L03
	3232P12	32	32	170	16	CN..1204..	MC1204	MX0617	MY0619	ML0625	L025,L03
	2525M16	25	25	150	12.5	CN..1606..	MC1604	MX0822	MY0823	ML0828	L03,L04
	3232P19	32	32	170	16	CN..1906..	MC1904	MX1022	MY0823	ML0828	L04

適用 Suitable:德克刀片 DEREK Insert

MCMNN-40



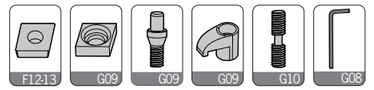

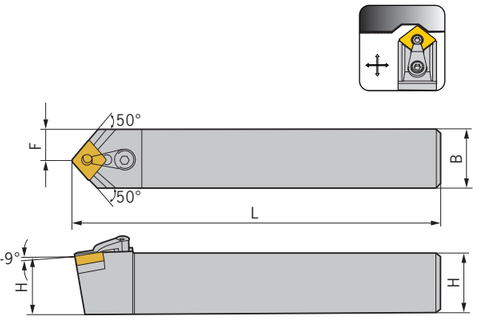

型號 Specification		H	B	L	F	刀片 Insert	刀墊 Shim	中心螺絲 Center screw	壓板 Clamp	壓板螺絲 Clamp screw	扳手 Wrench
MCMNN	**1616H12-40**	16	16	100	8	CN..1204..	MC1204	MX0617	MY0619	ML0625	L025,L03
	2020K12-40	20	20	125	10	CN..1204..	MC1204	MX0617	MY0619	ML0625	L025,L03
	2525M12-40	25	25	150	12.5	CN..1204..	MC1204	MX0617	MY0619	ML0625	L025,L03
	3232P12-40	32	32	170	16	CN..1204..	MC1204	MX0617	MY0619	ML0625	L025,L03
	2525M16-40	25	25	150	12.5	CN..1606..	MC1604	MX0822	MY0823	ML0828	L03,L04
	3232P19-40	32	32	170	16	CN..1906..	MC1904	MX1022	MY0823	ML0828	L04

適用 Suitable:德克刀片 DEREK Insert

Type M

MDJNR/L



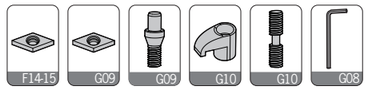

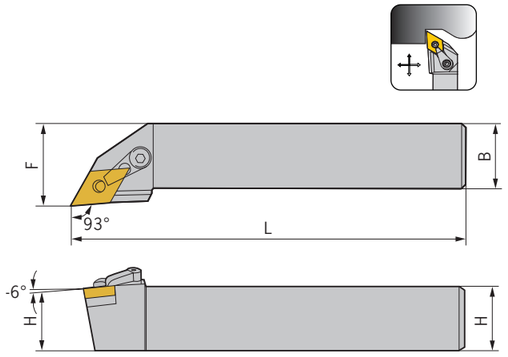

型號 Specification		H	B	L	F	刀片 Insert	刀墊 Shim	中心螺絲 Center screw	壓板 Clamp	壓板螺絲 Clamp screw	扳手 Wrench
MDJNR/L	1616H11	16	16	100	20	DN..1104..	MD1103	MX0513	MY0619	ML0625	L02,L03
	2020K11	20	20	125	25	DN..1104..	MD1103	MX0513	MY0619	ML0625	L02,L03
	2525M11	25	25	150	32	DN..1104..	MD1103	MX0513	MY0619	ML0625	L02,L03
	2020K15	20	20	125	25	DN..1504..	MD1506	MX0619	MY0621	ML0625	L025,L03
	2525M15	25	25	150	32			MX0619	MY0621	ML0625	L025,L03
	3232P15	32	32	170	40	DN..1506..	MD1504	MX0619	MY0621	ML0625	L025,L03

適用 Suitable:德克刀片 DEREK Insert

MDPNN



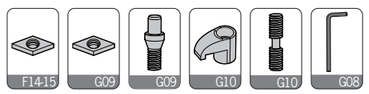

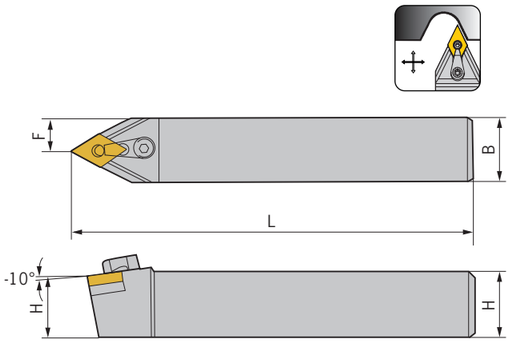

型號 Specification		H	B	L	F	刀片 Insert	刀墊 Shim	中心螺絲 Center screw	壓板 Clamp	壓板螺絲 Clamp screw	扳手 Wrench
MDPNN	1616H11	16	16	100	8	DN..1104..	MD1103	MX0513	MY0619	ML0625	L02,L03
	2020K11	20	20	125	10	DN..1104..	MD1103	MX0513	MY0619	ML0625	L02,L03
	2525M11	25	25	150	12.5	DN..1104..	MD1103	MX0513	MY0619	ML0625	L02,L03
	2020K15	20	20	125	10	DN..1504..	MD1506	MX0619	MY0621	ML0625	L025,L03
	2525M15	25	25	150	12.5			MX0619	MY0621	ML0625	L025,L03
	3232P15	32	32	170	16	DN..1506..	MD1504	MX0619	MY0621	ML0625	L025,L03

適用 Suitable:德克刀片 DEREK Insert

Type M

MDQNR/L



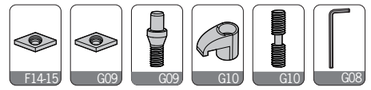

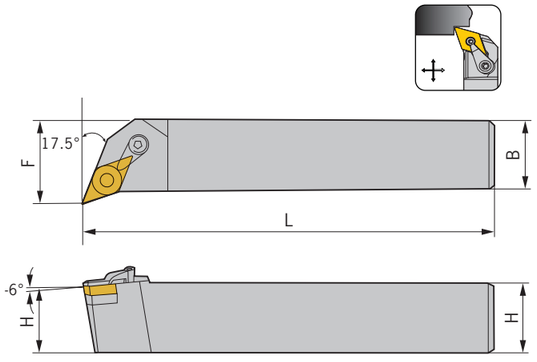

型號 Specification		H	B	L	F	刀片 Insert	刀墊 Shim	中心螺絲 Center screw	壓板 Clamp	壓板螺絲 Clamp screw	扳手 Wrench
MDQNR/L	1616H11	16	16	100	20	DN..1104..	MD1103	MX0513	MY0619	ML0625	L02,L03
	2020K11	20	20	125	25	DN..1104..	MD1103	MX0513	MY0619	ML0625	L02,L03
	2525M11	25	25	150	32	DN..1104..	MD1103	MX0513	MY0619	ML0625	L02,L03
	2020K15	20	20	125	25	DN..1504..	MD1506	MX0619	MY0621	ML0625	L025,L03
	2525M15	25	25	150	32			MX0619	MY0621	ML0625	L025,L03
	3232P15	32	32	170	40	DN..1506..	MD1504	MX0619	MY0621	ML0625	L025,L03

適用 Suitable:德克刀片 DEREK Insert

MSBNR/L



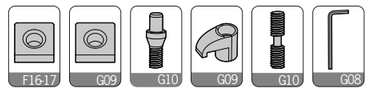

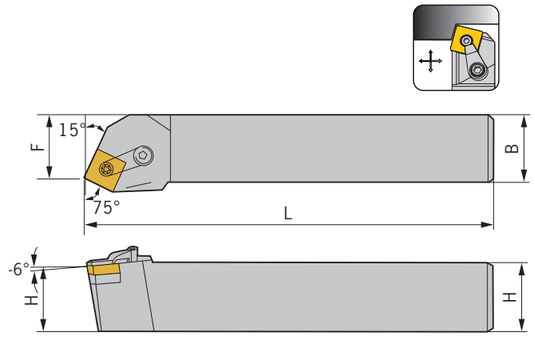

型號 Specification		H	B	L	F	刀片 Insert	刀墊 Shim	中心螺絲 Center screw	壓板 Clamp	壓板螺絲 Clamp screw	扳手 Wrench
MSBNR/L	2020K12	22	22	125	17	SN..1204..	MS1204	MX0617	MY0619	ML0625	L025,L03
	2525M12	25	25	150	22	SN..1204..	MS1204	MX0617	MY0619	ML0625	L025,L03
	3232P12	32	32	170	27	SN..1204..	MS1204	MX0617	MY0619	ML0625	L025,L03
	2525M15	25	25	150	22	SN..1506..	MS1504	MX0822	MY0823	ML0828	L03,L04
	3232P15	32	32	170	27	SN..1506..	MS1504	MX0822	MY0823	ML0828	L03,L04
	3232P19	32	32	170	27	SN..1906..	MS1904	MX1022	MY0823	ML0828	L04
	4040R19	40	40	200	35	SN..1906..	MS1904	MX1022	MY0823	ML0828	L04
	4040S19	40	40	250	35	SN..1906..	MS1904	MX1022	MY0823	ML0828	L04

適用 Suitable:德克刀片 DEREK Insert

Type M

MSDNN



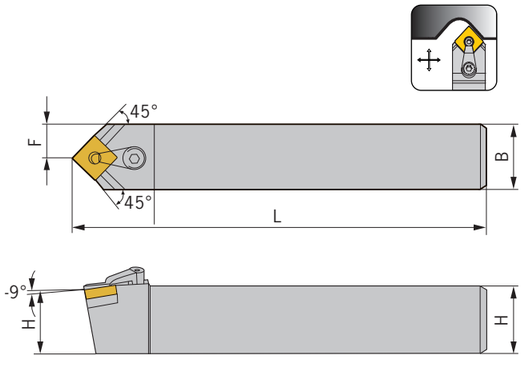



型號 Specification		H	B	L	F	刀片 Insert	刀墊 Shim	中心螺絲 Center screw	壓板 Clamp	壓板螺絲 Clamp screw	扳手 Wrench
MSDNN	**1616H12**	16	16	100	8	SN..1204..	MS1204	MX0617	MY0619	ML0625	L025,L03
	2020K12	20	20	125	10	SN..1204..	MS1204	MX0617	MY0619	ML0625	L025,L03
	2525M12	25	25	150	12.5	SN..1204..	MS1204	MX0617	MY0619	ML0625	L025,L03
	3232P12	32	32	170	16	SN..1204..	MS1204	MX0617	MY0619	ML0625	L025,L03
	2525M15	25	25	150	12.5	SN..1506..	MS1504	MX0822	MY0823	ML0828	L03,L04
	3232P15	32	32	170	16	SN..1506..	MS1504	MX0822	MY0823	ML0828	L03,L04
	3232P19	32	32	170	16	SN..1906..	MS1904	MX1022	MY0823	ML0828	L04
	4040S19	40	40	250	20	SN..1906..	MS1904	MX1022	MY0823	ML0828	L04

適用 Suitable:德克刀片 DEREK Insert

MSKNR/L



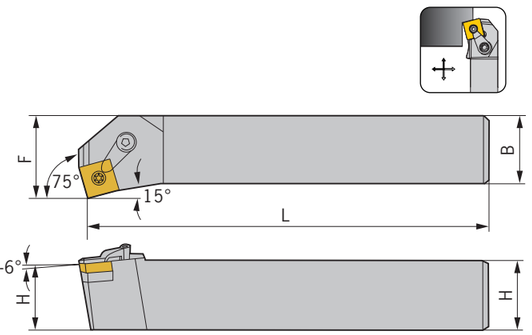



型號 Specification		H	B	L	F	刀片 Insert	刀墊 Shim	中心螺絲 Center screw	壓板 Clamp	壓板螺絲 Clamp screw	扳手 Wrench
MSKNR/L	**2020K12**	20	20	125	25	SN..1204..	MS1204	MX0617	MY0619	ML0625	L025,L03
	2525M12	25	25	150	32	SN..1204..	MS1204	MX0617	MY0619	ML0625	L025,L03
	3232P12	32	32	170	40	SN..1204..	MS1204	MX0617	MY0619	ML0625	L025,L03
	2525M15	25	25	150	32	SN..1506..	MS1504	MX0822	MY0823	ML0828	L03,L04
	3232P15	32	32	170	40	SN..1506..	MS1504	MX0822	MY0823	ML0828	L03,L04
	3232P19	32	32	170	40	SN..1906..	MS1904	MX1022	MY0823	ML0828	L04
	4040S19	40	40	250	50	SN..1906..	MS1904	MX1022	MY0823	ML0828	L04

適用 Suitable:德克刀片 DEREK Insert

Type M

MSSNR/L



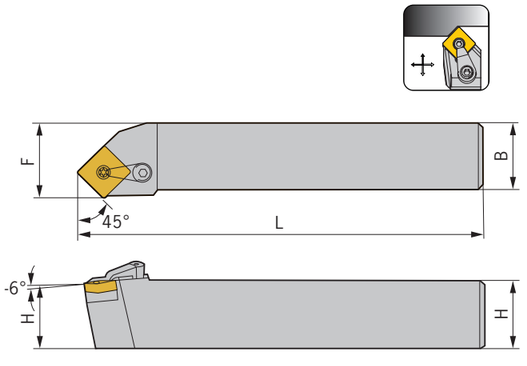



型號 Specification		H	B	L	F	刀片 Insert	刀墊 Shim	中心螺絲 Center screw	壓板 Clamp	壓板螺絲 Clamp screw	扳手 Wrench
MSSNR/L	**1616H12**	16	16	100	20	SN..1204..	MS1204	MX0617	MY0619	ML0625	L025,L03
	2020K12	20	20	125	25	SN..1204..	MS1204	MX0617	MY0619	ML0625	L025,L03
	2525M12	25	25	150	32	SN..1204..	MS1204	MX0617	MY0619	ML0625	L025,L03
	3232P12	32	32	170	40	SN..1204..	MS1204	MX0617	MY0619	ML0625	L025,L03
	2525M15	25	25	150	32	SN..1506..	MS1504	MX0822	MY0823	ML0828	L03,L04
	3232P15	32	32	170	40	SN..1506..	MS1504	MX0822	MY0823	ML0828	L03,L04
	3232P19	32	32	170	40	SN..1906..	MS1904	MX1022	MY0823	ML0828	L04
	4040S19	40	40	250	50	SN..1906..	MS1904	MX1022	MY0823	ML0828	L04

適用 Suitable:德克刀片 DEREK Insert

MTBNR/L



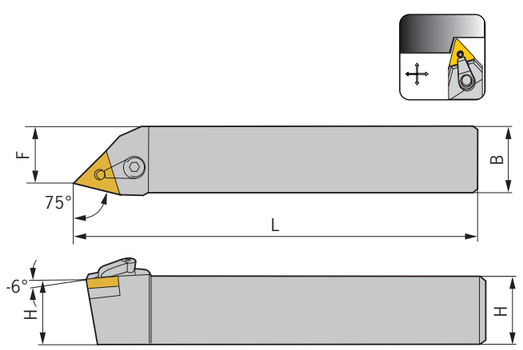

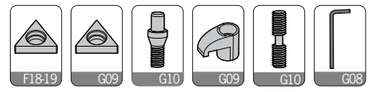

型號 Specification		H	B	L	F	刀片 Insert	刀墊 Shim	中心螺絲 Center screw	壓板 Clamp	壓板螺絲 Clamp screw	扳手 Wrench
MTBNR/L	**2020K16**	20	20	125	16	TN..1604..	MT1603	MX0513	MY0619	ML0625	L02,L03
	2525M16	25	25	150	21	TN..1604..	MT1603	MX0513	MY0619	ML0625	L02,L03

適用 Suitable:德克刀片 DEREK Insert

Type M

MTENN





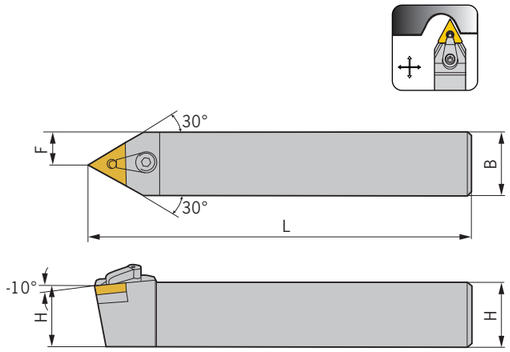

型號 Specification		H	B	L	F	刀片 Insert	刀墊 Shim	中心螺絲 Center screw	壓板 Clamp	壓板螺絲 Clamp screw	扳手 Wrench
MTENN	**1616H16**	16	16	100	8	TN..1604..	MT1603	MX0513	MY0619	ML0625	L02,L03
	2020K16	20	20	125	10	TN..1604..	MT1603	MX0513	MY0619	ML0625	L02,L03
	2525M16	25	25	150	12.5	TN..1604..	MT1603	MX0513	MY0619	ML0625	L02,L03
	3232P16	32	32	170	16	TN..1604..	MT1603	MX0513	MY0619	ML0625	L02,L03
	4040S16	40	40	250	20	TN..1604..	MT1603	MX0513	MY0619	ML0625	L02,L03
	2525M22	25	25	150	12.5	TN..2204..	MT2204	MX0617	MY0819	ML0828	L025,L04
	3232P22	32	32	170	16	TN..2204..	MT2204	MX0617	MY0819	ML0828	L025,L04

適用 Suitable:德克刀片 DEREK Insert

MTJNR/L



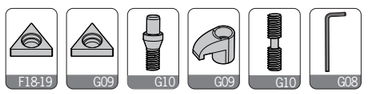

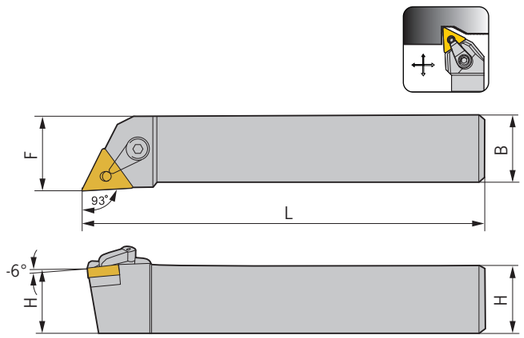

型號 Specification		H	B	L	F	刀片 Insert	刀墊 Shim	中心螺絲 Center screw	壓板 Clamp	壓板螺絲 Clamp screw	扳手 Wrench
MTJNR/L	**1616H16**	16	16	100	20	TN..1604..	MT1603	MX0513	MY0619	ML0625	L02,L03
	2020K16	20	20	125	25	TN..1604..	MT1603	MX0513	MY0619	ML0625	L02,L03
	2525M16	25	25	150	32	TN..1604..	MT1603	MX0513	MY0619	ML0625	L02,L03
	3232P16	32	32	170	40	TN..1604..	MT1603	MX0513	MY0619	ML0625	L02,L03
	2525M22	25	25	150	32	TN..2204..	MT2204	MX0617	MY0819	ML0828	L025,L04
	3232P22	32	32	170	40	TN..2204..	MT2204	MX0617	MY0819	ML0828	L025,L04
	4040R22	40	40	200	50	TN..2204..	MT2204	MX0617	MY0819	ML0828	L025,L04

適用 Suitable:德克刀片 DEREK Insert

Type M

MTFNR/L



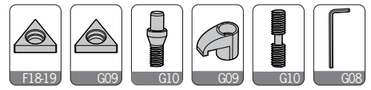

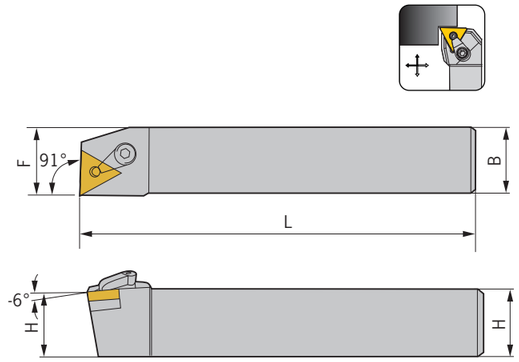

型號 Specification		H	B	L	F	刀片 Insert	刀墊 Shim	中心螺絲 Center screw	壓板 Clamp	壓板螺絲 Clamp screw	扳手 Wrench
MTFNR/L	**1616H16**	16	16	100	20	TN..1604..	MT1603	MX0513	MY0619	ML0625	L02,L03
	2020K16	20	20	125	25	TN..1604..	MT1603	MX0513	MY0619	ML0625	L02,L03
	2525M16	25	25	150	32	TN..1604..	MT1603	MX0513	MY0619	ML0625	L02,L03
	3232P16	32	32	170	40	TN..1604..	MT1603	MX0513	MY0619	ML0625	L02,L03
	2525M22	25	25	150	32	TN..2204..	MT2204	MX0617	MY0819	ML0828	L025,L04
	3232P22	32	32	170	40	TN..2204..	MT2204	MX0617	MY0819	ML0828	L025,L04

適用 Suitable:德克刀片 DEREK Insert

MTUNR/L



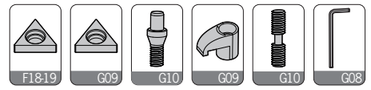

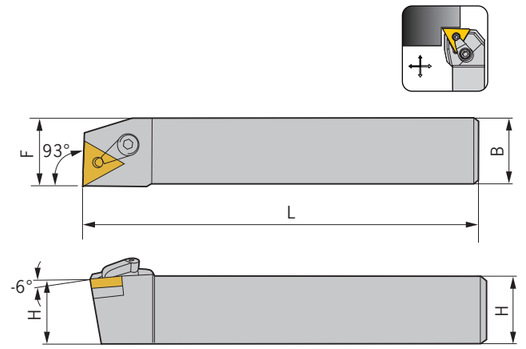

型號 Specification		H	B	L	F	刀片 Insert	刀墊 Shim	中心螺絲 Center screw	壓板 Clamp	壓板螺絲 Clamp screw	扳手 Wrench
MTUNR/L	**1616H16**	16	16	100	20	TN..1604..	MT1603	MX0513	MY0619	ML0625	L02,L03
	2020K20	20	20	125	25	TN..1604..	MT1603	MX0513	MY0619	ML0625	L02,L03
	2525M16	25	25	150	32	TN..1604..	MT1603	MX0513	MY0619	ML0625	L02,L03
	3232P16	32	32	170	40	TN..1604..	MT1603	MX0513	MY0619	ML0625	L02,L03
	2525M22	25	25	150	32	TN..2204..	MT2204	MX0617	MY0819	ML0828	L025,L04
	3232P22	32	32	170	32	TN..2204..	MT2204	MX0617	MY0819	ML0828	L025,L04
	4040S22	40	40	250	50	TN..2204..	MT2204	MX0617	MY0819	ML0828	L025,L04

適用 Suitable:德克刀片 DEREK Insert

Type M

MTGNR/L



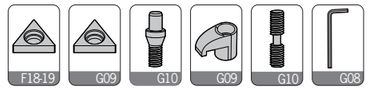

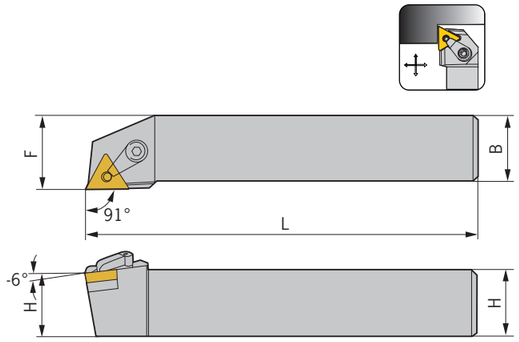

型號 Specification		H	B	L	F	刀片 Insert	刀墊 Shim	中心螺絲 Center screw	壓板 Clamp	壓板螺絲 Clamp screw	扳手 Wrench
MTGNR/L	**1616H16**	16	16	100	20	TN..1604..	MT1603	MX0513	MY0619	ML0625	L02,L03
	2020K16	20	20	125	25	TN..1604..	MT1603	MX0513	MY0619	ML0625	L02,L03
	2525M16	25	25	150	32	TN..1604..	MT1603	MX0513	MY0619	ML0625	L02,L03
	3232P16	32	32	170	37	TN..1604..	MT1603	MX0513	MY0619	ML0625	L02,L03
	3232P22	32	32	170	40	TN..2204..	MT2204	MX0617	MY0819	ML0828	L025,L04

適用 Suitable:德克刀片 DEREK Insert

MTQNR/L





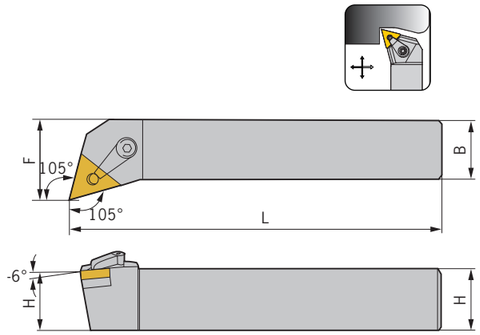

型號 Specification		H	B	L	F	刀片 Insert	刀墊 Shim	中心螺絲 Center screw	壓板 Clamp	壓板螺絲 Clamp screw	扳手 Wrench
MTQNR/L	**1616H16**	16	16	100	20	TN..1604..	MT1603	MX0513	MY0619	ML0625	L02,L03
	2020K16	20	20	125	25	TN..1604..	MT1603	MX0513	MY0619	ML0625	L02,L03
	2525M16	25	25	150	32	TN..1604..	MT1603	MX0513	MY0619	ML0625	L02,L03
	3232P16	32	32	170	40	TN..1604..	MT1603	MX0513	MY0619	ML0625	L02,L03
	2525M22	25	25	150	32	TN..2204..	MT2204	MX0617	MY0819	ML0828	L025,L04
	3232P22	32	32	170	40	TN..2204..	MT2204	MX0617	MY0819	ML0828	L025,L04

適用 Suitable:德克刀片 DEREK Insert

Type M

MVJNR/L





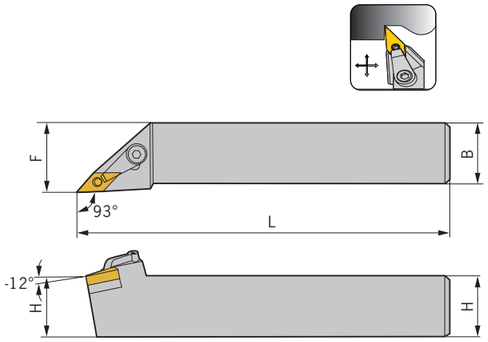

型號 Specification		H	B	L	F	刀片 Insert	刀墊 Shim	中心螺絲 Center screw	壓板 Clamp	壓板螺絲 Clamp screw	扳手 Wrench
MVJNR/L	**1616H16**	16	16	100	20	VN..1604..	MV1603	MX0513	MY0826	ML0828	L02,L04
	2020K16	20	20	125	25	VN..1604..	MV1603	MX0513	MY0826	ML0828	L02,L04
	2525M16	25	25	150	32	VN..1604..	MV1603	MX0513	MY0826	ML0828	L02,L04
	3232P16	32	32	170	40	VN..1604..	MV1603	MX0513	MY0826	ML0828	L02,L04

適用 Suitable:德克刀片 DEREK Insert

MVQNR/L





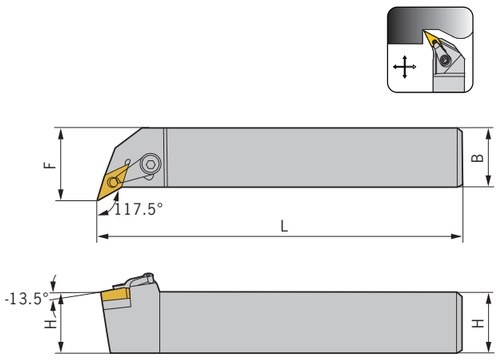

型號 Specification		H	B	L	F	刀片 Insert	刀墊 Shim	中心螺絲 Center screw	壓板 Clamp	壓板螺絲 Clamp screw	扳手 Wrench
MVQNR/L	**2020K16**	20	20	125	25	VN..1604..	MV1603	MX0513	MY0621	ML0625	L02,L03
	2525M16	25	25	150	32	VN..1604..	MV1603	MX0513	MY0621	ML0625	L02,L03
	3232P16	32	32	170	40	VN..1604..	MV1603	MX0513	MY0826	ML0828	L02,L04

適用 Suitable:德克刀片 DEREK Insert

Type M

MVUNR/L

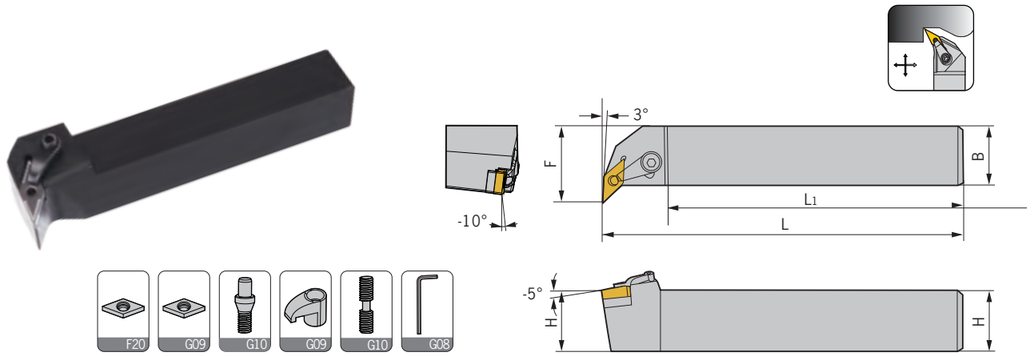

型號 Specification		H	B	L	L1	F	刀片 Insert	刀墊 Shim	中心螺絲 Center screw	壓板 Clamp	壓板螺絲 Clamp screw	扳手 Wrench
MVUNR/L-	**2020K16**	20	20	125	100	31	VN..1604..	MV1603	MX0513	MY0621	ML0625	L02,L03
	2525M16	25	25	150	120	36	VN..1604..	MV1603	MX0513	MY0621	ML0625	L02,L03
	2232P16	32	32	170	135	43	VN..1604..	MV1603	MX0513	MY0621	ML0625	L02,L03

適用 Suitable:德克刀片 DEREK Insert

MVVNN

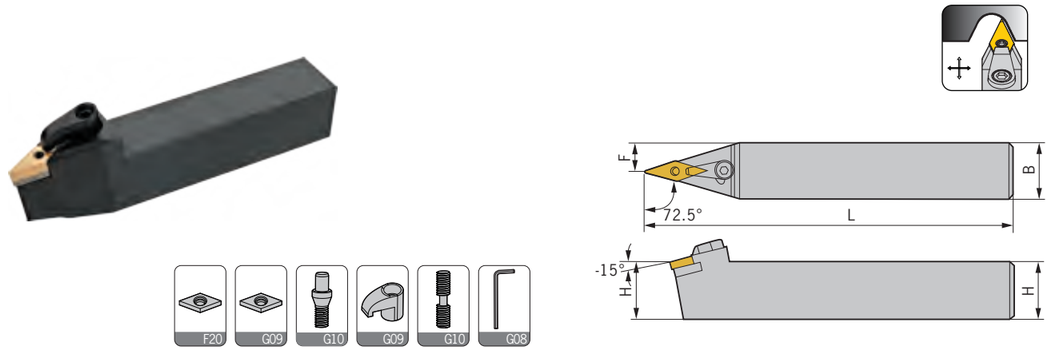

型號 Specification		H	B	L	F	刀片 Insert	刀墊 Shim	中心螺絲 Center screw	壓板 Clamp	壓板螺絲 Clamp screw	扳手 Wrench
MVVNN	**1616H16**	16	16	100	8	VN..1604..	MV1603	MX0513	MY0826	ML0828	L02,L04
	2020K16	20	20	125	10	VN..1604..	MV1603	MX0513	MY0826	ML0828	L02,L04
	2525M16	25	25	150	12.5	VN..1604..	MV1603	MX0513	MY0826	ML0828	L02,L04
	3232P16	32	32	170	16	VN..1604..	MV1603	MX0513	MY0826	ML0828	L02,L04

適用 Suitable:德克刀片 DEREK Insert

Type M/W

MWLNR/L

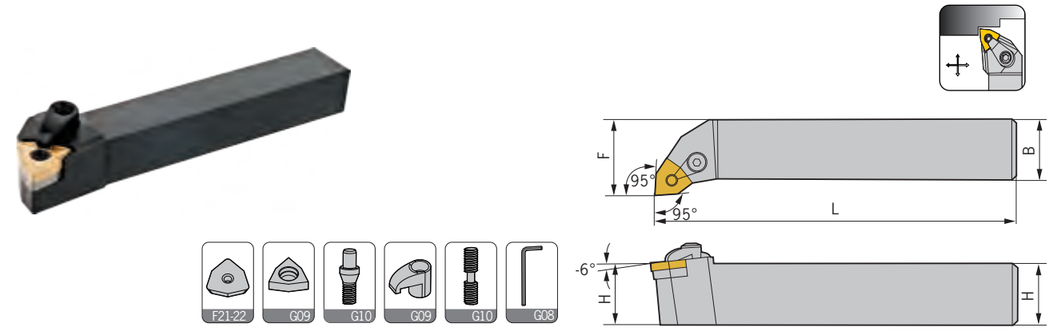

型號 Specification		H	B	L	F	刀片 Insert	刀墊 Shim	中心螺絲 Center screw	壓板 Clamp	壓板螺絲 Clamp screw	扳手 Wrench
MWLNR/L	**1616H06**	16	16	100	20	WN..0604..	MW0603	MX0513	MY0619	ML0625	L02,L03
	2020K06	20	20	125	25	WN..0604..	MW0603	MX0513	MY0619	ML0625	L02,L03
	2525M06	25	25	150	32	WN..0604..	MW0603	MX0513	MY0619	ML0625	L02,L03
	1616H08	16	16	100	20	WN..0804..	MW0804	MX0617	MY0619	ML0625	L025,L03
	2020K08	20	20	125	25	WN..0804..	MW0804	MX0617	MY0619	ML0625	L025,L03
	2525M08	25	25	150	32	WN..0804..	MW0804	MX0617	MY0619	ML0625	L025,L03
	3232P08	32	32	170	40	WN..0804..	MW0804	MX0617	MY0619	ML0625	L025,L03
	4040R08	40	40	200	50	WN..0804..	MW0804	MX0617	MY0619	ML0625	L025,L03

適用 Suitable:德克刀片 DEREK Insert

WCKNR/L

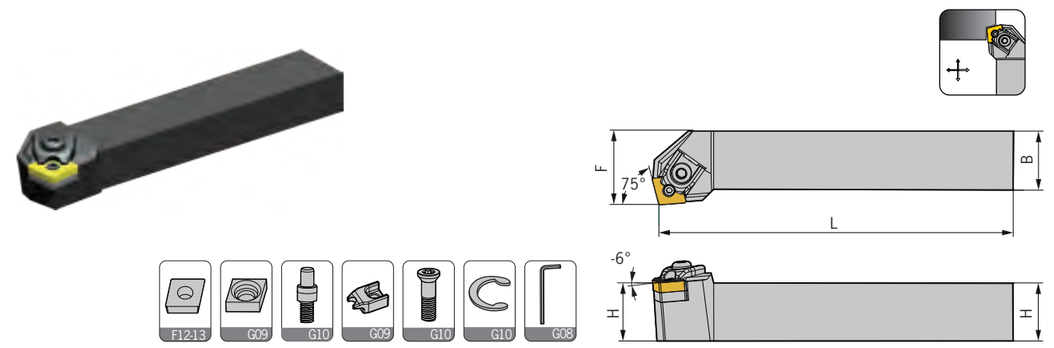

型號 Specification		H	B	L	F	刀片 Insert	刀墊 Shim	中心螺絲 Center screw	壓板 Clamp	壓板螺絲 Clamp screw	C型環 C Ring	扳手 Wrench
WCKNR/L	**2020K12**	20	20	125	25	CN..1204..	MC1204	WX0618	WYT16	WL0625	C6	L03,L04
	2525M12	25	25	150	32	CN..1204..	MC1204	WX0618	WYT16	WL0625	C6	L03,L04
	3232P12	32	32	170	40	CN..1204..	MC1204	WX0618	WYT16	WL0625	C6	L03,L04

適用 Suitable:德克刀片 DEREK Insert

Type W

WCMNN

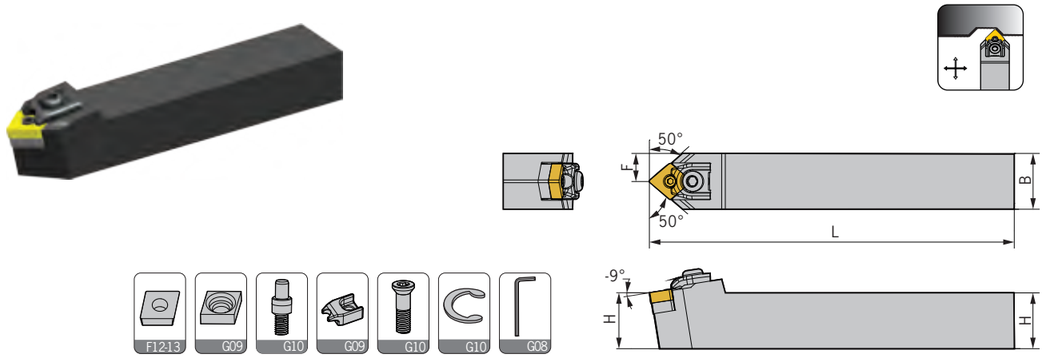

型號 Specification		H	B	L	F	刀片 Insert	刀墊 Shim	中心螺絲 Center screw	壓板 Clamp	壓板螺絲 Clamp screw	C型環 C Ring	扳手 Wrench
WCMNN	**2020K12**	20	20	125	25	CN..1204..	MC1204	WX0618	WYT16	WL0625	C6	L03,L04
	2525M12	25	25	150	32	CN..1204..	MC1204	WX0618	WYT16	WL0625	C6	L03,L04
	3232P12	32	32	170	40	CN..1204..	MC1204	WX0618	WYT16	WL0625	C6	L03,L04
	2525M16	25	25	150	32	CN..1606..	MC1604	WX0822	WYT16	WL0625	C6	L04
	3232P16	32	32	170	40	CN..1606..	MC1604	WX0822	WYT16	WL0625	C6	L04

適用 Suitable:德克刀片 DEREK Insert

WCLNR/L

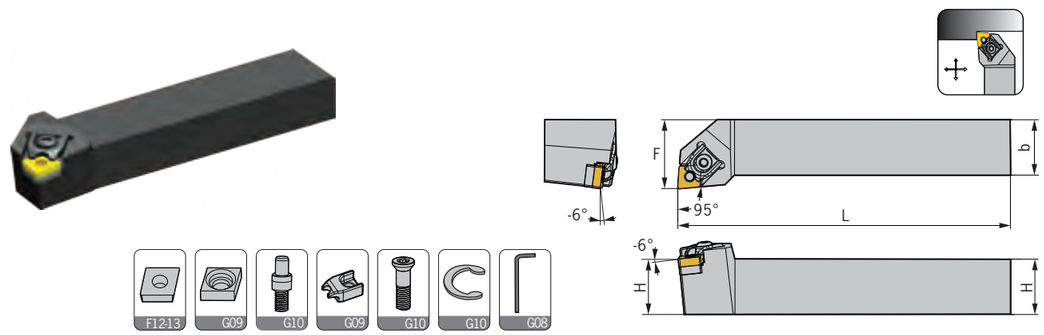

型號 Specification		H	B	L	F	刀片 Insert	刀墊 Shim	中心螺絲 Center screw	壓板 Clamp	壓板螺絲 Clamp screw	C型環 C Ring	扳手 Wrench
WCLNR/L	**2020K12**	20	20	125	25	CN..1204..	MC1204	WX0618	WYT16	WL0625	C6	L03,L04
	2525M12	25	25	150	32	CN..1204..	MC1204	WX0618	WYT16	WL0625	C6	L03,L04
	3232P12	32	32	170	40	CN..1204..	MC1204	WX0618	WYT16	WL0625	C6	L03,L04
	2525M16	25	25	150	32	CN..1606..	MC1604	WX0822	WYT16	WL0625	C6	L04
	3232P16	32	32	170	40	CN..1606..	MC1604	WX0822	WYT16	WL0625	C6	L04

適用 Suitable:德克刀片 DEREK Insert

Type W

WCBNR/L

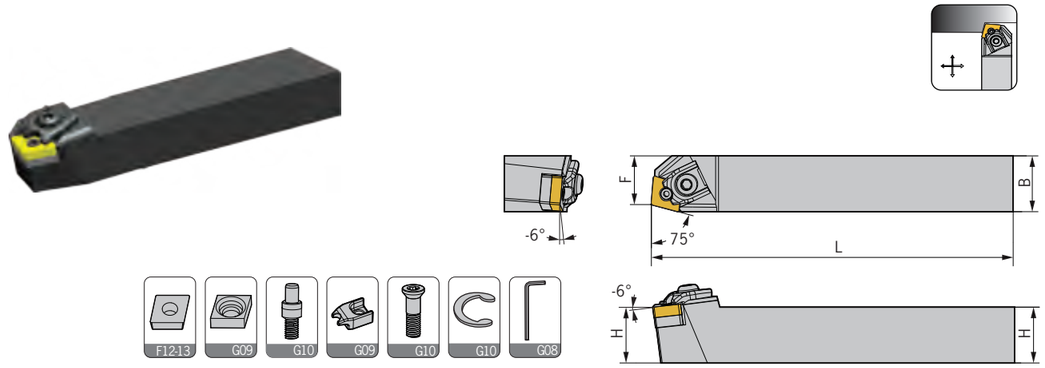

型號 Specification		H	B	L	F	刀片 Insert	刀墊 Shim	中心螺絲 Center screw	壓板 Clamp	壓板螺絲 Clamp screw	C型環 C Ring	扳手 Wrench
WCBNR/L	**2020K12**	20	20	125	25	CN..1204..	MC1204	WX0618	WYT16	WL0625	C6	L03,L04
	2525M12	25	25	150	32	CN..1204..	MC1204	WX0618	WYT16	WL0625	C6	L03,L04
	3232P12	32	32	170	40	CN..1204..	MC1204	WX0618	WYT16	WL0625	C6	L03,L04

適用 Suitable:德克刀片 DEREK Insert

WCMNN-40

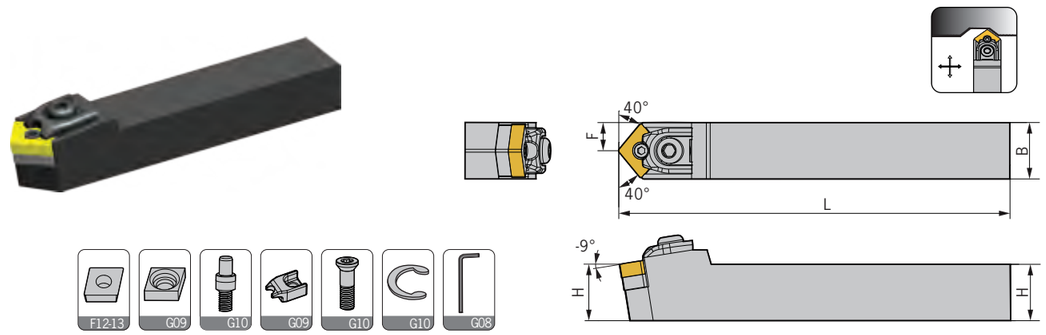

型號 Specification		H	B	L	F	刀片 Insert	刀墊 Shim	中心螺絲 Center screw	壓板 Clamp	壓板螺絲 Clamp screw	C型環 C Ring	扳手 Wrench
WCMNN	**2020K12-40**	20	20	125	25	CN..1204..	MC1204	WX0618	WYT16	WL0625	C6	L03,L04
	2525M12-40	25	25	150	32	CN..1204..	MC1204	WX0618	WYT16	WL0625	C6	L03,L04
	3232P12-40	32	32	170	40	CN..1204..	MC1204	WX0618	WYT16	WL0625	C6	L03,L04
	2525M16-40	25	25	150	32	CN..1606..	MC1604	WX0822	WYT16	WL0625	C6	L04
	3232P16-40	32	32	170	40	CN..1606..	MC1604	WX0822	WYT16	WL0625	C6	L04

適用 Suitable:德克刀片 DEREK Insert

Type W

WTJNR/L





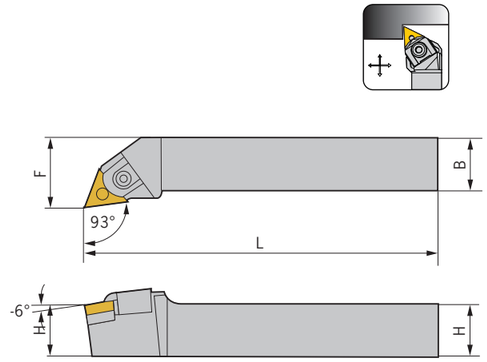

型號 Specification		H	B	L	F	刀片 Insert	刀墊 Shim	中心螺絲 Center screw	壓板 Clamp	壓板螺絲 Clamp screw	C型環 C Ring	扳手 Wrench
WTJNR/L	**1616H16**	16	16	100	20	TN..1604..	MT1603	WX0515	WYT16	WL0625	C6	L025,L04
	2020K16	20	20	125	25	TN..1604..	MT1603	WX0515	WYT16	WL0625	C6	L025,L04
	2525M16	25	25	150	32	TN..1604..	MT1603	WX0515	WYT16	WL0625	C6	L025,L04
	3232P16	32	32	170	40	TN..1604..	MT1603	WX0515	WYT16	WL0625	C6	L025,L04

適用 Suitable:德克刀片 DEREK Insert

WTQNR/L





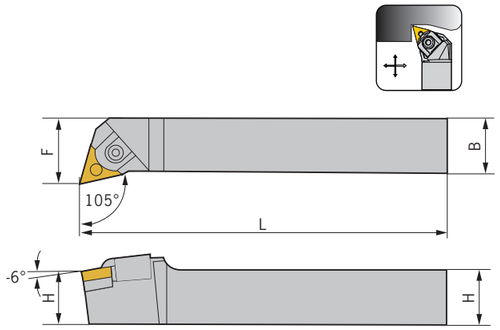

型號 Specification		H	B	L	F	刀片 Insert	刀墊 Shim	中心螺絲 Center screw	壓板 Clamp	壓板螺絲 Clamp screw	C型環 C Ring	扳手 Wrench
WTQNR/L	**1616H16**	16	16	100	20	TN..1604..	MT1603	WX0515	WYT16	WL0625	C6	L025,L04
	2020K16	20	20	125	25	TN..1604..	MT1603	WX0515	WYT16	WL0625	C6	L025,L04
	2525M16	25	25	150	32	TN..1604..	MT1603	WX0515	WYT16	WL0625	C6	L025,L04
	3232P16	32	32	170	40	TN..1604..	MT1603	WX0515	WYT16	WL0625	C6	L025,L04

適用 Suitable:德克刀片 DEREK Insert

Type W

WTENN





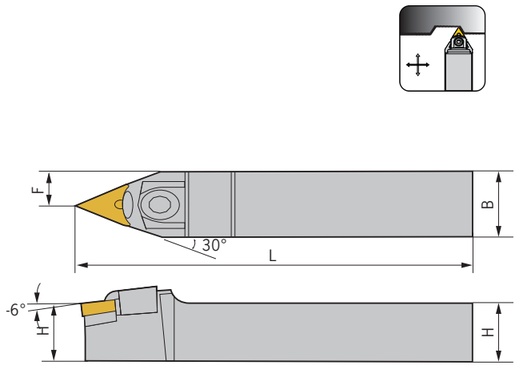

型號 Specification		H	B	L	F	刀片 Insert	刀墊 Shim	中心螺絲 Center screw	壓板 Clamp	壓板螺絲 Clamp screw	C型環 C Ring	扳手 Wrench
WTENN	**1616H16**	16	16	100	8	TN..1604..	MT1603	WX0515	WYT16	WL0625	C6	L025,L04
	2020K16	20	20	125	10	TN..1604..	MT1603	WX0515	WYT16	WL0625	C6	L025,L04
	2525M16	25	25	150	12.5	TN..1604..	MT1603	WX0515	WYT16	WL0625	C6	L025,L04
	3232P16	32	32	170	16	TN..1604..	MT1603	WX0515	WYT16	WL0625	C6	L025,L04

適用 Suitable:德克刀片 DEREK Insert

WWLNR/L





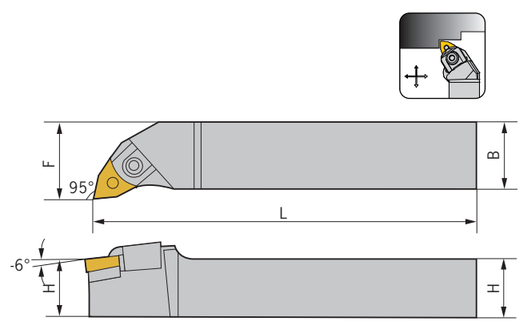

型號 Specification		H	B	L	F	刀片 Insert	刀墊 Shim	中心螺絲 Center screw	壓板 Clamp	壓板螺絲 Clamp screw	C型環 C Ring	扳手 Wrench
WWLNR/L	**2020K08**	20	20	125	25	WN..0804..	MW0804	WX0618	WYW08	ML0825	C8	L03,L04
	2525M08	25	25	150	32	WN..0804..	MW0804	WX0618	WYW08	ML0825	C8	L03,L04
	3232P08	32	32	170	40	WN..0804..	MW0804	WX0618	WYW08	ML0825	C8	L03,L04

適用 Suitable:德克刀片 DEREK Insert

Type S

SCACR/L



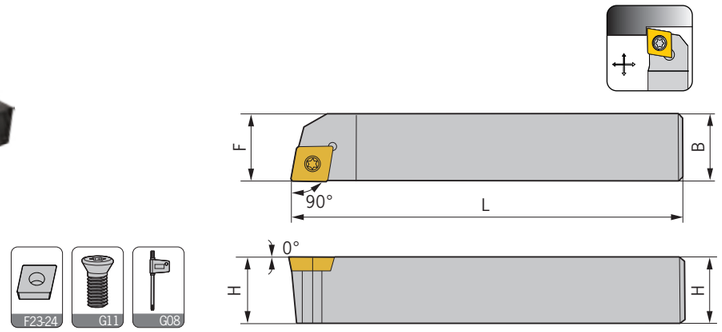

型號 Specification		H	B	L	F	刀片 Insert	螺絲 Screw	扳手 Wrench
SCACR/L	0808D06	8	8	60	8	CC..0602..	M2.5*7	Q08
	1010E06	10	10	70	10	CC..0602..	M2.5*7	Q08
	1212F06	12	12	80	12	CC..0602..	M2.5*7	Q08
	1212F09	12	12	80	12	CC..09T3..	M3.5*9	Q15
	2020K09	20	20	125	20	CC..09T3..	M3.5*9	Q15
	2525M09	25	25	150	25	CC..09T3..	M3.5*9	Q15
	1616H12	16	16	100	16	CC..1204..	M5*12	Q20
	2020K12	20	20	125	20	CC..1204..	M5*12	Q20
	2525M12	25	25	150	25	CC..1204..	M5*12	Q20

適用 Suitable:德克刀片 DEREK Insert

SCBCR/L



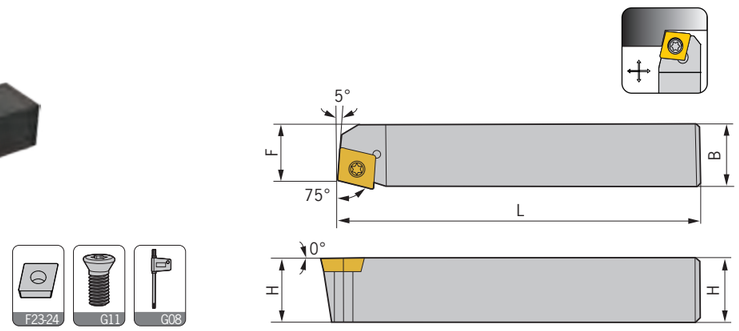

型號 Specification		H	B	L	F	刀片 Insert	螺絲 Screw	扳手 Wrench
SCBCR/L	1010F06	10	10	80	8.5	CC..0602..	M2.5*7	Q08
	1212H06	12	12	100	10	CC..0602..	M2.5*7	Q08
	1212H09	12	12	100	10	CC..09T3..	M3.5*9	Q15
	1616H09	16	16	100	13	CC..09T3..	M3.5*9	Q15
	2020K09	20	20	125	17	CC..09T3..	M3.5*9	Q15
	2525M09	25	25	150	22	CC..09T3..	M3.5*9	Q15
	2020K12	20	20	125	17	CC..1204..	M5*12	Q20
	2525M12	25	25	150	22	CC..1204..	M5*12	Q20
	3232P12	32	32	170	29	CC..1204..	M5*12	Q20

適用 Suitable:德克刀片 DEREK Insert

Type S

SCFCR/L



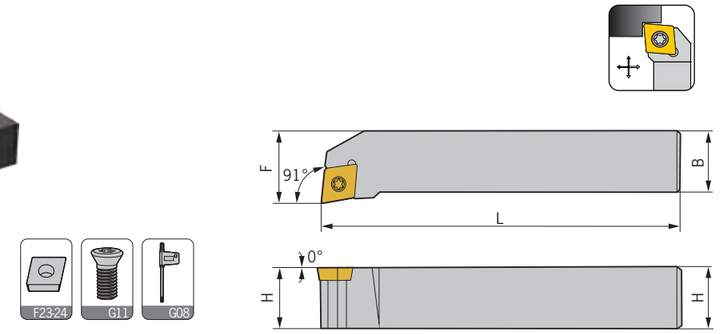

型號 Specification		H	B	L	F	刀片 Insert	螺絲 Screw	扳手 Wrench
SCFCR/L	1010E06	10	10	70	12	CC..0602..	M2.5*7	Q08
	1212F06	12	12	80	16	CC..0602..	M2.5*7	Q08
	1212F09	12	12	80	16	CC..09T3..	M3.5*9	Q15
	1616H09	16	16	100	20	CC..09T3..	M3.5*9	Q15
	2020K09	20	20	125	25	CC..09T3..	M3.5*9	Q15
	2525M09	25	25	150	32	CC..09T3..	M3.5*9	Q15
	2525M12	25	25	150	32	CC..1204..	M5*12	Q20

適用 Suitable:德克刀片 DEREK Insert

SCKCR/L



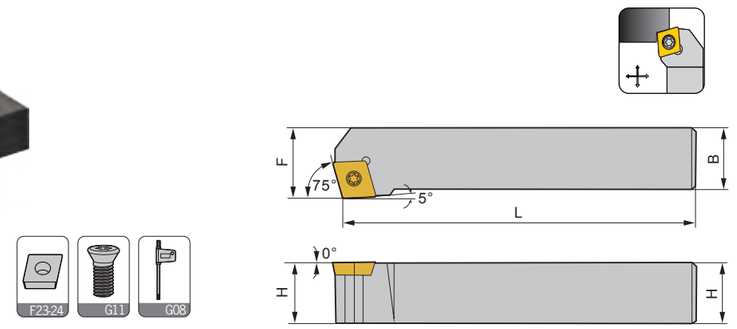

型號 Specification		H	B	L	F	刀片 Insert	螺絲 Screw	扳手 Wrench
SCKCR/L	1212H09	12	12	100	16	CC..09T3..	M3.5*9	Q15
	1616H09	16	16	100	20	CC..09T3..	M3.5*9	Q15
	2020K09	20	20	125	25	CC..09T3..	M3.5*9	Q15
	2525M09	25	25	150	32	CC..09T3..	M3.5*9	Q15
	2020K12	20	20	125	25	CC..1204..	M5*12	Q20
	2525M12	25	25	150	32	CC..1204..	M5*12	Q20
	3232P12	32	32	170	40	CC..1204..	M5*12	Q20

適用 Suitable:德克刀片 DEREK Insert

Type S

SCLCR/L



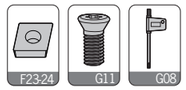

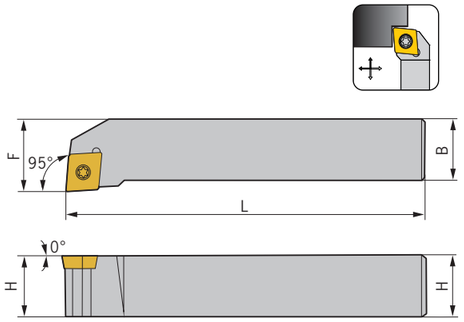

型號 Specification		H	B	L	F	刀片 Insert	螺絲 Screw	扳手 Wrench
SCLCR/L	**1212F06**	12	12	80	16	CC..0602..	M2.5*7	Q08
	1616H06	16	16	100	20	CC..0602..	M2.5*7	Q08
	1212F09	12	12	80	16	CC..09T3..	M3.5*9	Q15
	1616H09	16	16	100	20	CC..09T3..	M3.5*9	Q15
	2020K09	20	20	125	25	CC..09T3..	M3.5*9	Q15
	2525M09	25	25	150	32	CC..09T3..	M3.5*9	Q15
	3232P09	32	32	170	40	CC..09T3..	M3.5*9	Q15
	1616H12	16	16	100	20	CC..1204..	M5*12	Q20
	2020K12	20	20	125	25	CC..1204..	M5*12	Q20
	2525M12	25	25	150	32	CC..1204..	M5*12	Q20
	3232P12	32	32	170	40	CC..1204..	M5*12	Q20

適用 Suitable:德克刀片 DEREK Insert

SCMCN



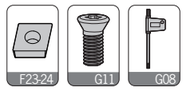

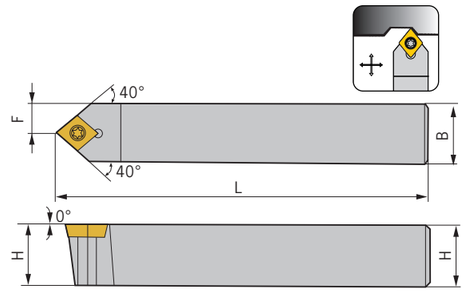

型號 Specification		H	B	L	F	刀片 Insert	螺絲 Screw	扳手 Wrench
SCMCN	**0808F06**	8	8	80	4	CC..0602..	M2.5*7	Q08
	1010E06	10	10	70	5	CC..0602..	M2.5*7	Q08
	1212F06	12	12	80	6	CC..0602..	M2.5*7	Q08
	1212F09	12	12	80	6	CC..09T3..	M3.5*9	Q15
	1616H09	16	16	100	8	CC..09T3..	M3.5*9	Q15
	2020K09	20	20	125	10	CC..09T3..	M3.5*9	Q15
	2525M09	25	25	150	12.5	CC..09T3..	M3.5*9	Q15
	2020K12	20	20	125	10	CC..1204..	M5*12	Q20
	2525M12	25	25	150	12.5	CC..1204..	M5*12	Q20
	3232P12	32	32	170	16	CC..1204..	M5*12	Q20

適用 Suitable:德克刀片 DEREK Insert

Type S

SCMCN-40



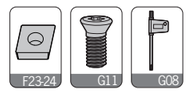

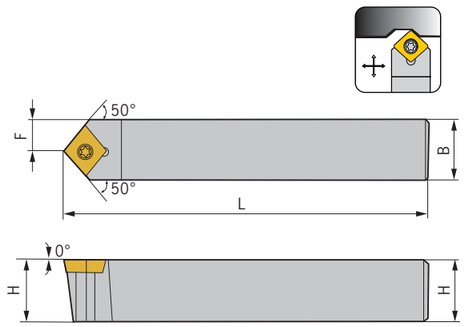

型號 Specification		H	B	L	F	刀片 Insert	螺絲 Screw	扳手 Wrench
SCMCN	**1010E06-40**	10	10	70	5	CC..0602..	M2.5*7	Q08
	1212F06-40	12	12	80	6	CC..0602..	M2.5*7	Q08
	1212F09-40	12	12	80	6	CC..09T3..	M3.5*9	Q15
	1616H09-40	16	16	100	8	CC..09T3..	M3.5*9	Q15
	2020K09-40	20	20	125	10	CC..09T3..	M3.5*9	Q15
	2525M09-40	25	25	150	12.5	CC..09T3..	M3.5*9	Q15
	2020K12-40	20	20	125	10	CC..1204..	M5*12	Q20
	2525M12-40	25	25	150	12.5	CC..1204..	M5*12	Q20
	3232P12-40	32	32	170	16	CC..1204..	M5*12	Q20

適用 Suitable:德克刀片 DEREK Insert

SDACR/L



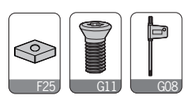

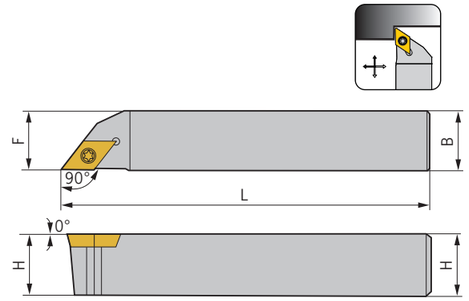

型號 Specification		H	B	L	F	刀片 Insert	螺絲 Screw	扳手 Wrench
SDACR/L	**0808D07**	8	8	60	8	DC..0702..	M2.5*7	Q08
	1010E07	10	10	70	10	DC..0702..	M2.5*7	Q08
	1212F07	12	12	80	12	DC..0702..	M2.5*7	Q08
	1616K07	16	16	125	16	DC..0702..	M2.5*7	Q08
	1212F11	12	12	80	12	DC..11T3..	M3.5*9	Q15
	1616H11	16	16	100	16	DC..11T3..	M3.5*9	Q15
	2020K11	20	20	125	20	DC..11T3..	M3.5*9	Q15
	2525M11	25	25	150	25	DC..11T3..	M3.5*9	Q15

適用 Suitable:德克刀片 DEREK Insert

Type S

SDFCR/L



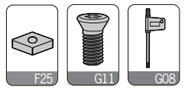

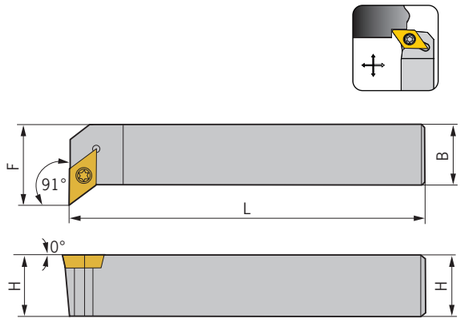

型號 Specification		H	B	L	F	刀片 Insert	螺絲 Screw	扳手 Wrench
SDFCR/L	1212F07	12	12	80	16	DC..0702..	M2.5*7	Q08
	1616H11	16	16	100	20	DC..11T3..	M3.5*9	Q15
	2020K11	20	20	125	25	DC..11T3..	M3.5*9	Q15
	2525M11	25	25	150	32	DC..11T3..	M3.5*9	Q15

適用 Suitable:德克刀片 DEREK Insert

SDJCR/L



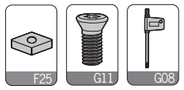

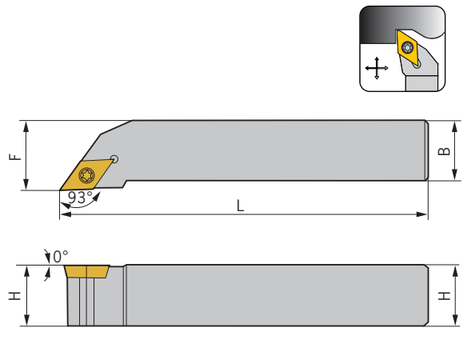

型號 Specification		H	B	L	F	刀片 Insert	螺絲 Screw	扳手 Wrench
SDJCR/L	1010E07	10	10	70	12	DC..0702..	M2.5*7	Q08
	1212F07	12	12	80	16	DC..0702..	M2.5*7	Q08
	1616H07	16	16	100	20	DC..0702..	M2.5*7	Q08
	2020K07	20	20	125	25	DC..0702..	M2.5*7	Q08
	1212F11	12	12	80	16	DC..11T3..	M3.5*9	Q15
	1616H11	16	16	100	20	DC..11T3..	M3.5*9	Q15
	2020K11	20	20	125	25	DC..11T3..	M3.5*9	Q15
	2525M11	25	25	150	32	DC..11T3..	M3.5*9	Q15
	3232P11	32	32	170	40	DC..11T3..	M3.5*9	Q15
	4040R11	40	40	200	50	DC..11T3..	M3.5*9	Q15

適用 Suitable:德克刀片 DEREK Insert

Type S

SDNCN



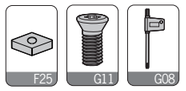

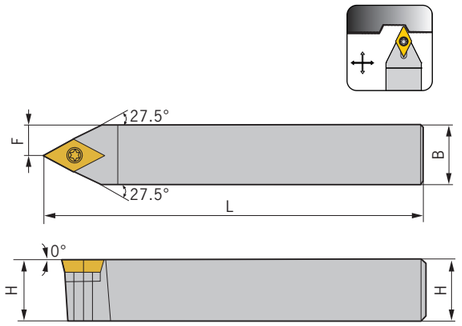

型號 Specification		H	B	L	F	刀片 Insert	螺絲 Screw	扳手 Wrench
SDNCN	0808D07	8	8	60	4	DC..0702..	M2.5*7	Q08
	1010E07	10	10	70	5	DC..0702..	M2.5*7	Q08
	1212F07	12	12	80	6	DC..0702..	M2.5*7	Q08
	1616H07	16	16	100	8	DC..0702..	M2.5*7	Q08
	1212F11	12	12	80	6	DC..11T3..	M3.5*9	Q15
	1616H11	16	16	100	8	DC..11T3..	M3.5*9	Q15
	2020K11	20	20	125	10	DC..11T3..	M3.5*9	Q15
	2525M11	25	25	150	12.5	DC..11T3..	M3.5*9	Q15
	3232P11	32	32	170	16	DC..11T3..	M3.5*9	Q15

適用 Suitable:德克刀片 DEREK Insert

SDQCR/L



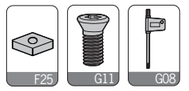

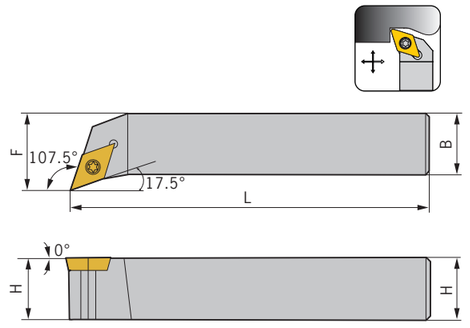

型號 Specification		H	B	L	F	刀片 Insert	螺絲 Screw	扳手 Wrench
SDQCR/L	1010E07	10	10	70	12	DC..0702..	M2.5*7	Q08
	1212F07	12	12	80	16	DC..0702..	M2.5*7	Q08
	1212F11	12	12	80	16	DC..11T3..	M3.5*9	Q15
	1616H11	16	16	100	20	DC..11T3..	M3.5*9	Q15
	2020K11	20	20	125	25	DC..11T3..	M3.5*9	Q15
	2525M11	25	25	150	32	DC..11T3..	M3.5*9	Q15

適用 Suitable:德克刀片 DEREK Insert

Type S

SRACR/L



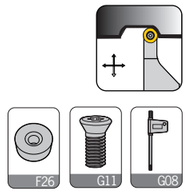

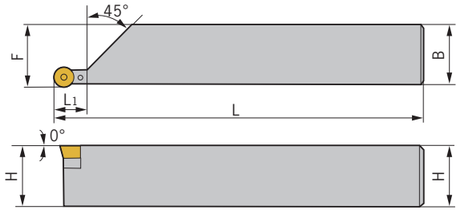

型號 Specification		H	B	L	L1	F	刀片 Insert	螺絲 Screw	扳手 Wrench
SRACR/L	**1010E05**	10	10	70	10	10.3	RC..0502..	M2.2*5	Q06
	1212F05	12	12	80	10	12.3	RC..0502..	M2.2*5	Q06
	1616H05	16	16	100	10	16.3	RC..0502..	M2.2*5	Q06
	2020K05	20	20	125	10	20.3	RC..0502..	M2.2*5	Q06
	2525M05	25	25	150	10	25.3	RC..0502..	M2.2*5	Q06
	3232P05	32	32	170	10	32.3	RC..0502..	M2.2*5	Q06
	1212F06	12	12	80	12	12.4	RC..0602..	M2.5*7	Q08
	1616H06	16	16	100	12	16.4	RC..0602..	M2.5*7	Q08
	2020K06	20	20	125	12	20.4	RC..0602..	M2.5*7	Q08
	2525M06	25	25	150	12	25.4	RC..0602..	M2.5*7	Q08
	1616H08	16	16	100	16	16.5	RC..0803..	M3*7	Q08
	2020K08	20	20	125	16	20.5	RC..0803..	M3*7	Q08
	2525M08	25	25	150	16	25.5	RC..0803..	M3*7	Q08
	2020K10	20	20	125	20.3	20.4	RC..1003..	M3.5*9	Q15
	2525M10	25	25	150	20.3	25.4	RC..1003..	M3.5*9	Q15

適用 Suitable:德克刀片 DEREK Insert

SRDCN



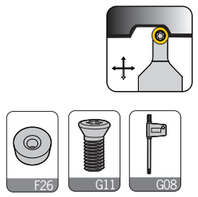

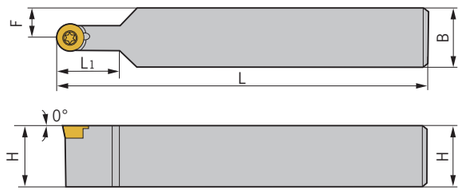

型號 Specification		H	B	L	L1	F	刀片 Insert	螺絲 Screw	扳手 Wrench
SRDCN	**1010E06**	10	10	70	12	5	RC..0602..	M2.5*7	Q08
	1212F06	12	12	80	12	6	RC..0602..	M2.5*7	Q08
	1616H06	16	16	100	12	8	RC..0602..	M2.5*7	Q08
	2020K06	20	20	125	12	10	RC..0602..	M2.5*7	Q08
	2525M06	25	25	150	12	12.5	RC..0602..	M2.5*7	Q08
	1010E08	10	10	70	16	5	RC..0803..	M3*7	Q08
	1212F08	12	12	80	16	6	RC..0803..	M3*7	Q08
	1616H08	16	16	100	16	8	RC..0803..	M3*7	Q08
	2020K08	20	20	125	16	10	RC..0803..	M3*7	Q08
	2525M08	25	25	150	16	12.5	RC..0803..	M3*7	Q08
	1010E10	10	10	70	20.3	5	RC..1003..	M3.5*9	Q15
	1212F10	12	12	80	20.3	6	RC..1003..	M3.5*9	Q15
	1616H10	16	16	100	20.3	8	RC..1003..	M3.5*9	Q15
	2020K10	20	20	125	20.3	10	RC..1003..	M3.5*9	Q15
	2525M10	25	25	150	20.3	12.5	RC..1003..	M3.5*9	Q15

適用 Suitable:德克刀片 DEREK Insert

Type S

SRGCR/L





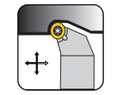





型號 Specification		H	B	L	F	刀片 Insert	螺絲 Screw	扳手 Wrench
SRGCR/L	**1212F05**	12	12	80	16	RC..0502..	M2.2*5	Q06
	1616H05	16	16	100	20	RC..0502..	M2.2*5	Q06
	2020K05	20	20	125	25	RC..0502..	M2.2*5	Q06
	2525M05	25	25	150	32	RC..0502..	M2.2*5	Q06
	1212F06	12	12	80	16	RC..0602..	M2.5*7	Q08
	1616H06	16	16	100	20	RC..0602..	M2.5*7	Q08
	2020K06	20	20	125	25	RC..0602..	M2.5*7	Q08
	2525M06	25	25	150	32	RC..0602..	M2.5*7	Q08
	1616H08	16	16	100	20	RC..0803..	M3*7	Q08
	2020K08	20	20	125	25	RC..0803..	M3*7	Q08
	2525M08	25	25	150	32	RC..0803..	M3*7	Q08

適用 Suitable:德克刀片 DEREK Insert

STACR/L

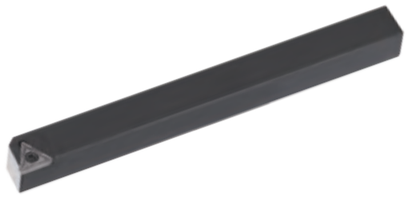

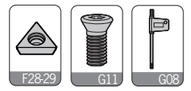







型號 Specification		H	B	L	F	刀片 Insert	中心螺絲 Center screw	扳手 Wrench
STACR/L	**0808H09**	8	8	100	8.30	TC..0902..	M2.2X7	Q06
	1010H11	10	10	100	10.3	TC..1102..	M2.5X7	Q08
	1212K11	12	12	125	12.3	TC..1102..	M2.5X7	Q08

適用 Suitable:德克刀片 DEREK Insert

Type S

STECR/L



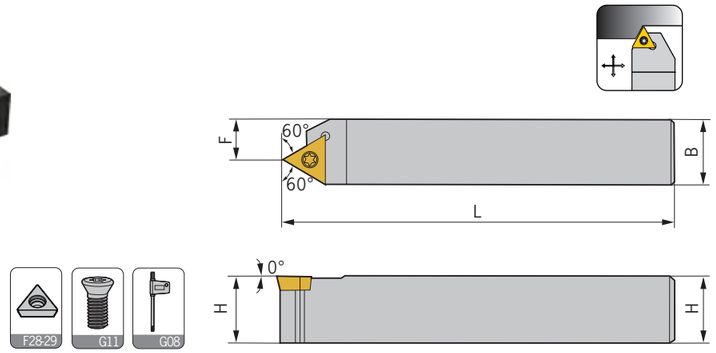

型號 Specification		H	B	L	F	刀片 Insert	螺絲 Screw	扳手 Wrench
STECR/L	**2020K11**	20	20	125	14.5	TC..1102..	M2.5*7	Q08
	2525M11	25	25	150	19.5	TC..1102..	M2.5*7	Q08
	2020K16	20	20	125	12	TC..16T3..	M3.5*9	Q15
	2525M16	25	25	150	17	TC..16T3..	M3.5*9	Q15

適用 Suitable:德克刀片 DEREK Insert

STFCR/L



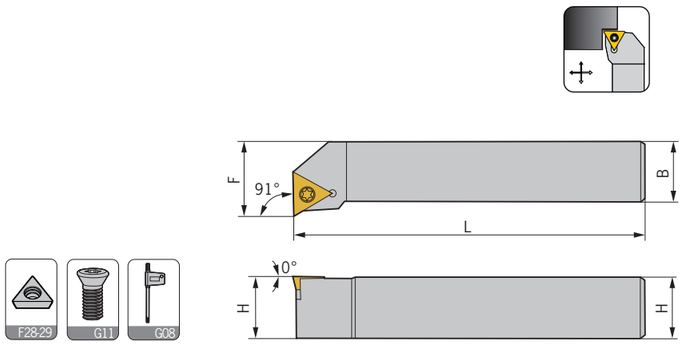

型號 Specification		H	B	L	F	刀片 Insert	螺絲 Screw	扳手 Wrench
STFCR/L	**1212F09**	12	12	80	16	TC..0902..	M2.2*7	Q06
	1212F11	12	12	80	16	TC..1102..	M2.5*7	Q08
	1616H11	16	16	100	20	TC..1102..	M2.5*7	Q08
	1616H16	16	16	100	20	TC..16T3..	M3.5*9	Q15
	2020K16	20	20	125	25	TC..16T3..	M3.5*9	Q15
	2525M16	25	25	150	32	TC..16T3..	M3.5*9	Q15
	3232P16	32	32	170	40	TC..16T3..	M3.5*9	Q15

適用 Suitable:德克刀片 DEREK Insert

Type S

STGCR/L



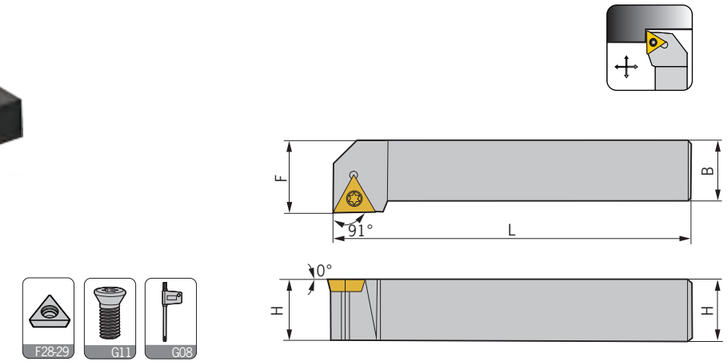

型號 Specification		H	B	L	F	刀片 Insert	螺絲 Screw	扳手 Wrench
STGCR/L	**1010F09**	10	10	80	12	TC..0902..	M2.2*7	Q06
	1616H11	16	16	100	20	TC..1102..	M2.5*7	Q08
	2020K16	20	20	125	25	TC..16T3..	M3.5*9	Q15
	2525M16	25	25	150	32	TC..16T3..	M3.5*9	Q15
	3232P16	32	32	170	40	TC..16T3..	M3.5*9	Q15

適用 Suitable:德克刀片 DEREK Insert

STJCR/L



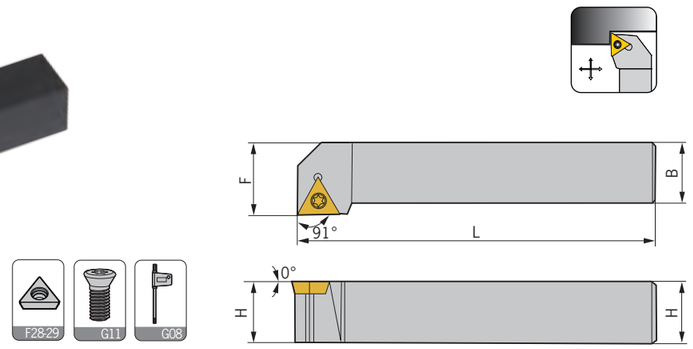

型號 Specification		H	B	L	F	刀片 Insert	中心螺絲 Center screw	扳手 Wrench
STJCR/L	**1616H11**	16	16	100	20	TC..1102..	M2.5X7	Q08
	2020K16	20	20	125	25	TC..16T3..	M3.5X9	Q15
	2525M16	25	25	150	32	TC..16T3..	M3.5X9	Q15

適用 Suitable:德克刀片 DEREK Insert

Type S

STUCR/L



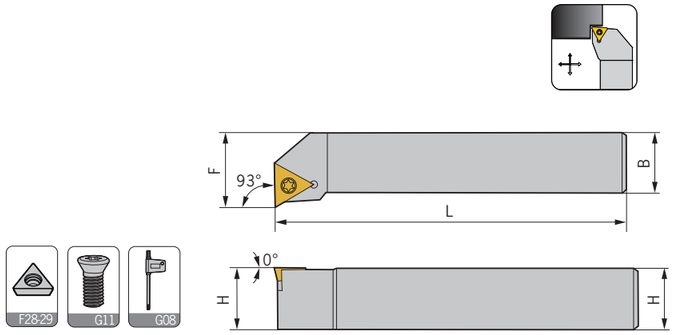

型號 Specification		H	B	L	F	刀片 Insert	螺絲 Screw	扳手 Wrench
STUCR/L	1212F11	12	12	80	16	TC..1102..	M2.5*7	Q08
	1616H11	16	16	100	20	TC..1102..	M2.5*7	Q08
	2020K16	20	20	125	25	TC..16T3..	M3.5*9	Q15
	2525M16	25	25	150	32	TC..16T3..	M3.5*9	Q15
	3232P16	32	32	170	40	TC..16T3..	M3.5*9	Q15

適用 Suitable:德克刀片 DEREK Insert

STWCR/L



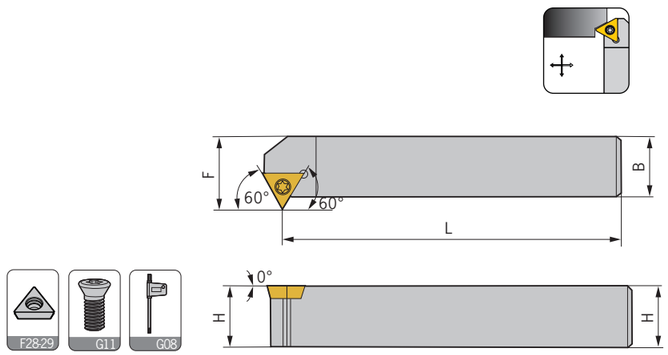

型號 Specification		H	B	L	F	刀片 Insert	螺絲 Screw	扳手 Wrench
STWCR/L	1212F11	12	12	80	15.3	TC..1102..	M2.5*7	Q08
	1616H11	16	16	100	19.3	TC..1102..	M2.5*7	Q08
	2020K11	20	20	125	23.3	TC..1102..	M2.5*7	Q08
	2525M11	25	25	150	28.3	TC..1102..	M2.5*7	Q08
	1616H16	16	16	100	21	TC..16T3..	M3.5*9	Q15
	2020K16	20	20	125	26	TC..16T3..	M3.5*9	Q15
	2525M16	25	25	150	31	TC..16T3..	M3.5*9	Q15
	3232P16	32	32	170	38	TC..16T3..	M3.5*9	Q15

適用 Suitable:德克刀片 DEREK Insert

Type S

SSBCR/L



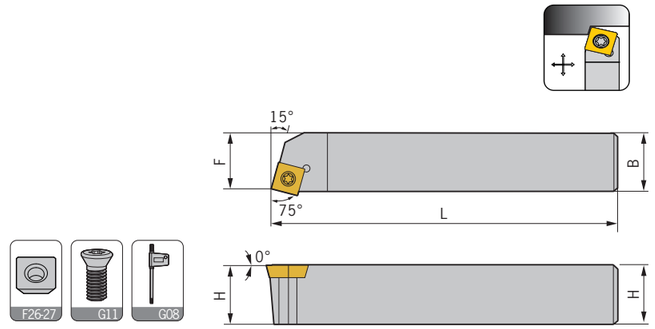

型號 Specification		H	B	L	F	刀片 Insert	螺絲 Screw	扳手 Wrench
SSBCR/L	1212F09	12	12	80	9.5	SC..09T3..	M3.5*9	Q15
	1616H09	16	16	100	13	SC..09T3..	M3.5*9	Q15
	2020K09	20	20	125	17	SC..09T3..	M3.5*9	Q15
SSBCN	1616H12	20	20	125	17	SC..1204..	M5*12	Q20
	2525M12	25	25	150	22	SC..1204..	M5*12	Q20
	2020K12	16	16	100	13	SC..1204..	M5*12	Q20

適用 Suitable:德克刀片 DEREK Insert

SSDCN



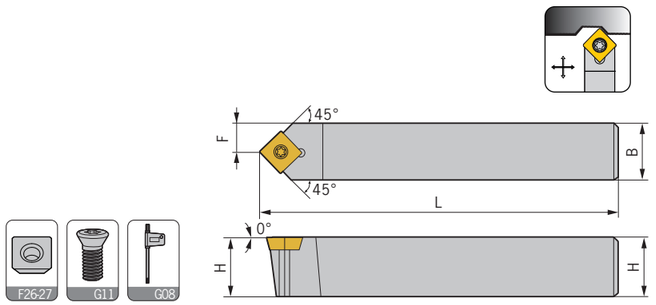

型號 Specification		H	B	L	F	刀片 Insert	螺絲 Screw	扳手 Wrench
SSDCN	1212F09	12	12	80	6	SC..09T3..	M3.5*9	Q15
	1616H09	16	16	100	8	SC..09T3..	M3.5*9	Q15
	2020K09	20	20	125	10	SC..09T3..	M3.5*9	Q15
	2525M09	25	25	150	12.5	SC..09T3..	M3.5*9	Q15
	1616H12	16	16	100	8	SC..1204..	M5*12	Q20
	2020K12	20	20	125	10	SC..1204..	M5*12	Q20
	2525M12	25	25	150	12.5	SC..1204..	M5*12	Q20

適用 Suitable:德克刀片 DEREK Insert

Type S

SSKCR/L



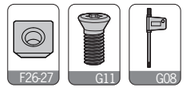

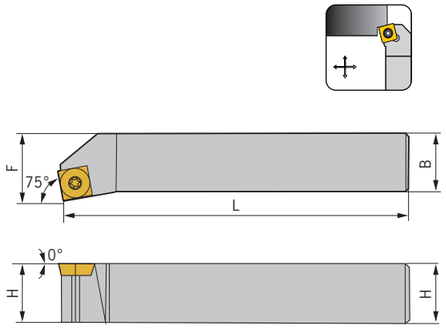

型號 Specification		H	B	L	F	刀片 Insert	螺絲 Screw	扳手 Wrench
SSKCR/L	1212F09	12	12	80	16	SC..09T3..	M3.5*9	Q15
	1616H09	16	16	100	20	SC..09T3..	M3.5*9	Q15
	2020K09	20	20	125	25	SC..09T3..	M3.5*9	Q15
	2525M09	25	25	150	32	SC..09T3..	M3.5*9	Q15
	2525M12	25	25	150	32	SC..1204..	M5*12	Q20

適用 Suitable:德克刀片 DEREK Insert

SSSCR/L



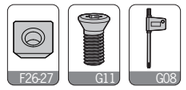

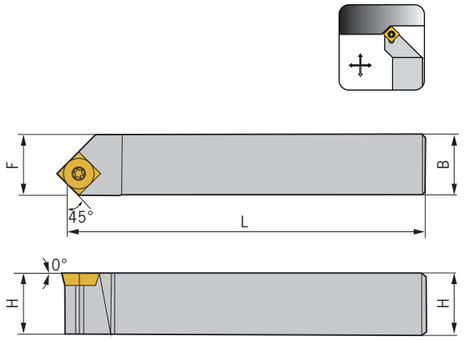

型號 Specification		H	B	L	F	刀片 Insert	螺絲 Screw	扳手 Wrench
SSSCR/L	1212F09	12	12	80	16	SC..09T3..	M3.5*9	Q15
	1616H09	16	16	100	20	SC..09T3..	M3.5*9	Q15
	2020K09	20	20	125	25	SC..09T3..	M3.5*9	Q15
	2525M09	25	25	150	32	SC..09T3..	M3.5*9	Q15
	2525M12	25	25	150	32	SC..1204..	M5*12	Q20

適用 Suitable:德克刀片 DEREK Insert

Type S

SVJ*R/L



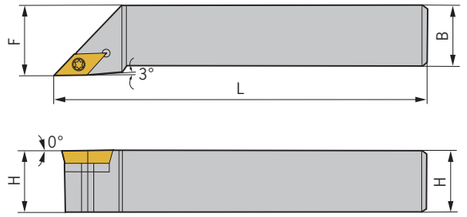

型號 Specification		H	B	L	F	刀片 Insert	螺絲 Screw	扳手 Wrench
SVJBR/L	2020K1102	20	20	125	25	VB..1102..	M2.5*7	Q08
	1212F11	12	12	80	16	VB..1103..	M2.5*7	Q08
	1616H11	16	16	100	20	VB..1103..	M2.5*7	Q08
	2020K11	20	20	125	25	VB..1103..	M2.5*7	Q08
	2525M11	25	25	150	32	VB..1103..	M2.5*7	Q08
	1616H16	16	16	100	20	VB..1604..	M3.5*9	Q15
	2020K16	20	20	125	25	VB..1604..	M3.5*9	Q15
	2525M16	25	25	150	32	VB..1604..	M3.5*9	Q15
	3232P16	32	32	170	40	VB..1604..	M3.5*9	Q15
SVJCR/L	1212F11	12	12	80	16	VC..1103..	M2.5*7	Q08
	1616H11	16	16	100	20	VC..1103..	M2.5*7	Q08
	2020K11	20	20	125	25	VC..1103..	M2.5*7	Q08
	2525M11	25	25	150	32	VC..1103..	M2.5*7	Q08
	1616H16	16	16	100	20	VC..1604..	M3.5*9	Q15
	2020K16	20	20	125	25	VC..1604..	M3.5*9	Q15
	2525M16	25	25	150	32	VC..1604..	M3.5*9	Q15
	3232P16	32	32	170	40	VC..1604..	M3.5*9	Q15

適用 Suitable:德克刀片 DEREK Insert

SVQ*R/L





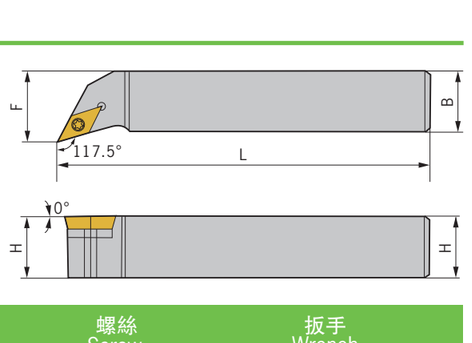

型號 Specification		H	B	L	F	刀片 Insert	螺絲 Screw	扳手 Wrench
SVQBR/L	1616H11	16	16	100	20	VB..1103..	M2.5*7	Q08
	2020K11	20	20	125	25	VB..1103..	M2.5*7	Q08
	1616H16	16	16	100	20	VB..1604..	M3.5*9	Q15
	2020K16	20	20	125	25	VB..1604..	M3.5*9	Q15
	2525M16	25	25	150	32	VB..1604..	M3.5*9	Q15
	3232P16	32	32	170	40	VB..1604..	M3.5*9	Q15
SVQCR/L	1616H11	16	16	100	20	VC..1103..	M2.5*7	Q08
	2020K11	20	20	125	25	VC..1103..	M2.5*7	Q08
	1616H16	16	16	100	20	VC..1604..	M3.5*9	Q15
	2020K16	20	20	125	25	VC..1604..	M3.5*9	Q15
	2525M16	25	25	150	32	VC..1604..	M3.5*9	Q15
	3232P16	32	32	170	40	VC..1604..	M3.5*9	Q15

適用 Suitable:德克刀片 DEREK Insert

Type S

SVU*R/L



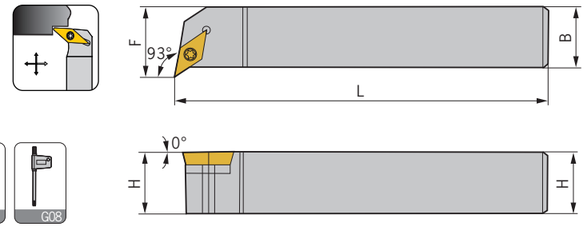

型號 Specification		H	B	L	F	刀片 Insert	螺絲 Screw	扳手 Wrench
SVUBR/L	1616H11	16	16	100	20	VB..1103..	M2.5*7	Q08
	1616H16	16	16	100	29	VB..1604..	M3.5*9	Q15
	2020K16	20	20	125	30	VB..1604..	M3.5*9	Q15
	2525M16	25	25	150	32	VB..1604..	M3.5*9	Q15
SVUCR/L	1616H11	16	16	100	20	VC..1103..	M2.5*7	Q08
	1616H16	16	16	100	29	VC..1604..	M3.5*9	Q15
	2020K16	20	20	125	30	VC..1604..	M3.5*9	Q15
	2525M16	25	25	150	32	VC..1604..	M3.5*9	Q15

適用 Suitable:德克刀片 DEREK Insert

SVV*N



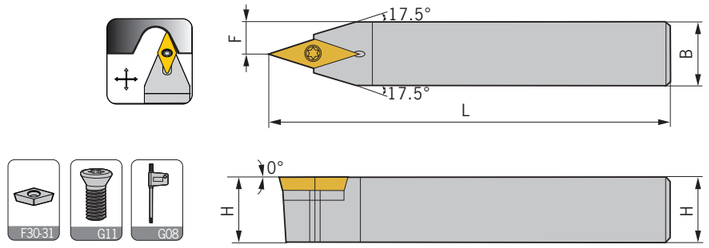

型號 Specification		H	B	L	F	刀片 Insert	螺絲 Screw	扳手 Wrench
SVVBN	1212F11	12	12	80	6	VB..1103..	M2.5*7	Q08
	1616H11	16	16	100	8	VB..1103..	M2.5*7	Q08
	2020K11	20	20	125	10	VB..1103..	M2.5*7	Q08
	2525M11	25	25	150	12.5	VB..1103..	M2.5*7	Q08
	1616H16	16	16	100	8	VB..1604..	M3.5*9	Q15
	2020K16	20	20	125	10	VB..1604..	M3.5*9	Q15
	2525M16	25	25	150	12.5	VB..1604..	M3.5*9	Q15
	3232P16	32	32	170	16	VB..1604..	M3.5*9	Q15
SVVCN	1212F11	12	12	80	6	VC..1103..	M2.5*7	Q08
	1616H11	16	16	100	8	VC..1103..	M2.5*7	Q08
	2020K11	20	20	125	10	VC..1103..	M2.5*7	Q08
	2525M11	25	25	150	12.5	VC..1103..	M2.5*7	Q08
	1616H16	16	16	100	8	VC..1604..	M3.5*9	Q15
	2020K16	20	20	125	10	VC..1604..	M3.5*9	Q15
	2525M16	25	25	150	12.5	VC..1604..	M3.5*9	Q15
	3232P16	32	32	170	16	VC..1604..	M3.5*9	Q15

適用 Suitable:德克刀片 DEREK Insert

Type M

MCKNR/L



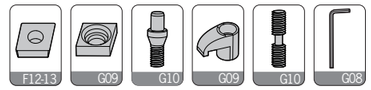

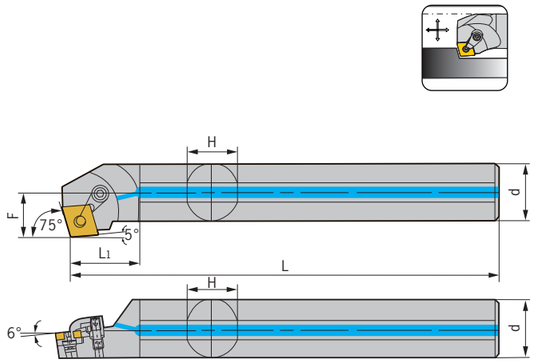

型號 Specification	最小加工径 Min dia	d	F	L	L1	H	a	刀片 Insert	刀墊 Shim	中心螺絲 Center screw	壓板 Clamp	壓板螺絲 Clamp screw	扳手 Wrench	出水孔 Water hole
S20Q-MCKNR/L12	26	20	14	180	34	18	15°	CN..1204..	-	MX0613	MY0515	ML0520	L025	-
S25R-MCKNR/L12	32	25	16.5	200	43	23	12°	CN..1204..	-	MX0613	MY061910	ML0620	L025,L03	-
S32S-MCKNR/L12	40	32	22.5	250	54	30	17°	CN..1204..	MC1204	MX0617	MY0619	MY0625	L025,L03	-
S40T-MCKNR/L12	50	40	26	300	68	37	15°	CN..1204..	MC1204	MX0617	MY0619	MY0625	L025,L03	-
S50U-MCKNR/L12	60	50	33	350	85	47	12°	CN..1204..	MC1204	MX0617	MY0619	MY0625	L025,L03	-
S60V-MCKNR/L12	70	60	36	400	102	56	10°	CN..1204..	MC1204	MX0617	MY0619	MY0625	L025,L03	-
S50U-MCKNR/L19	60	50	32.5	350	85	47	12°	CN..1906..	MC1904	MX1022	MY0823	ML0828	L04	-
H20Q-MCKNR/L12	26	20	14	180	34	18	15°	CN..1204..	-	MX0613	MY0515	ML0520	L025	-
H25R-MCKNR/L12	32	25	16.5	200	43	23	12°	CN..1204..	-	MX0613	MY061910	ML0620	L025,L03	-
A20Q-MCKNR/L12	26	20	14	180	34	18	15°	CN..1204..	-	MX0613	MY0515	ML0520	L025	√
A25R-MCKNR/L12	32	25	16.5	200	43	23	12°	CN..1204..	-	MX0613	MY061910	ML0620	L025,L03	√
A32S-MCKNR/L12	40	32	22.5	250	54	30	17°	CN..1204..	MC1204	MX0617	MY0619	MY0625	L025,L03	√
A40T-MCKNR/L12	50	40	26	300	68	37	15°	CN..1204..	MC1204	MX0617	MY0619	MY0625	L025,L03	√
A50U-MCKNR/L19	60	50	32.5	350	85	47	12°	CN..1906..	MC1904	MX1022	MY0823	ML0828	L04	√

適用 Suitable:德克刀片 DEREK Insert

Type M

MCLNR/L





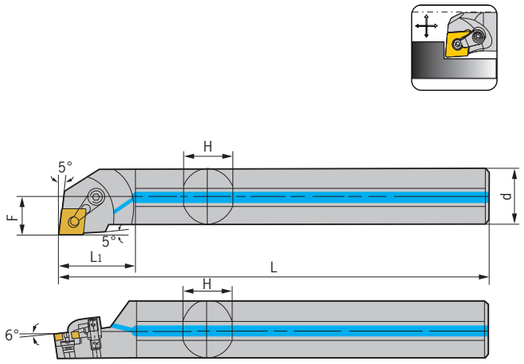

型號 Specification	最小加工徑 Min dia	d	F	L	L1	H	a	刀片 Insert	刀墊 Shim	中心螺絲 Center screw	壓板 Clamp	壓板螺絲 Clamp screw	扳手 Wrench	出水孔 Water hole
S20Q-MCLNR/L12	25	20	13	180	34	18	15°	CN..1204..	-	MX0613	MY0515	ML0520	L025	-
S25R-MCLNR/L12	32	25	16.5	200	43	23	12°	CN..1204..	-	MX0613	MY0619	ML0620	L025,L03	-
S32S-MCLNR/L12	40	32	22.5	250	54	30	17°	CN..1204..	MC1204	MX0617	MY0619	ML0625	L025,L03	-
S40T-MCLNR/L12	50	40	26	300	68	37	15°	CN..1204..	MC1204	MX0617	MY0619	ML0625	L025,L03	-
S45U-MCLNR/L12	55	45	29.5	350	77	42	15°	CN..1204..	MC1204	MX0617	MY0619	ML0625	L025,L03	-
S50U-MCLNR/L12	60	50	31	350	85	47	12°	CN..1204..	MC1204	MX0617	MY0619	ML0625	L025,L03	-
S60V-MCLNR/L12	70	60	36	400	102	56	10°	CN..1204..	MC1204	MX0617	MY0619	ML0625	L025,L03	-
S50U-MCLNR/L19	60	50	31	350	85	47	12°	CN..1906..	MC1904	MX1022	MY0823	ML0828	L04	-
H20Q-MCLNR/L12	25	20	13	180	34	18	15°	CN..1204..	-	MX0613	MY0515	ML0520	L025	-
H25R-MCLNR/L12	32	25	16.5	200	43	23	12°	CN..1204..	-	MX0613	MY0619	ML0620	L025,L03	-
H32S-MCLNR/L12	40	32	22.5	250	54	30	17°	CN..1204..	MC1204	MX0617	MY0619	ML0625	L025,L03	-
A20Q-MCLNR/L12	25	20	13	180	34	18	15°	CN..1204..	-	MX0613	MY0515	ML0520	L025	√
A25R-MCLNR/L12	32	25	16.5	200	43	23	12°	CN..1204..	-	MX0613	MY0619	ML0620	L025,L03	√
A32S-MCLNR/L12	40	32	22.5	250	54	30	17°	CN..1204..	MC1204	MX0617	MY0619	ML0625	L025,L03	√
A40T-MCLNR/L12	50	40	26	300	68	37	15°	CN..1204..	MC1204	MX0617	MY0619	ML0625	L025,L03	√
A45U-MCLNR/L12	55	45	29.5	350	77	42	15°	CN..1204..	MC1204	MX0617	MY0619	ML0625	L025,L03	√
A50U-MCLNR/L12	60	50	31	350	85	47	12°	CN..1204..	MC1204	MX0617	MY0619	ML0625	L025,L03	√
A50U-MCLNR/L19	60	50	31	350	85	47	12°	CN..1906..	MC1904	MX1022	MY0823	ML0828	L04	√

適用 Suitable:德克刀片 DEREK Insert

Type M

MCWNR/L

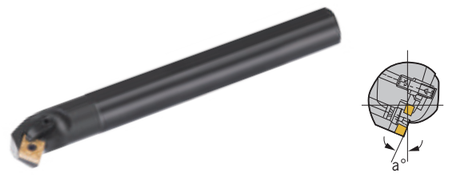



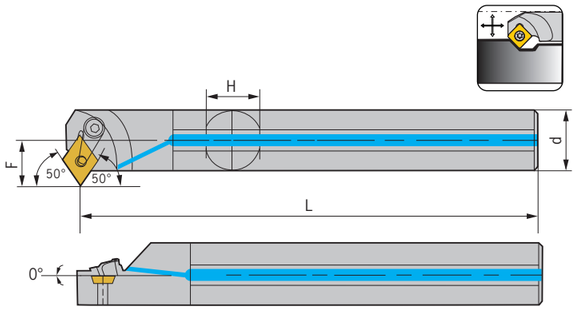

型號 Specification	最小加工徑 Min dia	d	F	L	H	a	刀片 Insert	刀墊 Shim	中心螺絲 Center screw	壓板 Clamp	壓板螺絲 Clamp screw	扳手 Wrench	出水孔 Water hole
S20Q-MCWNR/L12	30	20	17.0	180	18	15°	CN..1204..	-	MX0613	MY0515	ML0516	L025	-
S25R-MCWNR/L12	35	25	19.5	200	23	12°	CN..1204..	-	MX0613	MY0619	ML0620	L025,L03	-
S32S-MCWNR/L12	42	32	23.0	250	30	17°	CN..1204..	MC1204	MX0617	MY0619	ML0625	L025,L03	-
S40T-MCWNR/L12	50	40	27.0	300	37	15°	CN..1204..	MC1204	MX0617	MY0619	ML0625	L025,L03	-
H16N-MCWNR/L12	26	16	15.0	160	15	17°	CN..1204..	-	MX0613	MY0515	ML0520	L025	-
H20Q-MCWNR/L12	30	20	17.0	180	18	15°	CN..1204..	-	MX0613	MY0515	ML0520	L025	-
H25R-MCWNR/L12	35	25	19.5	200	23	12°	CN..1204..	-	MX0613	MY0619	ML0620	L025,L03	-
A16N-MCWNR/L12	26	16	15.0	160	15	17°	CN..1204..	-	MX0613	MY0515	ML0516	L025	√
A20Q-MCWNR/L12	30	20	17.0	180	18	15°	CN..1204..	-	MX0613	MY0515	ML0516	L025	√
A25R-MCWNR/L12	35	25	19.5	200	23	12°	CN..1204..	-	MX0613	MY0619	ML0620	L025,L03	√
A32S-MCWNR/L12	42	32	23.0	250	30	17°	CN..1204..	MX1204	MX0617	MY0619	ML0625	L025,L03	√
A40T-MCWNR/L12	50	40	27.0	300	37	15°	CN..1204..	MX1204	MX0617	MY0619	ML0625	L025,L03	√

適用 Suitable:德克刀片 DEREK Insert

MDQNR/L





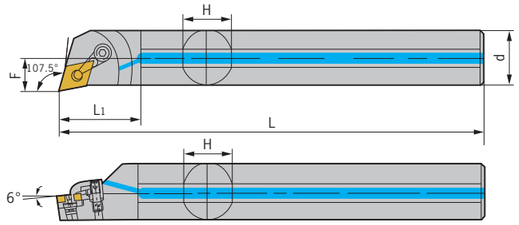

型號 Specification	最小加工徑 Min dia	d	F	L	L1	H	a	刀片 Insert	刀墊 Shim	中心螺絲 Center screw	壓板 Clamp	壓板螺絲 Clamp screw	扳手 Wrench	出水孔 Water hole
S25R-MDQNR/L15	32	25	17	200	43	23	12°	DN..1504..	-	MX0613	MY0621	ML0625	L025,L03	-
S32S-MDQNR/L15	42	32	22.5	250	54	30	17°	DN..1504..	MD1504	MX0617	MY0621	ML0625	L025,L03	-
S40T-MDQNR/L15	50	40	26	300	68	37	15°	DN..1504..	MD1504	MX0617	MY0621	ML0625	L025,L03	-
S50U-MDQNR/L15	63	50	33	350	85	47	12°	DN..1504..	MD1504	MX0617	MY0621	ML0625	L025,L03	-
H25R-MDQNR/L15	32	25	17	200	43	23	12°	DN..1504..	-	MX0613	MY0621	ML0625	L025,L03	-
H32S-MDQNR/L15	42	32	22.5	250	54	30	17°	DN..1504..	MD1504	MX0617	MY0621	ML0625	L025,L03	-
A25R-MDQNR/L15	32	25	17	200	43	23	12°	DN..1504..	-	MX0613	MY0621	ML0625	L025,L03	√
A32S-MDQNR/L15	42	32	22.5	250	54	30	17°	DN..1504..	MD1504	MX0617	MY0621	ML0625	L025,L03	√
A40T-MDQNR/L15	50	40	26	300	68	37	15°	DN..1504..	MD1504	MX0617	MY0621	ML0625	L025,L03	√

適用 Suitable:德克刀片 DEREK Insert

Type M

MDUNR/L



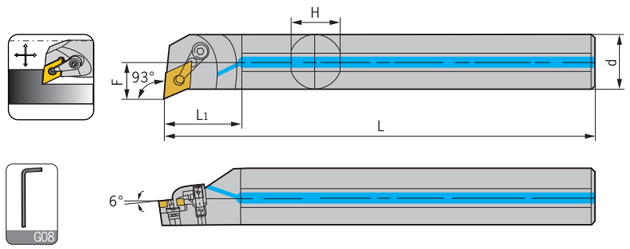



型號 Specification	最小加工徑 Min dia	d	F	L	L1	H	a	刀片 Insert	刀墊 Shim	中心螺絲 Center screw	壓板 Clamp	壓板螺絲 Clamp screw	扳手 Wrench	出水孔 Water hole
S25R-MDUNR/L15	32	25	16	200	43	23	12°	DN..1504..	-	MX0613	MY0621	ML0620	L025,L03	-
S32S-MDUNR/L15	40	32	21	250	54	30	17°	DN..1504..	MD1504	MX0617	MY0621	ML0625	L025,L03	-
S40T-MDUNR/L15	50	40	26	300	68	37	15°	DN..1504..	MD1504	MX0617	MY0621	ML0625	L025,L03	-
S50U-MDUNR/L15	60	50	32	350	85	47	12°	DN..1504..	MD1504	MX0617	MY0621	ML0625	L025,L03	-
H25R-MDUNR/L15	32	25	16	200	43	23	12°	DN..1504..	-	MX0613	MY0621	ML0620	L025,L03	-
H32S-MDUNR/L15	40	32	21	250	54	30	17°	DN..1504..	MD1504	MX0617	MY0621	ML0625	L025,L03	-
A25R-MDUNR/L15	32	25	16	200	43	23	12°	DN..1504..	-	MX0613	MY0621	ML0620	L025,L03	√
A32S-MDUNR/L15	40	32	21	250	54	30	17°	DN..1504..	MD1504	MX0617	MY0621	ML0625	L025,L03	√

適用 Suitable:德克刀片 DEREK Insert

MDZNR/L



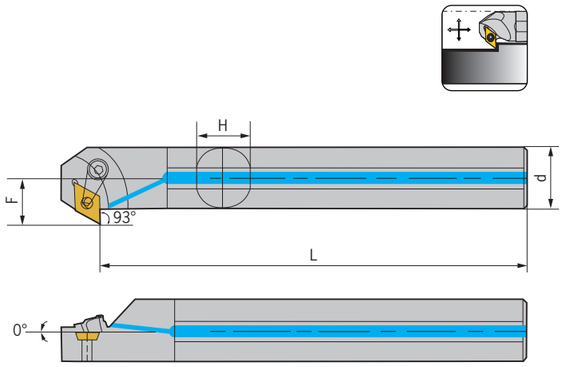



型號 Specification	最小加工徑 Min dia	d	F	L	H	a	刀片 Insert	刀墊 Shim	中心螺絲 Center screw	壓板 Clamp	壓板螺絲 Clamp screw	扳手 Wrench	出水孔 Water hole
S20Q-MDZNR/L11	25	20	13	180	18	15°	DN..1104..	-	MX0510	MY0619	ML0620	L02,L03	-
S25R-MDZNR/L11	32	25	17	200	23	12°	DN..1104..	-	MX0510	MY0619	ML0620	L02,L03	-
S25R-MDZNR/L15	32	25	17	200	23	12°	DN..1504..	MX1504	MX0613	MY0619	ML0620	L025,L03	-
S32S-MDZNR/L15	40	32	22	250	30	17°	DN..1504..	MX1504	MX0617	MY0621	ML0625	L025,L03	-
S40T-MDZNR/L15	50	40	27	300	37	15°	DN..1504..	MX1504	MX0617	MY0621	ML0625	L025,L03	-
S50U-MDZNR/L15	60	50	35	350	47	12°	DN..1504..	MX1504	MX0617	MY0621	ML0625	L025,L03	-
H32S-MDZNR/L15	40	32	22	250	30	17°	DN..1504..	MX1504	MX0617	MY0621	ML0625	L025,L03	-
A25R-MDZNR/L15	32	25	17	200	23	12°	DN..1504..	-	MX0613	MY0619	ML0620	L025,L03	√
A32S-MDZNR/L15	40	32	22	250	30	17°	DN..1504..	MX1504	MX0617	MY0621	ML0625	L025,L03	√

適用 Suitable:德克刀片 DEREK Insert

Type M

MDWNR/L



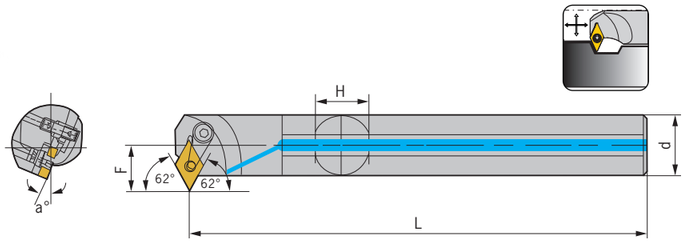

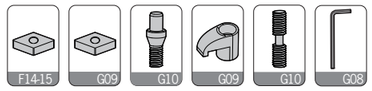

型號 Specification	最小加工徑 Min dia	d	F	L	H	a	刀片 Insert	刀墊 Shim	中心螺絲 Center screw	壓板 Clamp	壓板螺絲 Clamp screw	扳手 Wrench	出水孔 Water hole
S25R-MDWNR/L15	28	25	24.5	200	23	12°	DN..1504..	-	MX0613	MY0621	ML0620	L025,L03	-
S32S-MDWNR/L15	45	32	28.0	250	30	15°	DN..1506..	MD1504	MX0619	MY0621	ML0625	L025,L03	-
S40T-MDWNR/L15	53	40	32.0	300	37	13°	DN..1506..	MD1504	MX0619	MY0621	ML0625	L025,L03	-
S50U-MDWNR/L15	63	50	36.0	350	47	13°	DN..1506..	MD1504	MX0619	MY0621	ML0625	L025,L03	-
A25R-MDWNR/L15	38	25	24.5	200	23	12°	DN..1504..	-	MX0613	MY0621	ML0620	L025,L03	√
A32R-MDWNR/L15	45	32	28.0	250	30	15°	DN..1506..	MD1504	MX0619	MY0621	ML0625	L025,L03	√

適用 Suitable:德克刀片 DEREK Insert

MDLNR/L



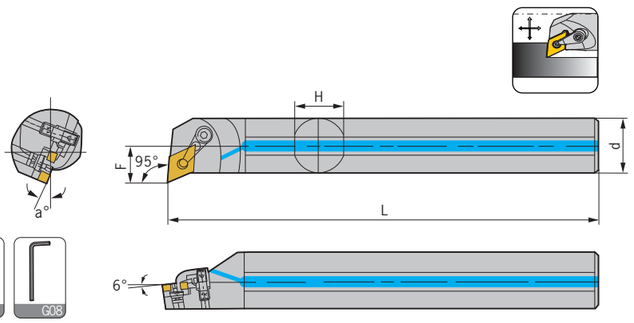

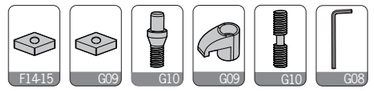

型號 Specification	最小加工徑 Min dia	d	F	L	H	a	刀片 Insert	刀墊 Shim	中心螺絲 Center screw	壓板 Clamp	壓板螺絲 Clamp screw	扳手 Wrench	出水孔 Water hole
S20Q-MDLNR/L11	25	20	12	180	18	15°	DN..1104..	-	MX0510	MY0515	ML0520	L02,L025	-
S25R-MDLNR/L11	32	25	16	200	23	12°	DN..1104..	-	MX0510	MY0619	ML0620	L02,L03	-
S32S-MDLNR/L15	40	32	21	250	30	17°	DN..1504..	MD1504	MX0617	MY0621	ML0625	L02,L03	-
S40T-MDLNR/L15	50	40	26	300	37	15°	DN..1504..	MD1504	MX0617	MY0621	ML0625	L02,L03	-
S50U-MDLNR/L15	60	50	32	350	47	12°	DN..1504..	MD1504	MX0617	MY0621	ML0625	L02,L03	-
H25R-MDLNR/L15	32	25	16	200	23	12°	DN..1504..	-	MX0613	MY0621	ML0625	L02,L03	-
H32S-MDLNR/L15	40	32	21	250	30	17°	DN..1504..	MD1504	MX0617	MY0621	ML0625	L02,L03	-
A25R-MDLNR/L15	32	25	16	200	23	12°	DN..1504..	-	MX0613	MY0621	ML0620	L02,L03	√
A32S-MDLNR/L15	40	32	21	250	30	17°	DN..1504..	MD1504	MX0617	MY0621	ML0625	L02,L03	√

適用 Suitable:德克刀片 DEREK Insert

Type M

MSKNR/L

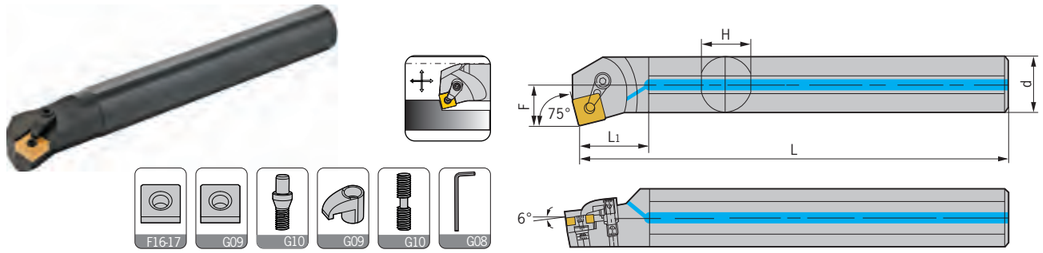

型號 Specification	最小加工径 Min dia	d	F	L	L1	H	a	刀片 Insert	刀墊 Shim	中心螺絲 Center screw	壓板 Clamp	壓板螺絲 Clamp screw	扳手 Wrench	出水孔 Water hole
S20Q-MSKNR/L12	25	20	13	180	34	18	15°	SN..1204..	-	MX0611	MY0515	ML0516	L025	-
S25R-MSKNR/L12	32	25	17	200	43	23	12°	SN..1204..	-	MX0613	MY0619	ML0620	L025,L03	-
S32S-MSKNR/L12	40	32	22	250	54	30	17°	SN..1204..	MS1204	MX0617	MY0619	ML0625	L025,L03	-
S40T-MSKNR/L12	50	40	27	300	68	37	15°	SN..1204..	MS1204	MX0617	MY0619	ML0625	L025,L03	-
S45U-MSKNR/L12	55	45	30	350	77	42	15°	SN..1204..	MS1204	MX0617	MY0619	ML0625	L025,L03	-
S50U-MSKNR/L12	63	50	34	350	85	47	12°	SN..1204..	MS1204	MX0617	MY0619	ML0625	L025,L03	-
H20Q-MSKNR/L12	25	20	13	180	34	18	15°	SN..1204..	-	MX0611	MY0515	ML0516	L025	-
H25R-MSKNR/L12	32	25	17	200	43	23	12°	SN..1204..	-	MX0613	MY0619	ML0620	L025,L03	-
A20Q-MSKNR/L12	25	20	13	180	34	18	15°	SN..1204..	-	MX0611	MY0515	ML0516	L025	√
A25R-MSKNR/L12	32	25	17	200	43	23	12°	SN..1204..	-	MX0613	MY0619	ML0620	L025,L03	√
A32S-MSKNR/L12	40	32	22	250	54	30	17°	SN..1204..	MS1204	MX0617	MY0619	ML0625	L025,L03	√

適用 Suitable:德克刀片 DEREK Insert

MSSNR/L

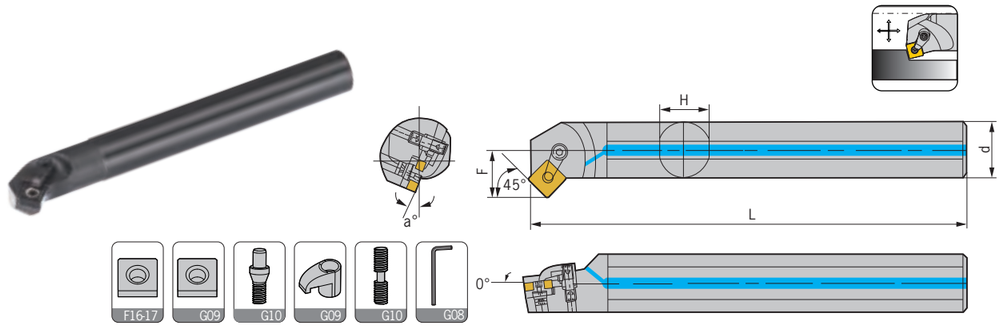

型號 Specification	最小加工径 Min dia	d	F	L	H	a	刀片 Insert	刀墊 Shim	中心螺絲 Center screw	壓板 Clamp	壓板螺絲 Clamp screw	扳手 Wrench	出水孔 Water hole
S20Q-MSSNR/L12	30	20	17.0	180	18	15°	SN..1204..	-	MX0613	MY0515	ML0520	L02,L03	-
S25R-MSSNR/L12	35	25	19.5	200	23	12°	SN..1204..	-	MX0613	MY0619	ML0620	L02,L03	-
S32S-MSSNR/L12	42	32	23.0	250	30	17°	SN..1204..	MC1204	MX0617	MY0619	ML0625	L02,L03	-
A20Q-MSSNR/L12	30	20	17.0	180	18	15°	SN..1204..	-	MX0611	MY0515-A	ML0516	L025	√
A25R-MSSNR/L12	35	25	19.5	200	23	12°	SN..1204..	-	MX0613	MY0619	ML0620	L02,L03	√

適用 Suitable:德克刀片 DEREK Insert

Type M

MTFNR/L

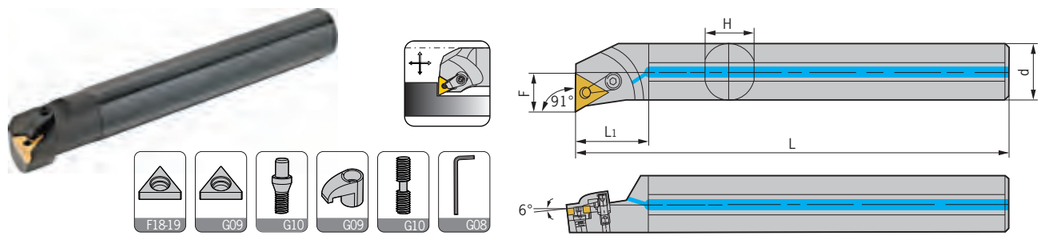

型號 Specification	最小加工径 Min dia	d	F	L	L1	H	a	刀片 Insert	刀墊 Shim	中心螺絲 Center screw	壓板 Clamp	壓板螺絲 Clamp screw	扳手 Wrench	出水孔 Water hole
S20Q-MTFNR/L16	25	20	13	180	34	18	15°	TN..1604..	-	MX0510	MY0515	ML0520	L02,L025	-
S25R-MTFNR/L16	32	25	16.5	200	43	23	12°	TN..1604..	-	MX0510	MY0619	ML0620	L02,L03	-
S32S-MTFNR/L16	41	32	22.5	250	54	30	17°	TN..1604..	MT1603	MX0513	MY0619	ML0625	L02,L03	-
S40T-MTFNR/L16	50	40	26.5	300	68	37	15°	TN..1604..	MT1603	MX0513	MY0619	ML0625	L02,L03	-
S50U-MTFNR/L16	60	50	31	350	85	47	12°	TN..1604..	MT1603	MX0513	MY0619	ML0625	L02,L03	-
S40T-MTFNR/L22	50	40	26	300	68	37	15°	TN..2204..	MT2204	MX0617	MY0819	ML0828	L025,L04	-
S50U-MTFNR/L22	60	50	31	350	85	47	12°	TN..2204..	MT2204	MX0617	MY0819	ML0828	L025,L04	-
H20Q-MTFNR/L16	25	20	13	180	34	18	15°	TN..1604..	-	MX0510	MY0515	ML0520	L02,L025	-
H25R-MTFNR/L16	32	25	16.5	200	43	23	12°	TN..1604..	-	MX0510	MY0619	ML0620	L02,L03	-
H32S-MTFNR/L16	41	32	22.5	250	54	30	17°	TN..1604..	MT1603	MX0513	MY0619	ML0625	L02,L03	-
A20Q-MTFNR/L16	25	20	13	180	34	18	15°	TN..1604..	-	MX0510	MY0515	ML0516	L02,L025	√
A25R-MTFNR/L16	32	25	16.5	200	43	23	12°	TN..1604..	-	MX0510	MY0619	ML0620	L02,L03	√
A32S-MTFNR/L16	41	32	22.5	250	54	30	17°	TN..1604..	MT1603	MX0513	MY0619	ML0625	L02,L03	√

適用 Suitable:德克刀片 DEREK Insert

MTQNR/L

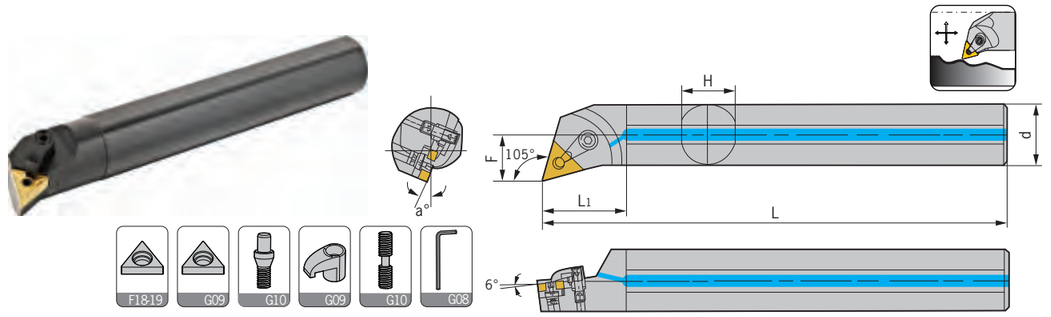

型號 Specification	最小加工径 Min dia	d	F	L	L1	H	a	刀片 Insert	刀墊 Shim	中心螺絲 Center screw	壓板 Clamp	壓板螺絲 Clamp screw	扳手 Wrench	出水孔 Water hole
S20Q-MTQNR/L16	25	20	12.5	180	34	18	15°	TN..1604..	-	MX0510	MY0515	ML0520	L02,L025	-
S25R-MTQNR/L16	32	25	16	200	43	23	12°	TN..1604..	-	MX0510	MY0619	ML0620	L02,L03	-
S32S-MTQNR/L16	41	32	22.5	250	54	30	17°	TN..1604..	MT1603	MX0513	MY0619	ML0625	L02,L03	-
S40T-MTQNR/L16	50	40	26.5	300	68	37	15°	TN..1604..	MT1603	MX0513	MY0619	ML0625	L02,L03	-
S50U-MTQNR/L16	60	50	31	350	85	47	12°	TN..1604..	MT1603	MX0513	MY0619	ML0625	L02,L03	-
H20Q-MTQNR/L16	25	20	12.5	180	34	18	15°	TN..1604..	-	MX0510	MY0515	ML0520	L02,L025	-
H25R-MTQNR/L16	32	25	16	200	43	23	12°	TN..1604..	-	MX0510	MY0619	ML0620	L02,L03	-
H32S-MTQNR/L16	41	32	22.5	250	54	30	17°	TN..1604..	MT1603	MX0513	MY0619	ML0625	L02,L03	-
A20Q-MTQNR/L16	25	20	12.5	180	34	18	15°	TN..1604..	-	MX0510	MY0515	ML0520	L02,L025	√
A25R-MTQNR/L16	32	25	16	200	43	23	12°	TN..1604..	-	MX0510	MY0619	ML0620	L02,L03	√
A32S-MTQNR/L16	41	32	22.5	250	54	30	17°	TN..1604..	MT1603	MX0513	MY0619	ML0625	L02,L03	√
A40T-MTQNR/L16	50	40	26.5	300	68	37	15°	TN..1604..	MT1603	MX0513	MY0619	ML0625	L02,L03	√

適用 Suitable:德克刀片 DEREK Insert

Type M

MTUNR/L

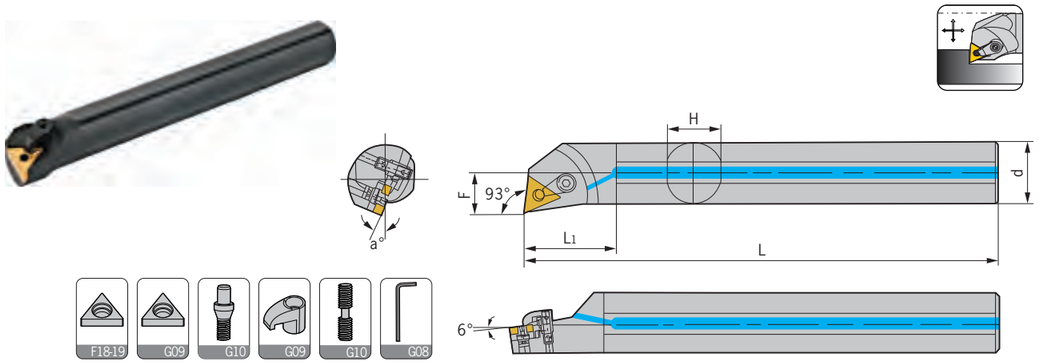

型號 Specification	最小加工径 Min dia	d	F	L	L1	H	a	刀片 Insert	刀墊 Shim	中心螺絲 Center screw	壓板 Clamp	壓板螺絲 Clamp screw	扳手 Wrench	出水孔 Water hole
S20Q-MTUNR/L16	25	20	12.5	180	34	18	15°	TN..1604..	-	MX0510	MY0515	ML0520	L02,L025	-
S25R-MTUNR/L16	32	25	16	200	43	23	12°	TN..1604..	-	MX0510	MY0619	ML0620	L02,L03	-
S32S-MTUNR/L16	41	32	22.5	250	54	30	17°	TN..1604..	MT1603	MX0513	MY0619	ML0625	L02,L03	-
S40T-MTUNR/L16	50	40	26.5	300	68	37	15°	TN..1604..	MT1603	MX0513	MY0619	ML0625	L02,L03	-
S45U-MTUNR/L16	55	45	30	350	77	42	15°	TN..1604..	MT1603	MX0513	MY0619	ML0625	L02,L03	-
S50U-MTUNR/L16	60	50	31	350	85	47	12°	TN..1604..	MT1603	MX0513	MY0619	ML0625	L02,L03	-
S60V-MTUNR/L16	70	60	36	400	102	56	10°	TN..1604..	MT1603	MX0513	MY0619	ML0625	L02,L03	-
S40T-MTUNR/L22	50	40	26.5	300	68	37	15°	TN..2204..	MT2204	MX0617	MY0819	ML0828	L025,L04	-
S50U-MTUNR/L22	60	50	31	350	85	47	12°	TN..2204..	MT2204	MX0617	MY0819	ML0828	L025,L04	-
H20Q-MTUNR/L16	25	20	12.5	180	34	18	15°	TN..1604..	-	MX0510	MY0515	ML0520	L02,L025	-
H25R-MTUNR/L16	32	25	16	200	43	23	12°	TN..1604..	-	MX0510	MY0619	ML0620	L02,L03	-
H32S-MTUNR/L16	41	32	22.5	250	54	30	17°	TN..1604..	MT1603	MX0513	MY0619	ML0625	L02,L03	-
A20Q-MTUNR/L16	25	20	12.5	180	34	18	15°	TN..1604..	-	MX0510	MY0515	ML0520	L02,L025	√
A25R-MTUNR/L16	32	25	16	200	43	23	12°	TN..1604..	-	MX0510	MY0619	ML0620	L02,L03	√
A32S-MTUNR/L16	41	32	22.5	250	54	30	17°	TN..1604..	MT1603	MX0513	MY0619	ML0625	L02,L03	√

適用 Suitable:德克刀片 DEREK Insert

Type M

MTJNR/L

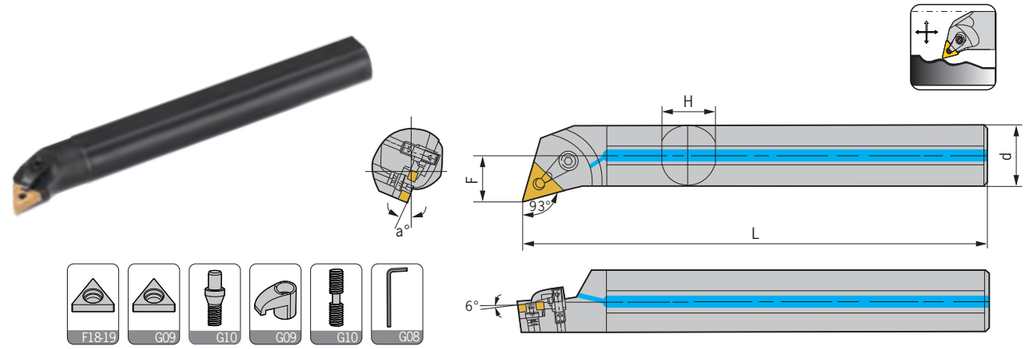

型號 Specification	最小加工径 Min dia	d	F	L	H	a	刀片 Insert	刀墊 Shim	中心螺絲 Center screw	壓板 Clamp	壓板螺絲 Clamp screw	扳手 Wrench	出水孔 Water hole
S20Q-MTJNR/L16	25	20	12.5	180	18	15°	TN..1604..	-	MX0510	MY0515-A	ML0520	L02,L03	-
S25R-MTJNR/L16	32	25	16.5	200	23	12°	TN..1604..	-	MX0510	MY0619	ML0620	L02,L03	-
S40T-MTJNR/L22	50	40	26.5	300	37	15°	TN..2204..	MX2204	MX0617	MY0819	ML0828	L025,L04	-
S50U-MTJNR/L22	60	50	31.0	350	47	12°	TN..2204..	MX2204	MX0617	MY0819	ML0828	L25,L04	-
A20Q-MTJNR/L16	25	20	12.5	180	18	15°	TN..1604..	-	MX0510	MY0515	ML0520	L02,L03	√
A25R-MTJNR/L16	32	25	16.5	200	23	12°	TN..1604..	-	MX0510	MY0619	ML0620	L02,L03	√

適用 Suitable:德克刀片 DEREK Insert

MTWNR/L

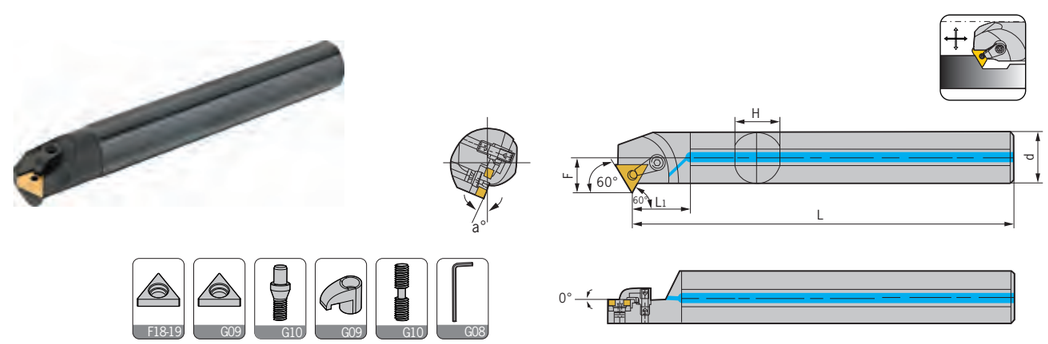

型號 Specification	最小加工径 Min dia	d	F	L	L1	H	a	刀片 Insert	刀墊 Shim	中心螺絲 Center screw	壓板 Clamp	壓板螺絲 Clamp screw	扳手 Wrench	出水孔 Water hole
S20Q-MTWNR/L16	27	20	14	180	34	18	15°	TN..1604..	-	MX0510	MY0619	ML0620	L02,L03	-
S25R-MTWNR/L16	32	25	16.5	200	43	23	12°	TN..1604..	-	MX0510	MY0619	ML0620	L02,L03	-
S32S-MTWNR/L16	39	32	20	250	54	30	17°	TN..1604..	MT1603	MX0513	MY0619	ML0625	L02,L03	-
S40T-MTWNR/L16	50	40	24	300	68	37	15°	TN..1604..	MT1603	MX0513	MY0619	ML0625	L02,L03	-
S50U-MTWNR/L16	57	50	29	350	85	47	12°	TN..1604..	MT1603	MX0513	MY0619	ML0625	L02,L03	-
H20Q-MTWNR/L16	27	20	14	180	34	18	15°	TN..1604..	-	MX0510	MY0515	ML0520	L02,L025	-
H25R-MTWNR/L16	32	25	16.5	200	43	23	12°	TN..1604..	-	MX0510	MY0619	ML0620	L02,L03	-
A20Q-MTWNR/L16	27	20	14	180	34	18	15°	TN..1604..	-	MX0510	MY0619	ML0620	L02,L03	√
A25R-MTWNR/L16	32	25	16.5	200	43	23	12°	TN..1604..	-	MX0510	MY0619	ML0620	L02,L03	√

適用 Suitable:德克刀片 DEREK Insert

Type M

MVQNR/L



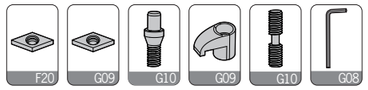

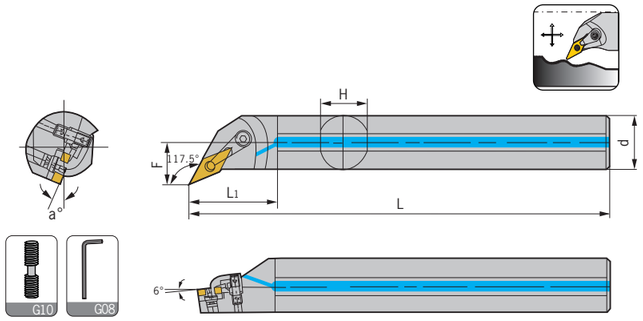

型號 Specification	最小加工径 Min dia	d	F	L	L1	H	a	刀片 Insert	刀墊 Shim	中心螺絲 Center screw	壓板 Clamp	壓板螺絲 Clamp screw	扳手 Wrench	出水孔 Water hole
S25R-MVQNR/L16	32	25	17	200	43	23	12°	VN..1604..	-	MX0513	MY0621	ML0625	L02,L03	-
S32S-MVQNR/L16	42	32	23	250	54	30	17°	VN..1604..	MV1603	MX0513	MY0621	ML0625	L02,L03	-
S40T-MVQNR/L16	50	40	27	300	68	37	15°	VN..1604..	MV1603	MX0513	MY0621	ML0625	L02,L03	-
S50U-MVQNR/L16	63	50	33	350	85	47	12°	VN..1604..	MV1603	MX0513	MY0621	ML0625	L02,L03	-
H25R-MVQNR/L16	32	25	17	200	43	23	12°	VN..1604..	-	MX0510	MY0621	ML0625	L02,L03	-
A20Q-MVQNR/L16	25	20	13	180	34	18	15°	VN..1604..	-	MX0510	MY0515A	ML0516	L02,L025	√
A25R-MVQNR/L16	32	25	17	200	43	23	12°	VN..1604..	-	MX0510	MY0621	ML0625	L02,L03	√

適用 Suitable:德克刀片 DEREK Insert

MVUNR/L





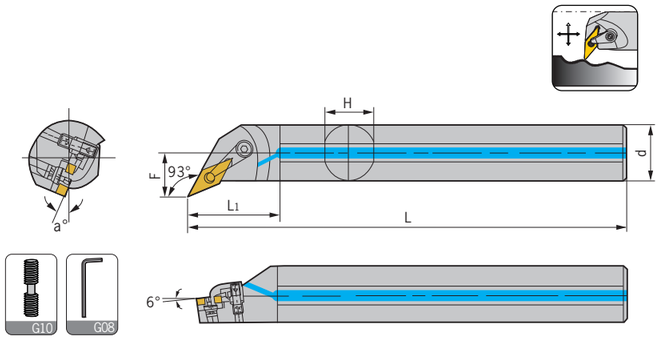

型號 Specification	最小加工径 Min dia	d	F	L	L1	H	a	刀片 Insert	刀墊 Shim	中心螺絲 Center screw	壓板 Clamp	壓板螺絲 Clamp screw	扳手 Wrench	出水孔 Water hole
S25R-MVUNR/L16	32	25	17	200	43	23	12°	VN..1604..	-	MX0510	MY0621	ML0625	L02,L03	-
S32S-MVUNR/L16	42	32	23	250	54	30	17°	VN..1604..	MV1603	MX0513	MY0621	ML0625	L02,L03	-
S40T-MVUNR/L16	50	40	27	300	68	37	15°	VN..1604..	MV1603	MX0513	MY0621	ML0625	L02,L03	-
S50U-MVUNR/L16	63	50	33	350	85	47	12°	VN..1604..	MV1603	MX0513	MY0621	ML0625	L02,L03	-
H25R-MVUNR/L16	32	25	17	200	43	23	12°	VN..1604..	-	MX0510	MY0621	ML0625	L02,L03	-
H32S-MVUNR/L16	42	32	23	250	54	30	17°	VN..1604..	MV1603	MX0513	MY0621	ML0625	L02,L03	-
A25R-MVUNR/L16	32	25	17	200	43	23	12°	VN..1604..	-	MX0510	MY0621	ML0625	L02,L03	√
A32S-MVUNR/L16	42	32	23	250	54	30	17°	VN..1604..	MV1603	MX0513	MY0621	ML0625	L02,L03	√

適用 Suitable:德克刀片 DEREK Insert

Type M

MVWNR/L



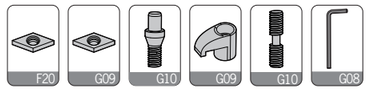

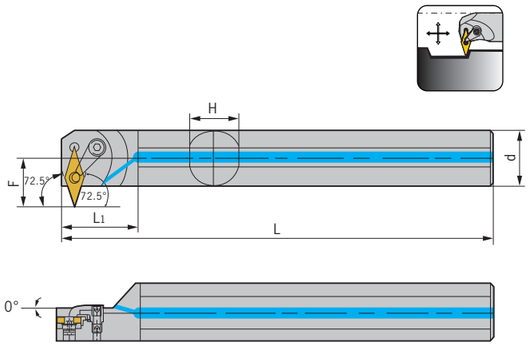

型號 Specification	最小加工径 Min dia	d	F	L	L1	H	a	刀片 Insert	刀墊 Shim	中心螺絲 Center screw	壓板 Clamp	壓板螺絲 Clamp screw	扳手 Wrench	出水孔 Water hole
S25R-MVWNR/L16	40	25	26	200	43	23	12°	VN..1604..	MV1603	MX0513	MY0621	ML0625	L02,L03	-
S32S-MVWNR/L16	48	32	30	250	54	30	17°	VN..1604..	MV1603	MX0513	MY0621	ML0625	L02,L03	-
H25R-MVWNR/L16	40	25	26	200	43	23	12°	VN..1604..	MV1603	MX0513	MY0621	ML0625	L02,L03	-

適用 Suitable:德克刀片 DEREK Insert

MVXNR/L



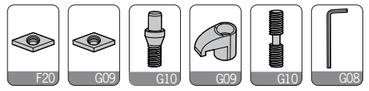

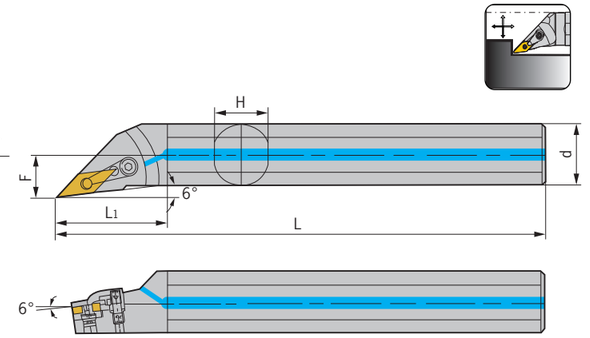

型號 Specification	最小加工径 Min dia	d	F	L	L1	H	a	刀片 Insert	刀墊 Shim	中心螺絲 Center screw	壓板 Clamp	壓板螺絲 Clamp screw	扳手 Wrench	出水孔 Water hole
S20Q-MVXNR/L16-G6	27	20	14	180	34	18	15°	VN..1604..	-	MX0510	MY0621	ML0620	L02,L03	-
S25R-MVXNR/L16-G6	32	25	17	200	43	23	12°	VN..1604..	-	MX0510	MY0621	ML0625	L02,L03	-
S32S-MVXNR/L16-G6	42	32	23	250	54	30	17°	VN..1604..	MV1603	MX0513	MY0621	ML0625	L02,L03	-
S40T-MVXNR/L16-G6	50	40	27	300	68	37	15°	VN..1604..	MV1603	MX0513	MY0621	ML0625	L02,L03	-
S50U-MVXNR/L16-G6	61	50	31	350	85	47	12°	VN..1604..	MV1603	MX0513	MY0621	ML0625	L02,L03	-
H20Q-MVXNR/L16-G6	27	20	14	180	34	18	15°	VN..1604..	-	MX0510	MY0621	ML0625	L02,L03	-
H25R-MVXNR/L16-G6	32	25	17	200	43	23	12°	VN..1604..	-	MX0510	MY0621	ML0625	L02,L03	-
A20Q-MVXNR/L16-G6	27	20	14	180	34	18	15°	VN..1604..	-	MX0510	MY0621	ML0620	L02,L03	√
A25R-MVXNR/L16-G6	32	25	17	200	43	23	12°	VN..1604..	-	MX0510	MY0621	ML0625	L02,L03	√

適用 Suitable:德克刀片 DEREK Insert

Type M

MWLNR/L

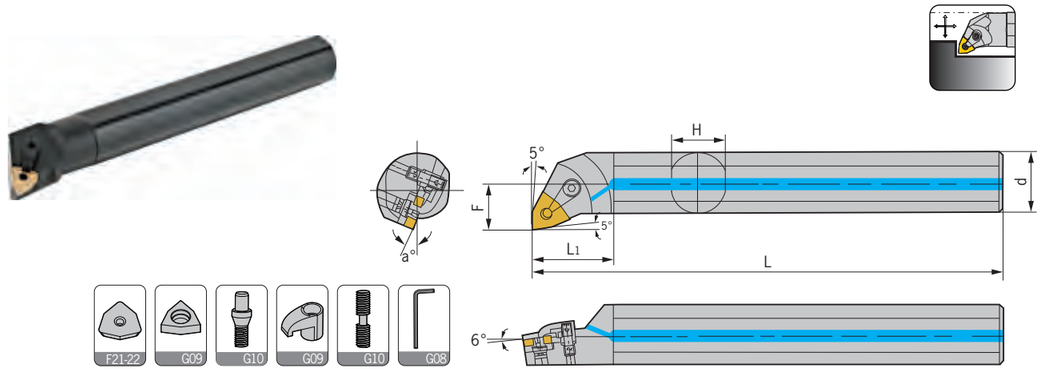

型號 Specification	最小加工径 Min dia	d	F	L	L1	H	a	刀片 Insert	刀墊 Shim	中心螺絲 Center screw	壓板 Clamp	壓板螺絲 Clamp screw	扳手 Wrench	出水孔 Water hole
S20Q-MWLNR/L06	25	20	13	180	34	18	15°	WN..0604..	-	MX0510	MY0515	ML0520	L025,L02	-
S25R-MWLNR/L06	32	25	16.5	200	43	23	12°	WN..0604..	-	MX0510	MY0515	ML0520	L025,L02	-
S20Q-MWLNR/L08	25	20	13	180	34	18	15°	WN..0804..	-	MX0613	MY0515	ML0618	L025	-
S25R-MWLNR/L08	32	25	16.5	200	43	23	12°	WN..0804..	-	MX0613	MY0619	ML0620	L025,L03	-
S32S-MWLNR/L08	41	32	22	250	54	30	17°	WN..0804..	MW0804	MX0617	MY0619	ML0625	L025,L03	-
S40T-MWLNR/L08	50	40	26	300	68	37	15°	WN..0804..	MW0804	MX0617	MY0619	ML0625	L025,L03	-
S50U-MWLNR/L08	60	50	31	350	85	47	12°	WN..0804..	MW0804	MX0617	MY0619	ML0625	L025,L03	-
H20Q-MWLNR/L06	25	20	13	180	34	18	15°	WN..0604..	-	MX0510	MY0515	ML0520	L02,L025	-
H25R-MWLNR/L06	32	25	16.5	200	43	23	12°	WN..0604..	-	MX0510	MY0515	ML0520	L02,L025	-
H20Q-MWLNR/L08	25	20	13	180	34	18	15°	WN..0804..	-	MX0613	MY0515	ML0520	L025	-
H25R-MWLNR/L08	32	25	16.5	200	43	23	12°	WN..0804..	-	MX0613	MY0619	ML0620	L025,L03	-
H32S-MWLNR/L08	41	32	22	250	54	30	17°	WN..0804..	MW0804	MX0617	MY0619	ML0625	L025,L03	-
A20Q-MWLNR/L06	25	20	13	180	34	18	15°	WN..0604..	-	MX0510	MY0515	ML0520	L025,L02	√
A25R-MWLNR/L06	32	25	16.5	200	43	23	12°	WN..0604..	-	MX0510	MY0515	ML0520	L025,L02	√
A20Q-MWLNR/L08	25	20	13	180	34	18	15°	WN..0804..	-	MX0613	MY0515	ML0520	L025	√
A25R-MWLNR/L08	32	25	16.5	200	43	23	12°	WN..0804..	-	MX0613	MY0619	ML0620	L025,L03	√
A32S-MWLNR/L08	41	32	22	250	54	30	17°	WN..0804..	MW0804	MX0617	MY0619	ML0625	L025,L03	√

適用 Suitable:德克刀片 DEREK Insert

Type S

SCK*R/L

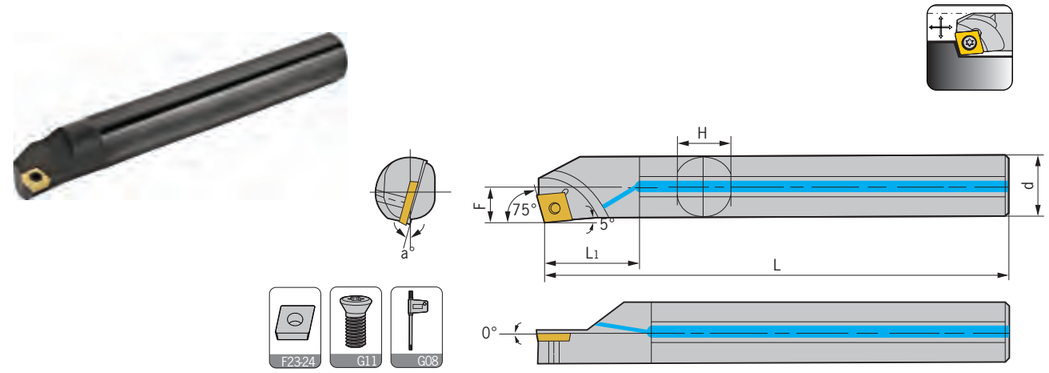

型號 Specification	最小加工径 Min dia	d	F	L	L1	H	a	刀片 Insert	螺絲 Screw	扳手 Wrench	出水孔 Water hole
S08K-SCKCR/L06	10	8	5.5	125	14	7	13°	CC..0602..	M2.5*5	Q08	-
S10K-SCKCR/L06	13	10	6	125	17	9	12°	CC..0602..	M2.5*6	Q08	-
S12M-SCKCR/L06	16	12	7	150	20	11	10°	CC..0602..	M2.5*6	Q08	-
S12M-SCKCR/L09	16	12	8	150	20	11	12°	CC..09T3..	M3.5*8	Q15	-
S16N-SCKCR/L09	20	16	9.5	160	27	15	10°	CC..09T3..	M3.5*8	Q15	-
S20Q-SCKCR/L09	24	20	11.5	180	34	18	8°	CC..09T3..	M3.5*8	Q15	-
S25R-SCKCR/L09	31	25	14	200	43	23	8°	CC..09T3..	M3.5*9	Q15	-
H08K-SCKCR/L06	10	8	5.5	125	16	7	13°	CC..0602..	M2.5*5	Q08	-
H10K-SCKCR/L06	13	10	6	125	20	9	12°	CC..0602..	M2.5*5	Q08	-
H12M-SCKCR/L06	16	12	7	150	24	11	10°	CC..0602..	M2.5*6	Q08	-
H12M-SCKCR/L09	16	12	8	150	24	11	12°	CC..09T3..	M3.5*8	Q15	-
H16N-SCKCR/L09	20	16	9.5	160	32	15	10°	CC..09T3..	M3.5*8	Q15	-
C08K-SCKCR/L06	10	8	5.5	125	14	7	13°	CC..0602..	M2.5*5	Q08	-
C10M-SCKCR/L06	13	10	6	150	17	9	12°	CC..0602..	M2.5*5	Q08	-
C12Q-SCKCR/L06	16	12	7	180	20	11	10°	CC..0602..	M2.5*6	Q08	-
C12Q-SCKCR/L09	16	12	8	180	20	11	12°	CC..09T3..	M3.5*8	Q15	-
C16R-SCKCR/L09	20	16	9.5	200	27	15	10°	CC..09T3..	M3.5*8	Q15	-
C20S-SCKCR/L09	24	20	11.5	250	34	18	8°	CC..09T3..	M3.5*8	Q15	-
S08K-SCKPR/L06	10	8	5.5	125	14	7	10°	CP..0602..	M2.5*5	Q08	-
S10K-SCKPR/L06	13	10	6	125	17	9	8°	CP..0602..	M2.5*5	Q08	-
S12M-SCKPR/L06	16	12	7	150	20	11	6°	CP..0602..	M2.5*6	Q08	-
S10K-SCKPR/L08	13	10	7	125	17	9	10°	CP..0802..	M3*6	Q08	-
S12M-SCKPR/L08	16	12	7.5	150	20	11	8°	CP..0802..	M3*6	Q08	-
S16N-SCKPR/L08	20	16	9.5	160	27	15	6°	CP..0802..	M3*6	Q08	-
S12M-SCKPR/L09	16	12	8	150	20	11	8°	CP..0903..	M3.5*7	Q15	-
S16N-SCKPR/L09	20	16	9.5	160	27	15	6°	CP..0903..	M3.5*8	Q15	-
S20Q-SCKPR/L09	24	20	11.5	180	34	18	4°	CP..0903..	M3.5*8	Q15	-
S25R-SCKPR/L09	31	25	14	200	43	23	4°	CP..0903..	M3.5*8	Q15	-

轉下頁
See next page

Type S

SCK*R/L

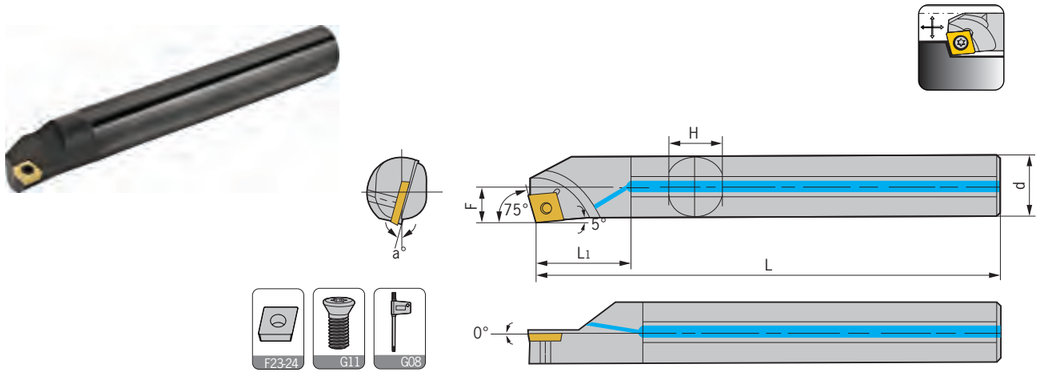

型號 Specification	最小加工径 Min dia	d	F	L	L1	H	a	刀片 Insert	螺絲 Screw	扳手 Wrench	出水孔 Water hole
H08K-SCKPR/L06	10	8	5.5	125	16	7	10°	CP..0602..	M2.5*5	Q08	-
H10K-SCKPR/L06	13	10	6	125	20	9	8°	CP..0602..	M2.5*5	Q08	-
H12M-SCKPR/L06	24	12	7	150	24	11	6°	CP..0602..	M2.5*5	Q08	-
H10K-SCKPR/L08	31	10	7	125	20	9	10°	CP..0802..	M3*6	Q08	-
H12M-SCKPR/L08	16	12	7.5	150	24	11	8°	CP..0802..	M3*6	Q08	-
H16N-SCKPR/L08	20	16	9.5	160	32	15	6°	CP..0802..	M3*6	Q08	-
H12M-SCKPR/L09	16	12	8	150	24	11	8°	CP..0903..	M3.5*7	Q15	-
H16N-SCKPR/L09	20	16	9.5	160	32	15	6°	CP..0903..	M3.5*7	Q15	-
C08K-SCKPR/L06	10	8	5.5	125	14	7	10°	CP..0602..	M2.5*5	Q08	-
C10M-SCKPR/L06	13	10	6	150	17	9	8°	CP..0602..	M2.5*5	Q08	-
C12Q-SCKPR/L06	16	12	7	180	20	11	6°	CP..0602..	M2.5*5	Q08	-
C12Q-SCKPR/L09	16	12	8	180	20	11	8°	CP..0903..	M3.5*7	Q15	-
C16R-SCKPR/L09	20	16	9.5	200	27	15	6°	CP..0903..	M3.5*7	Q15	-
C20S-SCKPR/L09	24	20	11.5	250	34	18	4°	CP..0903..	M3.5*7	Q15	-
A08K-SCKCR/L06	10	8	5.5	125	14	7	13°	CC..0602..	M2.5*5	Q08	√
A10K-SCKCR/L06	13	10	6	125	17	9	12°	CC..0602..	M2.5*5	Q08	√
A12M-SCKCR/L06	16	12	7	150	20	11	10°	CC..0602..	M2.5*5	Q08	√
A12M-SCKCR/L09	16	12	8	150	20	11	12°	CC..09T3..	M3.5*7	Q15	√
A16N-SCKCR/L09	20	16	9.5	160	27	15	10°	CC..09T3..	M3.5*7	Q15	√
A20Q-SCKCR/L09	24	20	11.5	180	34	18	8°	CC..09T3..	M3.5*7	Q15	√
A25R-SCKCR/L09	31	25	14	200	43	23	8°	CC..09T3..	M3.5*7	Q15	√
A10K-SCKPR/L08	13	10	7	125	17	9	10°	CP..0802..	M3*6	Q08	√
A12M-SCKPR/L08	16	12	7.5	150	20	11	8°	CP..0802..	M3*6	Q08	√
A16N-SCKPR/L08	20	16	9.5	160	27	15	6°	CP..0802..	M3*6	Q08	√
A12M-SCKPR/L09	16	12	8	150	20	11	8°	CP..0903..	M3.5*7	Q15	√
A16N-SCKPR/L09	20	16	9.5	160	27	15	6°	CP..0903..	M3.5*7	Q15	√
A20Q-SCKPR/L09	24	20	11.5	180	34	18	4°	CP..0903..	M3.5*7	Q15	√

適用 Suitable:德克刀片 DEREK Insert

Type S

SCL*R/L

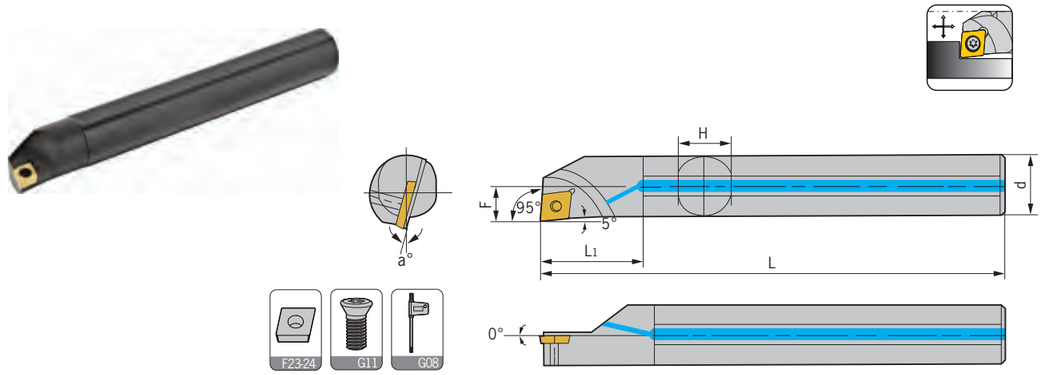

型號 Specification	最小加工径 Min dia	d	F	L	L1	H	a	刀片 Insert	螺絲 Screw	扳手 Wrench	出水孔 Water hole
S07K-SCLCR/L06-A16	9	16	4.5	125	15	15	15°	CC..0602..	M2.5*5	Q08	-
S07K-SCLCR/L06	9	8	4.5	125	12	7	15°	CC..0602..	M2.5*5	Q08	-
S08K-SCLCR/L06	10	8	5	125	14	7	13°	CC..0602..	M2.5*5	Q08	-
S08K-SCLCR/L06-A16	12	16	5	125	21	15	13°	CC..0602..	M2.5*5	Q08	-
S10K-SCLCR/L06-A16	13	16	6	125	26	15	12°	CC..0602..	M2.5*6	Q08	-
S10K-SCLCR/L06	13	10	6	125	17	9	12°	CC..0602..	M2.5*6	Q08	-
S12M-SCLCR/L06	16	12	7	150	20	11	10°	CC..0602..	M2.5*6	Q08	-
S16N-SCLCR/L06	20	16	9	160	27	15	8°	CC..0602..	M2.5*7	Q08	-
S12M-SCLCR/L09	16	12	9	150	20	11	12°	CC..09T3..	M3.5*8	Q15	-
S12M-SCLCR/L09-A16	16	16	9	150	31	15	12°	CC..09T3..	M3.5*8	Q15	-
S16N-SCLCR/L09	20	16	9.5	160	27	15	10°	CC..09T3..	M3.5*8	Q15	-
S20Q-SCLCR/L09	25	20	11.5	180	34	18	8°	CC..09T3..	M3.5*9	Q15	-
S25R-SCLCR/L09	31	25	14	200	34	23	6°	CC..09T3..	M3.5*9	Q15	-
S32S-SCLCR/L09	39	32	17.5	250	54	30	4°	CC..09T3..	M3.5*9	Q15	-
S40T-SCLCR/L09	50	40	21	300	68	37	0°	CC..09T3..	M3.5*9	Q15	-
S20Q-SCLCR/L12	25	20	12	180	34	18	10°	CC..1204..	M5*10	Q20	-
S25R-SCLCR/L12	32	25	14.5	200	43	23	8°	CC..1204..	M5*12	Q20	-
S32S-SCLCR/L12	39	32	18	250	54	30	6°	CC..1204..	M5*12	Q20	-
S40T-SCLCR/L12	50	40	22	300	68	37	4°	CC..1204..	M5*12	Q20	-
H08K-SCLCR/L06	10	8	5	125	16	7	13°	CC..0602..	M2.5*5	Q08	-
H10K-SCLCR/L06	13	10	6	125	20	9	12°	CC..0602..	M2.5*6	Q08	-
H12M-SCLCR/L06	16	12	7	150	24	11	10°	CC..0602..	M2.5*6	Q08	-
H12M-SCLCR/L09	16	12	9	150	24	11	12°	CC..09T3..	M3.5*8	Q15	-
H16N-SCLCR/L09	20	16	9.5	160	32	15	10°	CC..09T3..	M3.5*8	Q15	-
C08K-SCLCR/L06	10	8	5	125	14	7	13°	CC..0602..	M2.5*5	Q08	-
C10M-SCLCR/L06	13	10	6	150	17	9	12°	CC..0602..	M2.5*6	Q08	-
C12Q-SCLCR/L06	16	12	7	180	20	11	10°	CC..0602..	M2.5*6	Q08	-
C12Q-SCLCR/L09	16	12	9	180	20	11	12°	CC..09T3..	M3.5*8	Q15	-
C16R-SCLCR/L09	20	16	9.5	200	27	15	10°	CC..09T3..	M3.5*8	Q15	-
C20S-SCLCR/L09	25	20	11.5	250	34	18	8°	CC..09T3..	M3.5*9	Q15	-
C20S-SCLCR/L12	25	20	12	250	34	18	10°	CC..1204..	M5*10	Q20	-

轉下頁
See next page

Type S

SCL*R/L

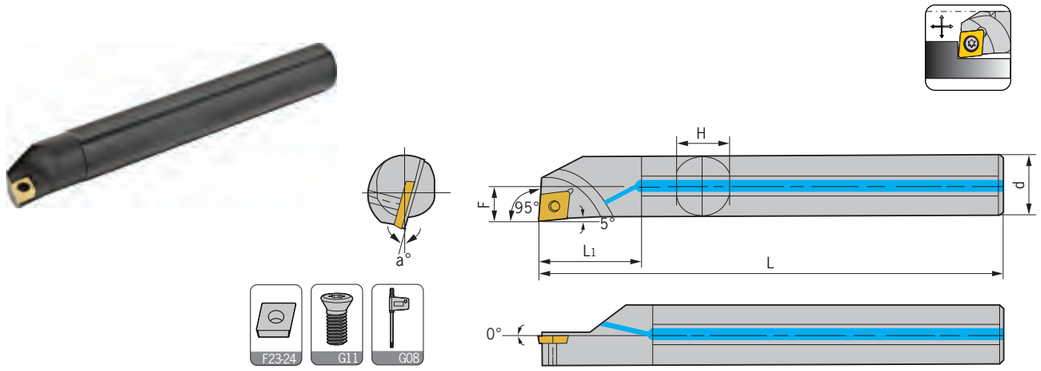

型號 Specification	最小加工径 Min dia	d	F	L	L1	H	a	刀片 Insert	螺絲 Screw	扳手 Wrench	出水孔 Water hole
S08K-SCLPR/L06	10	8	5	125	14	7	10°	CP..0602..	M2.5*5	Q08	-
S10K-SCLPR/L06	13	10	6	125	17	9	8°	CP..0602..	M2.5*5	Q08	-
S12M-SCLPR/L06	16	12	7	150	20	11	6°	CP..0602..	M2.5*6	Q08	-
S10K-SCLPR/L08	13	10	6	125	17	9	8°	CP..0802..	M3*6	Q08	-
S12M-SCLPR/L08	16	12	7	150	20	11	6°	CP..0802..	M3*6	Q08	-
S16N-SCLPR/L08	20	16	9	160	27	15	4°	CP..0802..	M3*7	Q08	-
S20Q-SCLPR/L08	25	20	11	180	34	18	2°	CP..0802..	M3*7	Q08	-
S12M-SCLPR/L09	16	12	9	150	20	11	10°	CP..0903..	M3.5*7	Q15	-
S16N-SCLPR/L09	20	16	9.5	160	27	15	8°	CP..0903..	M3.5*7	Q15	-
S20Q-SCLPR/L09	25	20	11.5	180	34	18	6°	CP..0903..	M3.5*9	Q15	-
S25R-SCLPR/L09	31	25	14	200	43	23	4°	CP..0903..	M3.5*9	Q15	-
S32S-SCLPR/L09	39	32	17.5	250	54	30	4°	CP..0903..	M3.5*9	Q15	-
A07K-SCLCR/L06	9	8	4.5	125	12	7	15°	CC..0602..	M2.5*5	Q08	√
A08K-SCLCR/L06	10	8	5	125	14	7	13°	CC..0602..	M2.5*5	Q08	√
A10K-SCLCR/L06	13	10	6	125	17	9	12°	CC..0602..	M2.5*6	Q08	√
A12M-SCLCR/L06	16	12	7	150	20	11	10°	CC..0602..	M2.5*6	Q08	√
A16N-SCLCR/L06	20	16	9	160	27	15	8°	CC..0602..	M2.5*6	Q08	√
A12M-SCLCR/L09	16	12	9	150	20	11	12°	CC..09T3..	M3.5*7	Q15	√
A16N-SCLCR/L09	20	16	9.5	160	27	15	10°	CC..09T3..	M3.5*7	Q15	√
A20Q-SCLCR/L09	25	20	11.5	180	34	18	8°	CC..09T3..	M3.5*9	Q15	√
A25R-SCLCR/L09	31	25	14	200	43	23	6°	CC..09T3..	M3.5*9	Q15	√
A20Q-SCLCR/L12	25	20	12	180	34	18	10°	CC..1204..	M5*10	Q20	√
A25R-SCLCR/L12	32	25	14.5	200	43	23	8°	CC..1204..	M5*10	Q20	√
A08K-SCLPR/L06	10	8	5	125	14	7	10°	CP..0602..	M2.5*5	Q08	√
A10K-SCLPR/L06	13	10	6	125	17	9	8°	CP..0602..	M2.5*5	Q08	√
A12M-SCLPR/L06	16	12	7	150	20	11	6°	CP..0602..	M2.5*5	Q08	√
A10K-SCLPR/L08	13	10	6	125	17	9	8°	CP..0802..	M3*6	Q08	√
A12M-SCLPR/L08	16	12	7	150	20	11	6°	CP..0802..	M3*6	Q08	√
A16N-SCLPR/L08	20	16	9	160	27	15	4°	CP..0802..	M3*7	Q08	√
A20Q-SCLPR/L08	25	20	11	180	34	18	2°	CP..0802..	M3*7	Q08	√
A12M-SCLPR/L09	16	12	9	150	20	11	10°	CP..0903..	M3.5*7	Q15	√
A16N-SCLPR/L09	20	16	9.5	160	27	15	8°	CP..0903..	M3.5*7	Q15	√
A20Q-SCLPR/L09	25	20	11.5	180	34	18	6°	CP..0903..	M3.5*9	Q15	√
適用 Suitable:德克刀片 DEREK Insert											

Type S

SCLCR/L*H

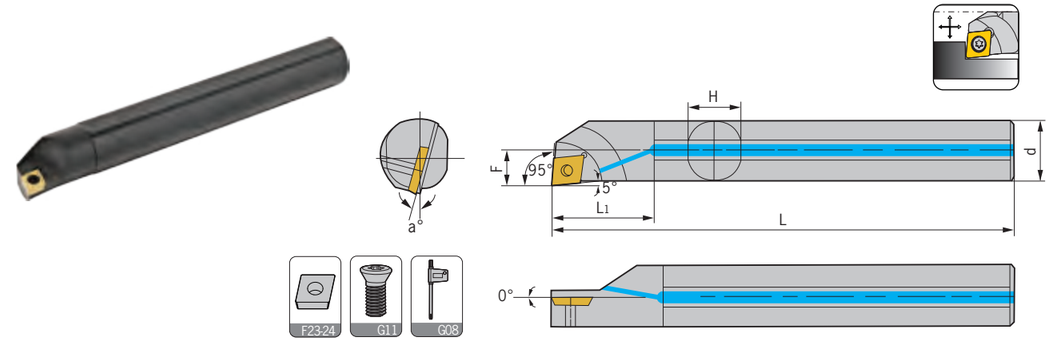

型號 Specification	最小加工径 Min dia	d	F	L	L1	H	a	刀片 Insert	螺絲 Screw	扳手 Wrench	出水孔 Water hole
S08K-SCLCR/L06H09	9	8	4.25	125	14	7	13°	CC..0602..	M2.5*5	Q08	-
S10K-SCLCR/L06H11	11	10	5.25	125	17	9	12°	CC..0602..	M2.5*6	Q08	-
S12M-SCLCR/L06H13	13	12	6.25	150	20	11	10°	CC..0602..	M2.5*6	Q08	-
S16N-SCLCR/L09H17	17	16	8.5	160	27	15	10°	CC..09T3..	M3.5*8	Q15	-
A08K-SCLCR/L06H09	9	8	4.25	125	14	7	13°	CC..0602..	M2.5*5	Q08	√
A10K-SCLCR/L06H11	11	10	5.25	125	17	9	12°	CC..0602..	M2.5*6	Q08	√
A12M-SCLCR/L06H13	13	12	6.25	150	20	11	10°	CC..0602..	M2.5*6	Q08	√
A16N-SCLCR/L09H17	17	16	8.5	160	27	15	10°	CC..09T3..	M3.5*8	Q15	√
適用 Suitable:德克刀片 DEREK Insert											

SCLCR/L*P

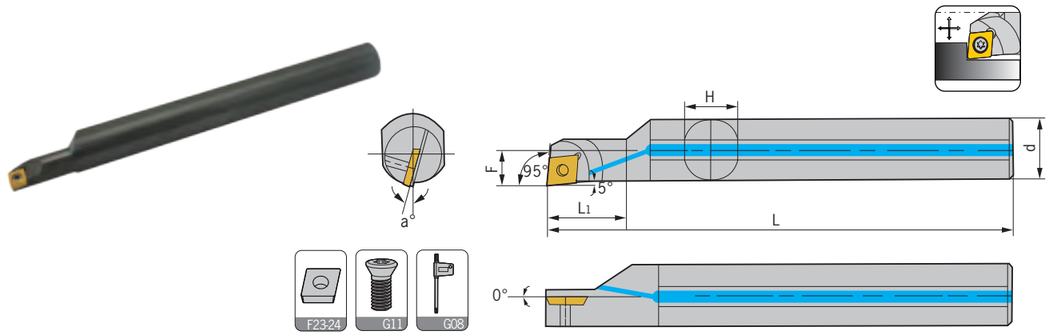

型號 Specification	最小加工径 Min dia	d	F	L	L1	H	a	刀片 Insert	螺絲 Screw	扳手 Wrench	出水孔 Water hole
S12N-SCLCR/L06-16P	16	16	7	160	31	15	10°	CC..0602..	M2.5*6	Q08	-
S16N-SCLCR/L09-20P	20	20	9	160	41	18	8°	CC..09T3..	M2.5*7	Q15	-
S20Q-SCLCR/L09-25P	25	25	11.5	180	51	23	8°	CC..09T3..	M3.5*9	Q15	-
A20Q-SCLCR/L09-25P	25	25	14	180	51	23	8°	CC..09T3..	M3.5*9	Q15	√
適用 Suitable:德克刀片 DEREK Insert											

Type S

SCFCR/L

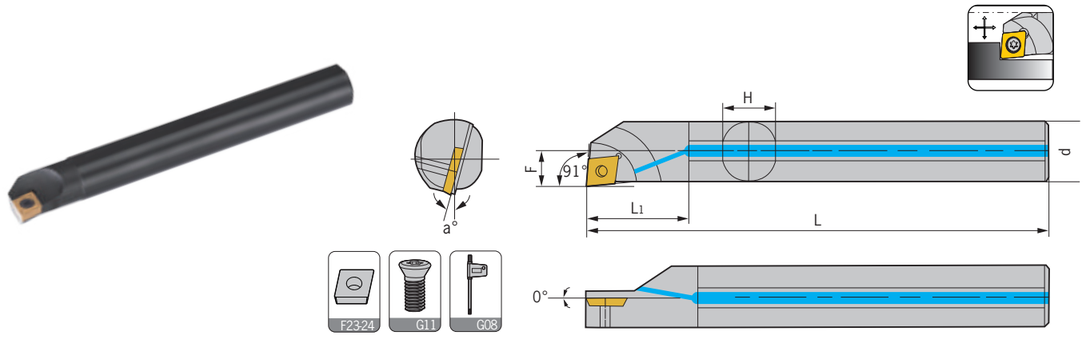

型號 Specification	最小加工径 Min dia	d	F	L	L1	H	a	刀片 Insert	中心螺絲 Center screw	扳手 Wrench
S10K-SCFCR/L06	12	10	6.00	125	17	9	12°	CC..0602..	M2.5*6	Q08
S12M-SCFCR/L06	14	12	7.00	150	20	11	10°	CC..0602..	M2.5*6	Q08
S14N-SCFCR/L06	16	14	8.00	160	24	13	10°	CC..0602..	M2.5*7	Q08
S16N-SCFCR/L06	18	16	9.00	160	27	15	8°	CC..0602..	M2.5*7	Q08
S16N-SCFCR/L09	18	16	9.50	160	27	15	10°	CC..09T3..	M2.5*8	Q15
S20Q-SCFCR/L09	23	20	11.5	180	34	18	8°	CC..09T3..	M2.5*8	Q15
S25R-SCFCR/L09	28	25	14.0	200	43	23	6°	CC..09T3..	M2.5*9	Q15
S20Q-SCFCR/L12	25	20	12.0	180	34	18	10°	CC..1204..	M2.5*9	Q20
S25R-SCFCR/L12	30	25	14.5	200	43	23	8°	CC..1204..	M2.5*12	Q20
S32S-SCFCR/L12	38	32	18.0	250	54	30	6°	CC..1204..	M2.5*12	Q20
S40T-SCFCR/L12	48	40	22.0	300	68	37	4°	CC..1204..	M2.5*12	Q20

適用 Suitable:德克刀片 DEREK Insert

Type S

SCZCR/L

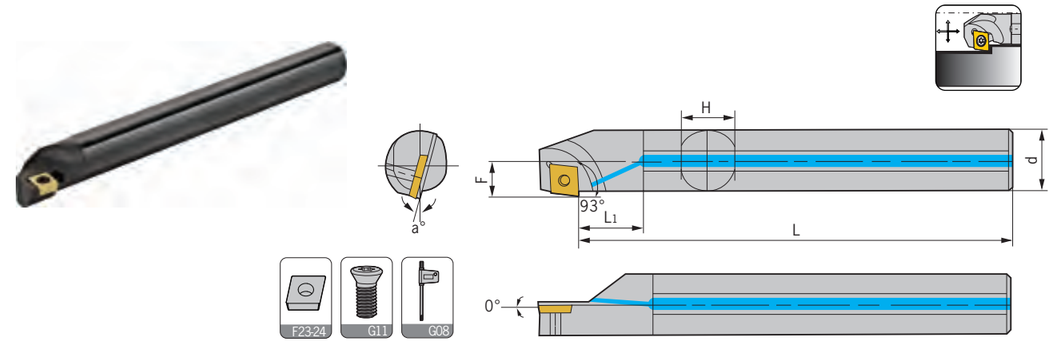

型號 Specification	最小加工径 Min dia	d	F	L	L1	H	a	刀片 Insert	螺絲 Screw	扳手 Wrench	出水孔 Water hole
S08K-SCZCR/L06	12	8	6.5	125	14	7	13°	CC..0602..	M2.5*5	Q08	-
S10K-SCZCR/L06	14	10	7.5	125	17	9	12°	CC..0602..	M2.5*6	Q08	-
S12M-SCZCR/L06	16	12	8.5	150	20	11	10°	CC..0602..	M2.5*6	Q08	-
S16N-SCZCR/L06	20	16	10.5	160	27	15	8°	CC..0602..	M2.5*7	Q08	-
S16N-SCZCR/L09	21	16	11.5	160	27	15	10°	CC..09T3..	M3.5*8	Q15	-
S20Q-SCZCR/L09	25	20	13.5	180	34	18	8°	CC..09T3..	M3.5*9	Q15	-
S25R-SCZCR/L09	32	25	16	200	43	23	6°	CC..09T3..	M3.5*9	Q15	-
H08K-SCZCR/L06	12	8	6.5	125	16	7	13°	CC..0602..	M2.5*5	Q08	-
H10K-SCZCR/L06	14	10	7.5	125	20	9	12°	CC..0602..	M2.5*6	Q08	-
H12M-SCZCR/L06	16	12	8.5	150	24	11	10°	CC..0602..	M2.5*6	Q08	-
H16N-SCZCR/L06	20	16	10.5	160	32	15	8°	CC..0602..	M2.5*7	Q08	-
H16N-SCZCR/L09	21	16	11.5	160	32	15	10°	CC..09T3..	M3.5*9	Q15	-
A08K-SCZCR/L06	12	8	6.5	125	14	7	13°	CC..0602..	M2.5*5	Q08	√
A10K-SCZCR/L06	14	10	7.5	125	17	9	12°	CC..0602..	M2.5*6	Q08	√
A12M-SCZCR/L06	16	12	8.5	150	20	11	10°	CC..0602..	M2.5*6	Q08	√
A16N-SCZCR/L09	21	16	11.5	160	27	15	10°	CC..09T3..	M3.5*9	Q15	√
A20Q-SCZCR/L09	25	20	13.5	180	34	18	8°	CC..09T3..	M3.5*9	Q15	√
A25R-SCZCR/L09	32	25	16	200	43	23	6°	CC..09T3..	M3.5*9	Q15	√

適用 Suitable:德克刀片 DEREK Insert

Type S

SDLCR/L

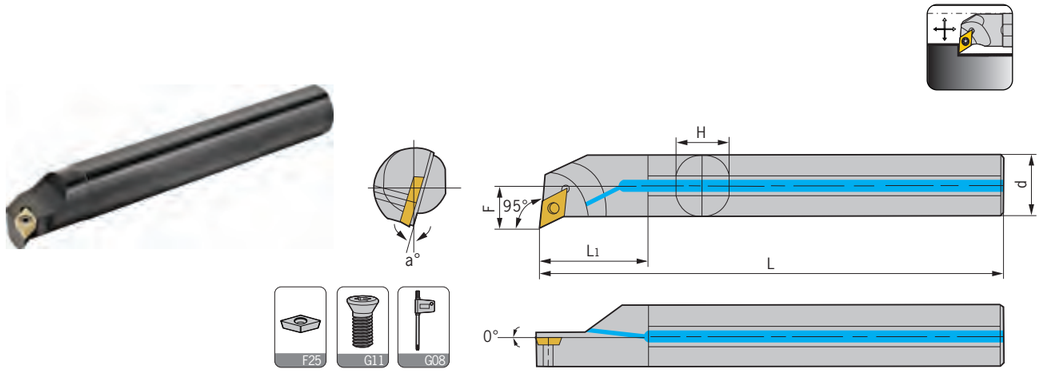

型號 Specification	最小加工径 Min dia	d	F	L	L1	H	a	刀片 Insert	螺絲 Screw	扳手 Wrench	出水孔 Water hole
S10K-SDLCR/L07	15	10	8	125	17	9	10°	DC..0702..	M2.5*6	Q08	-
S12M-SDLCR/L07	17	12	9	150	20	11	8°	DC..0702..	M2.5*6	Q08	-
S16N-SDLCR/L07	22	16	11	160	27	15	6°	DC..0702..	M2.5*7	Q08	-
S20Q-SDLCR/L11	25	20	13	180	34	18	6°	DC..11T3..	M3.5*9	Q15	-
S25R-SDLCR/L11	32	25	16	200	43	23	4°	DC..11T3..	M3.5*9	Q15	-
S32S-SDLCR/L11	39	32	20	250	54	30	4°	DC..11T3..	M3.5*9	Q15	-
S40T-SDLCR/L11	50	40	24	300	68	37	2°	DC..11T3..	M3.5*9	Q15	-
S50U-SDLCR/L11	60	50	29	350	85	47	0°	DC..11T3..	M3.5*9	Q15	-
H10K-SDLCR/L07	15	10	8	125	20	9	10°	DC..0702..	M2.5*6	Q08	-
H12M-SDLCR/L07	17	12	9	150	24	11	8°	DC..0702..	M2.5*6	Q08	-
H16N-SDLCR/L07	22	16	11	160	32	15	6°	DC..0702..	M2.5*7	Q08	-
C10K-SDLCR/L07	15	10	8	125	17	9	10°	DC..0702..	M2.5*6	Q08	-
C12M-SDLCR/L07	17	12	9	150	20	11	8°	DC..0702..	M2.5*6	Q08	-
C16N-SDLCR/L07	22	16	11	160	27	15	6°	DC..0702..	M2.5*7	Q08	-
C20Q-SDLCR/L11	25	20	13	180	34	18	6°	DC..11T3..	M3.5*9	Q15	-
A10K-SDLCR/L07	15	10	8	125	17	9	10°	DC..0702..	M2.5*6	Q08	√
A12M-SDLCR/L07	17	12	9	150	20	11	8°	DC..0702..	M2.5*6	Q08	√
A16N-SDLCR/L07	22	16	11	160	24	15	6°	DC..0702..	M2.5*7	Q08	√
A20Q-SDLCR/L11	25	20	13	180	34	18	6°	DC..11T3..	M3.5*9	Q15	√
A25R-SDLCR/L11	32	25	16	200	43	23	4°	DC..11T3..	M3.5*9	Q15	√

適用 Suitable:德克刀片 DEREK Insert

Type S

SDQCR/L

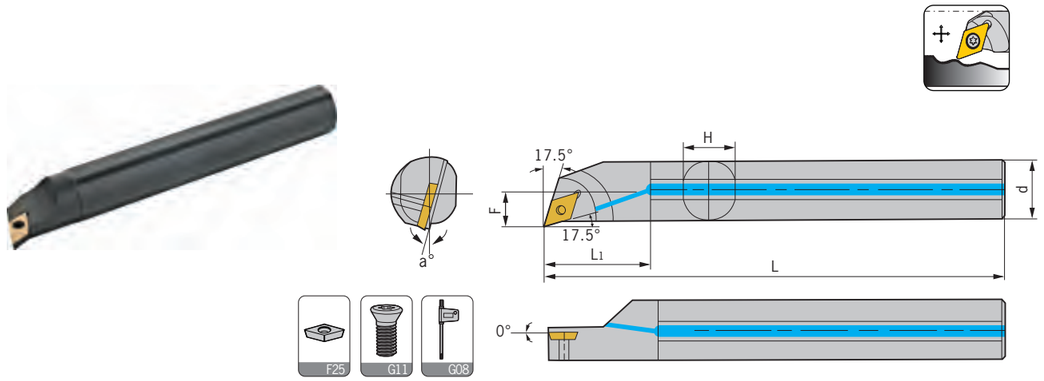

型號 Specification	最小加工径 Min dia	d	F	L	L1	H	a	刀片 Insert	螺絲 Screw	扳手 Wrench	出水孔 Water hole
S10K-SDQCR/L07	13	10	7	125	17	9	10°	DC..0702..	M2.5*6	Q08	-
S12M-SDQCR/L07	16	12	9	150	20	11	8°	DC..0702..	M2.5*6	Q08	-
S16N-SDQCR/L07	20	16	10.5	160	27	15	6°	DC..0702..	M2.5*7	Q08	-
S20Q-SDQCR/L11	25	20	13	180	34	18	6°	DC..11T3..	M3.5*9	Q15	-
S25R-SDQCR/L11	32	25	16	200	43	23	4°	DC..11T3..	M3.5*9	Q15	-
S32S-SDQCR/L11	9	32	20	250	54	30	4°	DC..11T3..	M3.5*9	Q15	-
H10K-SDQCR/L07	13	10	7	125	17	9	10°	DC..0702..	M2.5*6	Q08	-
H12M-SDQCR/L07	16	12	9	150	20	11	8°	DC..0702..	M2.5*6	Q08	-
H16N-SDQCR/L07	20	16	10.5	160	27	15	6°	DC..0702..	M2.5*7	Q08	-
C10K-SDQCR/L07	13	10	7	150	17	9	10°	DC..0702..	M2.5*6	Q08	-
C12M-SDQCR/L07	16	12	9	180	20	11	8°	DC..0702..	M2.5*6	Q08	-
C16N-SDQCR/L07	20	16	10.5	200	27	15	6°	DC..0702..	M2.5*7	Q08	-
C20Q-SDQCR/L11	25	20	13	250	34	19	6°	DC..11T3..	M3.5*9	Q15	-
A10K-SDQCR/L07	13	10	7	125	17	9	10°	DC..0702..	M2.5*6	Q08	√
A12M-SDQCR/L07	16	12	9	150	20	11	8°	DC..0702..	M2.5*6	Q08	√
A16N-SDQCR/L07	20	16	10.5	160	27	15	6°	DC..0702..	M2.5*7	Q08	√
A20Q-SDQCR/L11	25	20	13	180	34	18	6°	DC..11T3..	M3.5*9	Q15	√
A25R-SDQCR/L11	32	25	16	200	43	23	4°	DC..11T3..	M3.5*9	Q15	√

適用 Suitable:德克刀片 DEREK Insert

車刀系列 TURNING TOOLS
外圓車刀 External turning tool
內孔車刀 Internal turning tool
螺紋車刀 Threading tool
切斷&切槽車刀 Grooving tool

Type S

SDUCR/L

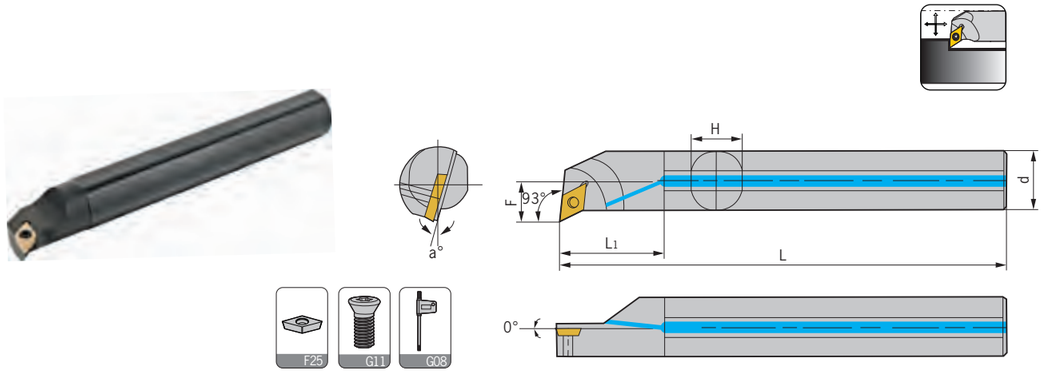

型號 Specification	最小加工径 Min dia	d	F	L	L1	H	a	刀片 Insert	螺絲 Screw	扳手 Wrench	出水孔 Water hole
S10K-SDUCR/L07	15	10	8	125	17	9	10°	DC..0702..	M2.5*6	Q08	-
S12M-SDUCR/L07	17	12	9	150	20	11	8°	DC..0702..	M2.5*6	Q08	-
S14N-SDUCR/L07	19	16	10	160	24	13	6°	DC..0702..	M2.5*6	Q08	-
S16N-SDUCR/L07	22	16	11	160	27	15	6°	DC..0702..	M2.5*7	Q08	-
S20Q-SDUCR/L07	25	20	13	180	34	18	6°	DC..0702..	M2.5*7	Q08	-
S16N-SDUCR/L11	22	16	11	160	27	15	8°	DC..11T3..	M3.5*9	Q15	-
S20Q-SDUCR/L11	25	20	13	180	34	18	6°	DC..11T3..	M3.5*9	Q15	-
S25R-SDUCR/L11	32	25	16	200	43	23	4°	DC..11T3..	M3.5*9	Q15	-
S32S-SDUCR/L11	39	32	20	250	54	30	4°	DC..11T3..	M3.5*9	Q15	-
S40T-SDUCR/L11	50	40	24	300	68	37	2°	DC..11T3..	M3.5*9	Q15	-
S50U-SDUCR/L11	60	50	29	350	85	47	0°	DC..11T3..	M3.5*9	Q15	-
H10K-SDUCR/L07	15	10	8	125	20	9	10°	DC..0702..	M2.5*6	Q08	-
H12M-SDUCR/L07	17	12	9	150	24	11	8°	DC..0702..	M2.5*6	Q08	-
H16N-SDUCR/L07	22	16	11	160	32	15	6°	DC..0702..	M2.5*7	Q08	-
C10K-SDUCR/L07	15	10	8	125	17	9	10°	DC..0702..	M2.5*6	Q08	-
C12M-SDUCR/L07	17	12	9	150	20	11	8°	DC..0702..	M2.5*6	Q08	-
C16N-SDUCR/L07	22	16	11	160	27	15	6°	DC..0702..	M2.5*7	Q08	-
C20Q-SDUCR/L11	25	20	13	180	34	19	6°	DC..11T3..	M3.5*9	Q15	-
A10K-SDUCR/L07	15	10	8	125	17	9	10°	DC..0702..	M2.5*6	Q08	√
A12M-SDUCR/L07	17	12	9	150	20	11	8°	DC..0702..	M2.5*6	Q08	√
A14N-SDUCR/L07	19	16	10	160	24	13	6°	DC..0702..	M2.5*6	Q08	√
A16N-SDUCR/L07	22	16	11	160	27	15	6°	DC..0702..	M2.5*7	Q08	√
A20Q-SDUCR/L07	25	20	13	180	34	18	6°	DC..0702..	M2.5*7	Q08	√
A16N-SDUCR/L11	22	16	11	160	27	15	8°	DC..11T3..	M3.5*9	Q15	√
A20Q-SDUCR/L11	25	20	13	180	34	18	6°	DC..11T3..	M3.5*9	Q15	√
A25R-SDUCR/L11	32	25	16	200	43	23	4°	DC..11T3..	M3.5*9	Q15	√

適用 Suitable:德克刀片 DEREK Insert

Type S

SDWCR/L

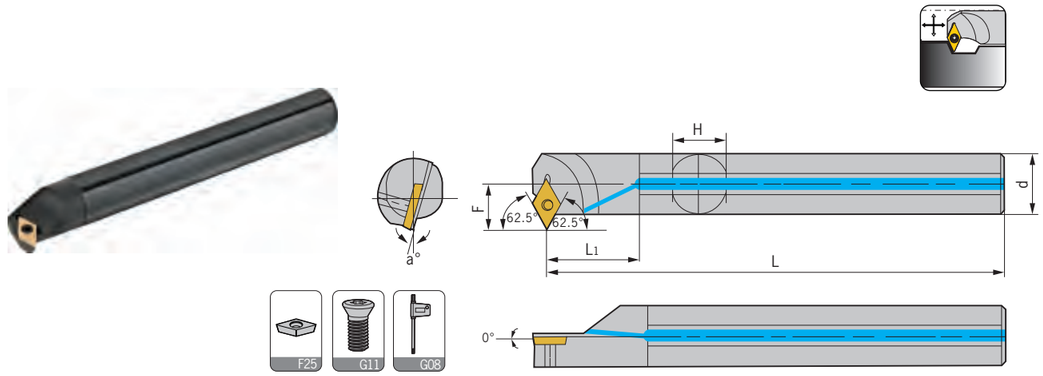

型號 Specification	最小加工径 Min dia	d	F	L	L1	H	a	刀片 Insert	螺絲 Screw	扳手 Wrench	出水孔 Water hole
S12M-SDWCR/L07	19	12	10.5	150	20	11	10°	DC..0702..	M2.5*7	Q08	-
S16N-SDWCR/L07	23	16	12.5	160	27	15	8°	DC..0702..	M2.5*7	Q08	-
S20Q-SDWCR/L07	27	20	14.5	180	34	18	6°	DC..0702..	M2.5*7	Q08	-
S20Q-SDWCR/L11	25	20	14.5	180	34	18	6°	DC..11T3..	M3.5*9	Q15	-
S25R-SDWCR/L11	32	25	17	200	43	23	4°	DC..11T3..	M3.5*9	Q15	-
S32S-SDWCR/L11	40	32	20	250	54	30	2°	DC..11T3..	M3.5*9	Q15	-
H12M-SDWCR/L07	19	12	10.5	150	20	11	10°	DC..0702..	M2.5*7	Q08	-
H16N-SDWCR/L07	23	16	12.5	160	27	15	8°	DC..0702..	M2.5*7	Q08	-
A12M-SDWCR/L07	19	12	10.5	150	20	11	10°	DC..0702..	M2.5*7	Q08	√
A16N-SDWCR/L07	23	16	12.5	160	27	15	8°	DC..0702..	M2.5*7	Q08	√
A20Q-SDWCR/L07	27	20	14.5	180	34	18	6°	DC..0702..	M2.5*7	Q08	√
A20Q-SDWCR/L11	25	20	14.5	180	34	18	6°	DC..11T3..	M3.5*9	Q15	√
A25R-SDWCR/L11	32	25	17	200	43	23	4°	DC..11T3..	M3.5*9	Q15	√
A32S-SDWCR/L11	40	32	20	250	54	30	2°	DC..11T3..	M3.5*9	Q15	√

適用 Suitable:德克刀片 DEREK Insert

車刀系列 TURNING TOOLS
外圓車刀 External turning tool
內孔車刀 Internal turning tool
螺紋車刀 Threading tool
切斷&切槽車刀 Grooving tool

Type S

SDZCR/L

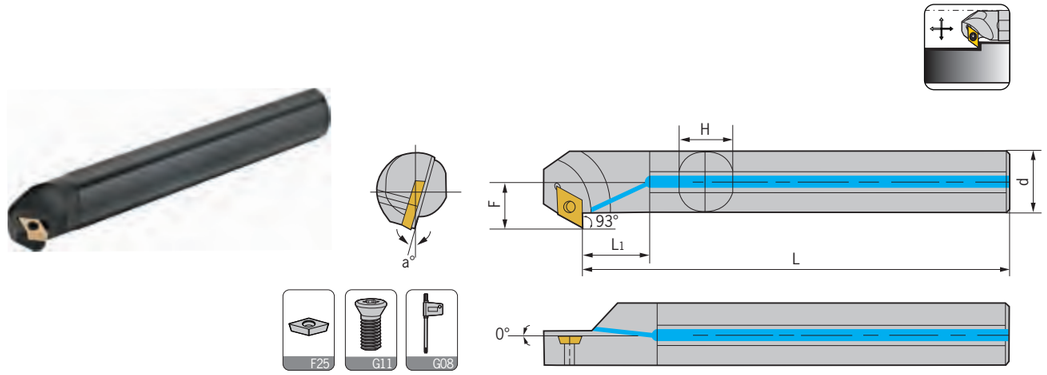

型號 Specification	最小加工径 Min dia	d	F	L	L1	H	a	刀片 Insert	螺絲 Screw	扳手 Wrench	出水孔 Water hole
S10K-SDZCR/L07	15	10	8.5	125	17	9	12°	DC..0702..	M2.5*6	Q08	-
S12M-SDZCR/L07	18	12	9.5	150	20	11	10°	DC..0702..	M2.5*7	Q08	-
S16N-SDZCR/L07	24	16	11.5	160	27	15	8°	DC..0702..	M2.5*7	Q08	-
S20Q-SDZCR/L11	28	20	14.5	180	34	18	8°	DC..11T3..	M3.5*9	Q15	-
S25R-SDZCR/L11	34	25	17	200	43	23	6°	DC..11T3..	M3.5*9	Q15	-
S32S-SDZCR/L11	38	32	20.5	250	54	30	4°	DC..11T3..	M3.5*9	Q15	-
H10Q-SDZCR/L07	15	10	8.5	125	17	9	12°	DC..0702..	M2.5*6	Q08	-
H12M-SDZCR/L07	18	12	9.5	150	20	11	10°	DC..0702..	M2.5*7	Q08	-
H16N-SDZCR/L07	24	16	11.5	160	27	15	8°	DC..0702..	M2.5*7	Q08	-
A10K-SDZCR/L07	15	10	8.5	125	17	9	12°	DC..0702..	M2.5*6	Q08	√
A12M-SDZCR/L07	18	12	9.5	150	20	11	10°	DC..0702..	M2.5*7	Q08	√
A16N-SDZCR/L07	24	16	11.5	160	27	15	8°	DC..0702..	M2.5*7	Q08	√
A20Q-SDZCR/L07	26	20	13.5	180	20	18	8°	DC..0702..	M2.5*7	Q08	√
A25R-SDZCR/L07	32	25	16	200	27	23	8°	DC..0702..	M2.5*7	Q08	√
A20Q-SDZCR/L11	28	20	14.5	180	34	18	8°	DC..11T3..	M3.5*9	Q15	√
A25R-SDZCR/L11	34	25	17	200	43	23	6°	DC..11T3..	M3.5*9	Q15	√
A32S-SDZCR/L11	38	32	20.5	250	54	30	4°	DC..11T3..	M3.5*9	Q15	√

適用 Suitable:德克刀片 DEREK Insert

Type S

SDXCR/L

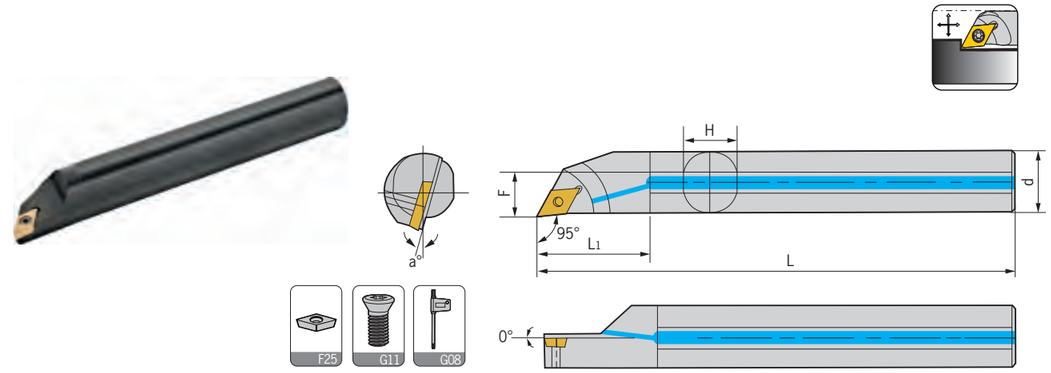

型號 Specification	最小加工径 Min dia	d	F	L	L1	H	a	刀片 Insert	螺絲 Screw	扳手 Wrench	出水孔 Water hole
S08K-SDXCR/L07-G5	10	8	5	125	14	7	12°	DC..0702..	M2.5*5	Q08	-
S10K-SDXCR/L07-G5	13	10	6	125	17	9	10°	DC..0702..	M2.5*5	Q08	-
S12M-SDXCR/L07-G5	16	12	7	150	20	11	8°	DC..0702..	M2.5*6	Q08	-
S16N-SDXCR/L07-G5	20	16	9	160	27	15	6°	DC..0702..	M2.5*7	Q08	-
S16N-SDXCR/L11-G5	20	16	9	160	27	15	8°	DC..11T3..	M3.5*8	Q15	-
S20Q-SDXCR/L11-G5	25	20	11.5	180	34	18	6°	DC..11T3..	M3.5*9	Q15	-
S25R-SDXCR/L11-G5	32	25	14	200	43	23	4°	DC..11T3..	M3.5*9	Q15	-
H08K-SDXCR/L07-G5	10	8	5	125	16	7	12°	DC..0702..	M2.5*5	Q08	-
H10K-SDXCR/L07-G5	13	10	6	125	20	9	10°	DC..0702..	M2.5*5	Q08	-
H12M-SDXCR/L07-G5	16	12	7	150	24	11	8°	DC..0702..	M2.5*6	Q08	-
H16N-SDXCR/L07-G5	20	16	9	160	32	15	6°	DC..0702..	M2.5*7	Q08	-
A08K-SDXCR/L07-G5	10	8	5	125	14	7	12°	DC..0702..	M2.5*5	Q08	√
A10K-SDXCR/L07-G5	13	10	6	125	17	9	10°	DC..0702..	M2.5*5	Q08	√
A12M-SDXCR/L07-G5	16	12	7	150	20	11	8°	DC..0702..	M2.5*6	Q08	√
A16N-SDXCR/L07-G5	20	16	9	160	27	15	6°	DC..0702..	M2.5*7	Q08	√
A16N-SDXCR/L11-G5	20	16	9	160	27	15	8°	DC..11T3..	M3.5*8	Q15	√
A20Q-SDXCR/L11-G5	25	20	11.5	180	34	18	6°	DC..11T3..	M3.5*9	Q15	√
A25R-SDXCR/L11-G5	32	25	14	200	43	23	4°	DC..11T3..	M3.5*9	Q15	√

適用 Suitable:德克刀片 DEREK Insert

Type S

SSK*R/L

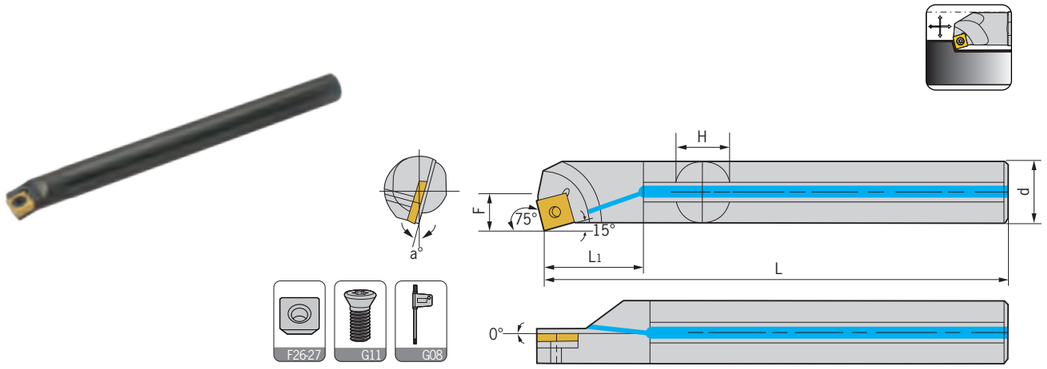

型號 Specification	最小加工径 Min dia	d	F	L	L1	H	a	刀片 Insert	螺絲 Screw	扳手 Wrench	出水孔 Water hole
S12M-SSKCR/L09	16	12	8.5	150	20	11	12°	SC..09T3..	M3.5*8	Q15	-
S16N-SSKCR/L09	20	16	10.5	160	27	15	10°	SC..09T3..	M3.5*8	Q15	-
S20Q-SSKCR/L09	24	20	12.5	180	34	18	8°	SC..09T3..	M3.5*9	Q15	-
S25R-SSKCR/L09	31	25	15	200	43	23	6°	SC..09T3..	M3.5*9	Q15	-
H12M-SSKCR/L09	16	12	8.5	150	20	11	12°	SC..09T3..	M3.5*8	Q15	-
H16N-SSKCR/L09	20	16	10.5	160	27	15	10°	SC..09T3..	M3.5*8	Q15	-
S12M-SSKPR/L09	16	12	8.5	150	20	11	8°	SP..0903..	M3.5*8	Q15	-
S16N-SSKPR/L09	20	16	10.5	160	27	15	6°	SP..0903..	M3.5*8	Q15	-
H12M-SSKPR/L09	16	12	8.5	150	20	11	8°	SP..0903..	M3.5*8	Q15	-
H16N-SSKPR/L09	20	16	10.5	160	27	15	6°	SP..0903..	M3.5*8	Q15	-
A12M-SSKCR/L09	16	12	8.5	150	20	11	12°	SC..09T3..	M3.5*8	Q15	√
A16N-SSKCR/L09	20	16	10.5	160	27	15	10°	SC..09T3..	M3.5*8	Q15	√
A20Q-SSKCR/L09	24	20	12.5	180	34	18	8°	SC..09T3..	M3.5*9	Q15	√
A25R-SSKCR/L09	31	25	15	200	43	23	6°	SC..09T3..	M3.5*9	Q15	√
A12M-SSKPR/L09	16	12	8.5	150	20	11	8°	SP..0903..	M3.5*8	Q15	√
A16N-SSKPR/L09	20	16	10.5	160	27	15	6°	SP..0903..	M3.5*8	Q15	√

適用 Suitable:德克刀片 DEREK Insert

Type S

SSS*R/L

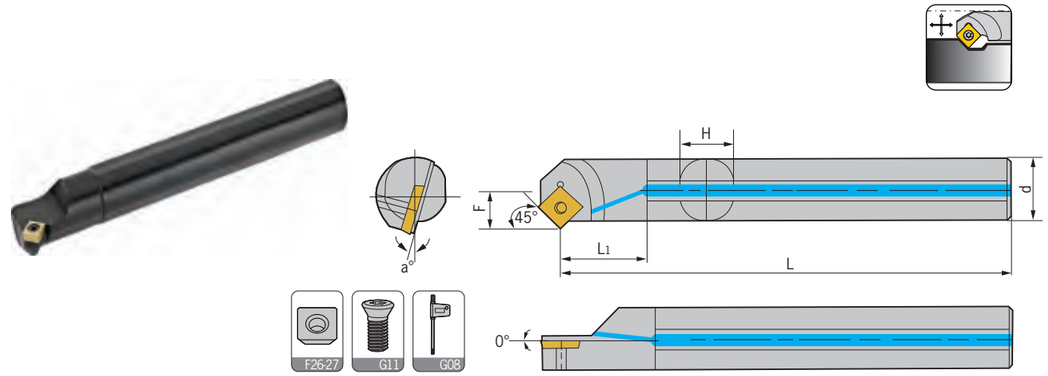

型號 Specification	最小加工径 Min dia	d	F	L	L1	H	a	刀片 Insert	螺絲 Screw	扳手 Wrench	出水孔 Water hole
S12M-SSSCR/L09	16	12	8.5	150	20	11	12°	SC..09T3..	M3.5*8	Q15	-
S16N-SSSCR/L09	22	16	11.5	160	27	15	10°	SC..09T3..	M3.5*9	Q15	-
S20Q-SSSCR/L09	26	20	13.5	180	34	18	8°	SC..09T3..	M3.5*9	Q15	-
S25R-SSSCR/L09	31	25	16	200	43	23	6°	SC..09T3..	M3.5*9	Q15	-
S32S-SSSCR/L09	38	32	19.5	250	58	30	4°	SC..09T3..	M3.5*9	Q15	-
H12M-SSSCR/L09	16	12	8.5	150	20	11	12°	SC..09T3..	M3.5*8	Q15	-
H16N-SSSCR/L09	22	16	11.5	160	27	15	10°	SC..09T3..	M3.5*9	Q15	-
S12M-SSSPR/L09	16	12	9	150	20	11	8°	SP..0903..	M3.5*7	Q15	-
S16N-SSSPR/L09	20	16	11	160	27	15	6°	SP..0903..	M3.5*7	Q15	-
S20Q-SSSPR/L09	24	20	13	180	34	18	4°	SP..0903..	M3.5*9	Q15	-
S25R-SSSPR/L09	32	25	17	200	43	23	2°	SP..0903..	M3.5*9	Q15	-
S32S-SSSPR/L09	40	32	22	250	58	30	0°	SP..0903..	M3.5*9	Q15	-
H12M-SSSPR/L09	16	12	9	150	20	11	8°	SP..0903..	M3.5*9	Q15	-
H16N-SSSPR/L09	20	16	11	160	27	15	6°	SP..0903..	M3.5*9	Q15	-
A12M-SSSCR/L09	16	12	8.5	150	20	11	12°	SC..09T3..	M3.5*8	Q15	√
A16N-SSSCR/L09	22	16	11.5	160	27	15	10°	SC..09T3..	M3.5*9	Q15	√
A20Q-SSSCR/L09	26	20	13.5	180	34	18	8°	SC..09T3..	M3.5*9	Q15	√
A25R-SSSCR/L09	31	25	16	200	43	23	6°	SC..09T3..	M3.5*9	Q15	√
A12M-SSSPR/L09	16	12	9	150	20	11	8°	SP..0903..	M3.5*7	Q15	√
A16N-SSSPR/L09	20	16	11	160	27	15	6°	SP..0903..	M3.5*7	Q15	√
A20Q-SSSPR/L09	24	20	13	180	34	18	4°	SP..0903..	M3.5*9	Q15	√
A25R-SSSPR/L09	32	25	17	200	43	23	2°	SP..0903..	M3.5*9	Q15	√

適用 Suitable:德克刀片 DEREK Insert

Type S

STFCR/L



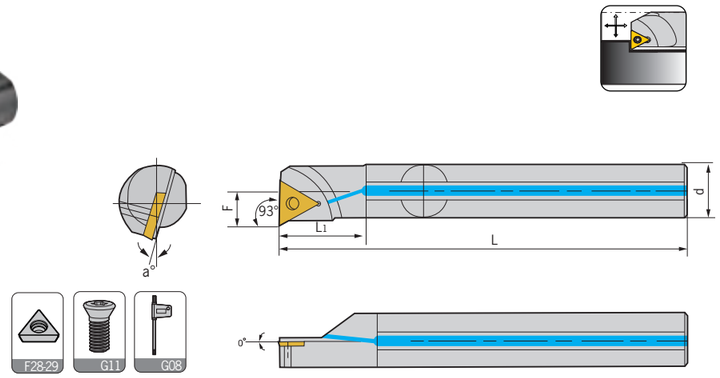

型號 Specification	最小加工径 Min dia	d	F	L1	L	H	a	刀片 Insert	螺絲 Screw	扳手 Wrench	出水孔 Water hole
S08K-STFCR/L09	11	8	5.5	15	125	7	15°	TC..0902..	M2.2*6	Q06	-
S10K-STFCR/L09	13	10	6	17	125	9	13°	TC..0902..	M2.2*6	Q06	-
S12M-STFCR/L09	16	12	7	20	150	11	10°	TC..0902..	M2.2*6	Q06	-
S10K-STFCR/L11	12	10	6	17	125	9	12°	TC..1102..	M2.5*6	Q08	-
S12M-STFCR/L11	14	12	7	20	150	11	10°	TC..1102..	M2.5*6	Q08	-
S16N-STFCR/L11	20	16	9	27	160	15	8°	TC..1102..	M2.5*7	Q08	-
S20Q-STFCR/L11	25	20	11	34	180	18	6°	TC..1102..	M2.5*7	Q08	-
S20Q-STFCR/L16	25	20	11.5	34	180	18	8°	TC..16T3..	M3.5*9	Q15	-
S25R-STFCR/L16	31	25	14	43	200	23	6°	TC..16T3..	M3.5*9	Q15	-
S32S-STFCR/L16	39	32	17.5	54	250	30	4°	TC..16T3..	M3.5*9	Q15	-
S40T-STFCR/L16	50	40	21.5	68	300	37	2°	TC..16T3..	M3.5*9	Q15	-
S50U-STFCR/L16	60	50	26.5	85	350	47	0°	TC..16T3..	M3.5*9	Q15	-
H08K-STFCR/L09	11	8	5.5	15	125	7	15°	TC..0902..	M2.2*6	Q06	-
H10K-STFCR/L09	13	10	6	17	125	9	13°	TC..0902..	M2.2*5	Q06	-
H10K-STFCR/L11	13	10	6	17	125	9	12°	TC..1102..	M2.5*6	Q08	-
H12M-STFCR/L11	14	12	7	20	150	11	10°	TC..1102..	M2.5*6	Q08	-
H16N-STFCR/L11	20	16	9	27	160	15	8°	TC..1102..	M2.5*7	Q08	-
C08K-STFCR/L09	11	8	5.5	15	125	7	15°	TC..0902..	M2.2*6	Q06	-
C10M-STFCR/L09	13	10	6	17	150	9	13°	TC..0902..	M2.2*6	Q06	-
C12Q-STFCR/L09	16	12	7	20	180	11	10°	TC..0902..	M2.2*6	Q06	-
C10M-STFCR/L11	13	10	6	17	150	9	12°	TC..1102..	M2.5*6	Q08	-
C12Q-STFCR/L11	14	12	7	20	180	11	10°	TC..1102..	M2.5*6	Q08	-
C16R-STFCR/L11	20	16	9	27	200	15	8°	TC..1102..	M2.5*7	Q08	-
C20S-STFCR/L11	25	20	11	34	250	19	8°	TC..1102..	M2.5*7	Q08	-
A08K-STFCR/L09	11	8	5.5	15	125	7	15°	TC..0902..	M2.2*6	Q06	√
A10K-STFCR/L09	13	10	6	17	125	9	13°	TC..0902..	M2.2*6	Q06	√
A12M-STFCR/L11	14	12	7	20	150	11	10°	TC..1102..	M2.5*6	Q08	√
A16N-STFCR/L11	20	16	9	27	160	15	8°	TC..1102..	M2.5*7	Q08	√
A20Q-STFCR/L16	25	20	11.5	34	180	18	8°	TC..16T3..	M3.5*9	Q15	√
A25R-STFCR/L16	31	25	14	43	200	23	6°	TC..16T3..	M3.5*9	Q15	√

適用 Suitable:德克刀片 DEREK Insert

Type S

STFPR/L



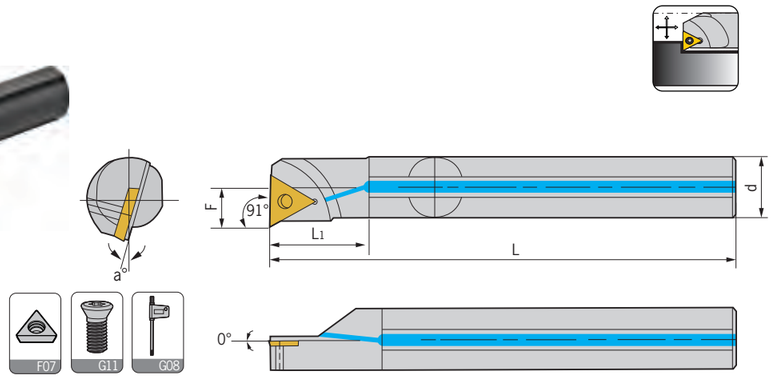

型號 Specification	最小加工径 Min dia	d	F	L1	L	H	a	刀片 Insert	螺絲 Screw	扳手 Wrench	出水孔 Water hole
S10K-STFPR/L08	13	10	6	17	125	9	8°	TP..0802..	M2*5	Q06	-
S08K-STFPR/L09	11	8	5	15	125	7	10°	TP..0902..	M2.5*5	Q08	-
S10K-STFPR/L09	13	10	6	17	125	9	8°	TP..0902..	M2.5*6	Q08	-
S10K-STFPR/L11	13	10	6	17	125	9	12°	TP..1103..	M3*6	Q08	-
S12M-STFPR/L11	16	12	7	20	150	11	10°	TP..1103..	M3*6	Q08	-
S16N-STFPR/L11	20	16	9	27	160	15	8°	TP..1103..	M3*7	Q08	-
S20Q-STFPR/L11	24	20	11	34	180	18	6°	TP..1103..	M3*7	Q08	-
S20Q-STFPR/L16	24	20	11.5	34	180	18	6°	TP..1603..	M3.5*9	Q15	-
S25R-STFPR/L16	31	25	14	43	200	23	4°	TP..1603..	M3.5*9	Q15	-
C08K-STFPR/L09	11	8	5	15	125	7	10°	TP..0902..	M2.5*5	Q08	-
C10M-STFPR/L09	13	10	6	17	150	9	8°	TP..0902..	M2.5*6	Q08	-
C10M-STFPR/L11	13	10	6	17	150	9	12°	TP..1103..	M3*6	Q08	-
C12Q-STFPR/L11	16	12	7	20	180	11	10°	TP..1103..	M3*6	Q08	-
C16R-STFPR/L11	20	16	9	27	200	15	8°	TP..1103..	M3*7	Q08	-
C20S-STFPR/L11	24	20	11	34	250	19	6°	TP..1103..	M3*7	Q08	-
H08K-STFPR/L09	11	8	5	15	125	7	10°	TP..0902..	M2.5*5	Q08	-
H10K-STFPR/L09	13	10	6	17	125	9	8°	TP..0902..	M2.5*6	Q08	-
H10K-STFPR/L11	13	10	6	17	125	9	12°	TP..1103..	M3*6	Q08	-
H12M-STFPR/L11	16	12	7	20	150	11	10°	TP..1103..	M3*6	Q08	-
H16N-STFPR/L11	20	16	9	27	160	15	8°	TP..1103..	M3*7	Q08	-
A10K-STFPR/L08	13	10	6	17	125	9	8°	TP..0802..	M2*5	Q06	√
A08K-STFPR/L09	11	8	5	15	125	7	10°	TP..0902..	M2.5*6	Q08	√
A10K-STFPR/L09	13	10	6	17	125	9	8°	TP..0902..	M2.5*6	Q08	√
A12M-STFPR/L11	16	12	7	20	150	11	10°	TP..1103..	M3*6	Q08	√
A16N-STFPR/L11	20	16	9	27	160	15	8°	TP..1103..	M3*7	Q08	√
A20Q-STFPR/L16	24	20	11.5	34	180	18	6°	TP..1603..	M3.5*9	Q15	√
A25R-STFPR/L16	31	25	14	43	200	23	4°	TP..1603..	M3.5*9	Q15	√

適用 Suitable:德克刀片 DEREK Insert

Type S

STUCR/L

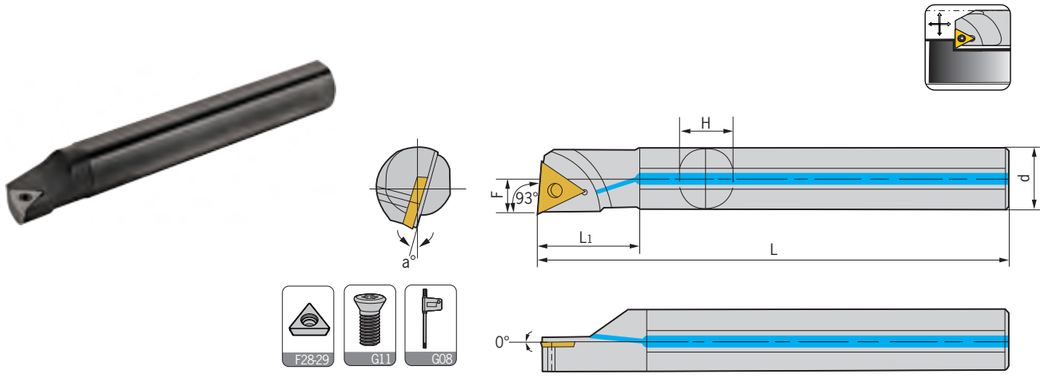

型號 Specification	最小加工径 Min dia	d	F	L1	L	H	a	刀片 Insert	螺絲 Screw	扳手 Wrench	出水孔 Water hole
S08K-STUCR/L09	11	8	5	15	125	7	10°	TC..0902..	M2.2*6	Q06	-
S08K-STUCR/09-A16	11	16	5	20	125	15	10°	TC..0902..	M2.2*6	Q06	-
S10K-STUCR/L09	13	10	6	17	125	9	8°	TC..0902..	M2.2*6	Q06	-
S10K-STUCR/L09-A16	13	16	6	27	125	15	8°	TC..0902..	M2.2*6	Q06	-
S10K-STUCR/L11	13	10	6	17	125	9	12°	TC..1102..	M2.5*6	Q08	-
S10K-STUCR/L11-A16	13	16	6	27	125	15	12°	TC..1102..	M2.5*6	Q08	-
S12M-STUCR/L11	16	12	7	20	150	11	10°	TC..1102..	M2.5*6	Q08	-
S12M-STUCR/L11-A16	16	16	7	34	150	15	10°	TC..1102..	M2.5*6	Q08	-
S16N-STUCR/L11	20	16	9	27	160	15	8°	TC..1102..	M2.5*7	Q08	-
S20Q-STUCR/L11	24	20	11	34	180	18	6°	TC..1102..	M2.5*7	Q08	-
S20Q-STUCR/L16	25	20	11.5	34	180	18	8°	TC..16T3..	M3.5*9	Q15	-
S25R-STUCR/L16	31	25	14	43	200	23	6°	TC..16T3..	M3.5*9	Q15	-
S32S-STUCR/L16	39	32	17.5	54	250	30	4°	TC..16T3..	M3.5*9	Q15	-
S40T-STUCR/L16	50	40	21.5	68	300	37	2°	TC..16T3..	M3.5*9	Q15	-
S50U-STUCR/L16	60	50	26.5	85	350	47	0°	TC..16T3..	M3.5*9	Q15	-
H08K-STUCR/L09	11	8	5	15	125	7	10°	TC..0902..	M2.2*5	Q06	-
H10K-STUCR/L09	13	10	6	17	150	9	8°	TC..0902..	M2.2*5	Q06	-
H10K-STUCR/L11	13	10	6	17	150	9	8°	TC..1102..	M2.5*7	Q08	-
H12M-STUCR/L11	16	12	7	20	180	11	6°	TC..1102..	M2.5*6	Q08	-
H16R-STUCR/L11	20	16	9	27	200	15	4°	TC..1102..	M2.5*7	Q08	-
A08K-STUCR/L09	11	8	5	15	125	7	10°	TC..0902..	M2.2*5	Q06	√
A10K-STUCR/L11	13	10	6	17	125	9	12°	TC..1102..	M2.5*6	Q08	√
A12M-STUCR/L11	16	12	7	20	150	11	10°	TC..1102..	M2.5*6	Q08	√
A16N-STUCR/L11	20	16	9	27	160	15	8°	TC..1102..	M2.5*7	Q08	√
A20Q-STUCR/L11	24	20	11	34	180	18	6°	TC..1102..	M2.5*7	Q08	√

適用 Suitable:德克刀片 DEREK Insert

Type S

STUPR/L

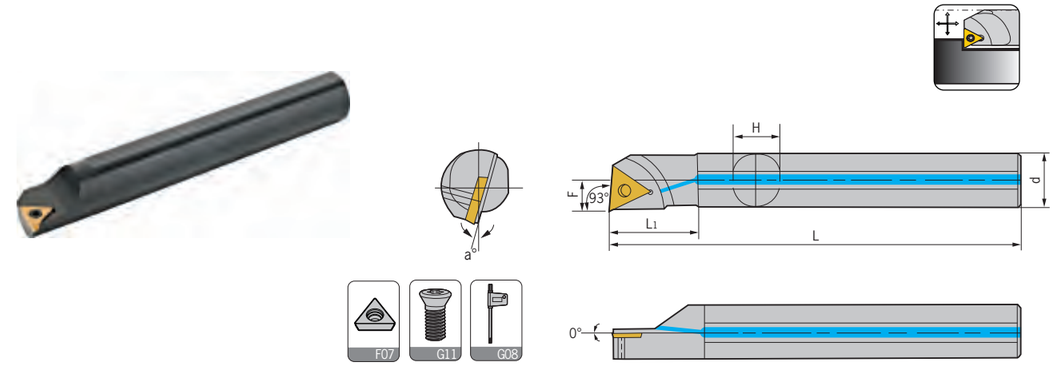

型號 Specification	最小加工径 Min dia	d	F	L1	L	H	a	刀片 Insert	螺絲 Screw	扳手 Wrench	出水孔 Water hole
S08K-STUPR/L09	11	8	5	15	125	7	10°	TP..0902..	M2.5*5	Q08	-
S10K-STUPR/L09	13	10	6	17	125	9	8°	TP..0902..	M2.5*6	Q08	-
S10K-STUPR/L11	13	10	6	17	125	9	12°	TP..1103..	M3*6	Q08	-
S12M-STUPR/L11	16	12	7	20	150	11	10°	TP..1103..	M3*6	Q08	-
S16N-STUPR/L11	20	16	9	27	160	15	8°	TP..1103..	M3*7	Q08	-
S20Q-STUPR/L11	24	20	11	34	180	18	6°	TP..1103..	M3*7	Q08	-
S20Q-STUPR/L16	24	20	11.5	34	180	18	6°	TP..1603..	M3.5*9	Q15	-
S25R-STUPR/L16	31	25	14.5	43	200	24	4°	TP..1603..	M3.5*9	Q15	-
A08K-STUPR/L09	11	8	5	15	125	7	10°	TP..0902..	M2.5*5	Q08	√
A10K-STUPR/L11	13	10	6	17	125	9	12°	TP..1103..	M3*6	Q08	√
A12M-STUPR/L11	16	12	7	20	150	11	10°	TP..1103..	M3*6	Q08	√
A16N-STUPR/L11	20	16	9	27	160	15	8°	TP..1103..	M3*7	Q08	√
A20Q-STUPR/L16	24	20	11.5	34	180	18	6°	TP..1603..	M3.5*9	Q15	√
A25R-STUPR/L16	31	25	14.5	43	200	23	4°	TP..1603..	M3.5*9	Q15	√

適用 Suitable:德克刀片 DEREK Insert

Type S

STWCR/L



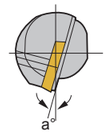

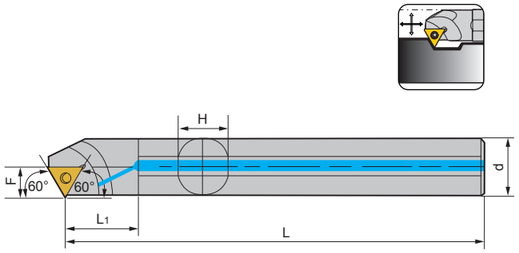

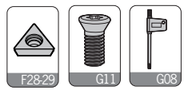

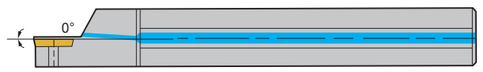

型號 Specification	最小加工径 Min dia	d	F	L1	L	H	a	刀片 Insert	螺絲 Screw	扳手 Wrench	出水孔 Water hole
S08K-STWCR/L09	11	8	5.5	15	125	7	12°	TC..0902..	M2.2*5	Q06	-
S10K-STWCR/L11	14	10	8	17	125	9	10°	TC..1102..	M2.5*7	Q08	-
S12M-STWCR/L11	16	12	9	20	150	11	8°	TC..1102..	M2.5*7	Q08	-
S16N-STWCR/L11	20	16	11	27	160	15	6°	TC..1102..	M2.5*7	Q08	-
S20Q-STWCR/L11	25	20	13	34	180	18	4°	TC..1102..	M2.5*7	Q08	-
S25R-STWCR/L11	31	25	15	43	200	23	2°	TC..1102..	M2.5*7	Q08	-
S32S-STWCR/L11	39	32	19	54	250	30	0°	TC..1102..	M2.5*7	Q08	-
S20Q-STWCR/L16	25	20	14.5	34	180	18	8°	TC..16T3..	M3.5*9	Q15	-
S25R-STWCR/L16	32	25	17	43	200	23	6°	TC..16T3..	M3.5*9	Q15	-
S32S-STWCR/L16	39	32	20	54	250	30	4°	TC..16T3..	M3.5*9	Q15	-
S40T-STWCR/L16	50	40	24	68	300	37	0°	TC..16T3..	M3.5*9	Q15	-
S50U-STWCR/L16	60	50	29	85	350	47	0°	TC..16T3..	M3.5*9	Q15	-
H08K-STWCR/L09	11	8	5.5	15	125	7	12°	TC..0902..	M2.2*5	Q06	-
H10K-STWCR/L11	14	10	8	17	125	9	10°	TC..1102..	M2.5*7	Q08	-
H12M-STWCR/L11	16	12	9	20	150	11	8°	TC..1102..	M2.5*7	Q08	-
H16N-STWCR/L11	20	16	11	27	160	15	6°	TC..1102..	M2.5*7	Q08	-
H20Q-STWCR/L11	25	20	13	34	180	18	4°	TC..1102..	M2.5*7	Q08	-
A08K-STWCR/L09	11	8	5.5	15	125	7	12°	TC..0902..	M2.2*5	Q06	√
A10K-STWCR/L11	14	10	8	17	125	9	10°	TC..1102..	M2.5*7	Q08	√
A12M-STWCR/L11	16	12	9	20	150	11	8°	TC..1102..	M2.5*7	Q08	√
A16N-STWCR/L11	20	16	11	27	160	15	6°	TC..1102..	M2.5*7	Q08	√
A20Q-STWCR/L11	25	20	13	34	180	18	4°	TC..1102..	M2.5*7	Q08	√
A20Q-STWCR/L16	25	20	14.5	34	180	18	8°	TC..16T3	M3.5*9	Q15	√

適用 Suitable:德克刀片 DEREK Insert

Type S

SVQ*R/L



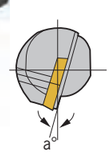

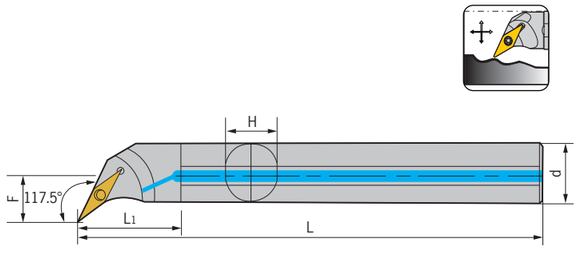

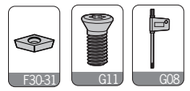



型號 Specification	最小加工径 Min dia	d	F	L1	L	H	a	刀片 Insert	螺絲 Screw	扳手 Wrench	出水孔 Water hole
S12M-SVQBR/L11	17	12	10.5	27	150	11	10°	VB..1103..	M2.5*7	Q08	-
S16N-SVQBR/L11	22	16	11.5	27	160	15	10°	VB..1103..	M2.5*7	Q08	-
S20Q-SVQBR/L11	27	20	14	34	180	18	8°	VB..1103..	M2.5*7	Q08	-
S16N-SVQCR/L11	22	16	11.5	27	160	15	8°	VC..1103..	M2.5*7	Q08	-
S20Q-SVQCR/L11	27	20	14	34	180	18	6°	VC..1103..	M2.5*7	Q08	-
S20Q-SVQBR/L16	27	20	14	34	180	18	10°	VB..1604..	M3.5*9	Q15	-
S25R-SVQBR/L16	32	25	16.5	43	200	23	8°	VB..1604..	M3.5*9	Q15	-
S32S-SVQBR/L16	41	32	22.5	54	250	30	10°	VB..1604..	M3.5*9	Q15	-
S40T-SVQBR/L16	50	40	27	68	300	37	8°	VB..1604..	M3.5*9	Q15	-
S50U-SVQBR/L16	61	50	32	85	350	47	6°	VB..1604..	M3.5*9	Q15	-
S20Q-SVQCR/L16	27	20	14	34	180	18	8°	VC..1604..	M3.5*9	Q15	-
S25R-SVQCR/L16	32	25	16.5	43	200	23	6°	VC..1604..	M3.5*9	Q15	-
S32S-SVQCR/L16	41	32	22.5	54	250	30	8°	VC..1604..	M3.5*9	Q15	-
S40T-SVQCR/L16	50	40	27	68	300	37	6°	VC..1604..	M3.5*9	Q15	-
S50U-SVQCR/L16	61	50	32	85	350	47	4°	VC..1604..	M3.5*9	Q15	-
A12M-SVQBR/L11	17	12	10	27	150	11	10°	VB..1103..	M2.5*7	Q08	√
A16N-SVQBR/L11	22	16	11.5	27	160	15	10°	VB..1103..	M2.5*7	Q08	√
A20Q-SVQBR/L11	27	20	14	34	180	18	8°	VB..1103..	M2.5*7	Q08	√
A16N-SVQCR/L11	22	16	11.5	27	160	15	8°	VC..1103..	M2.5*7	Q08	√
A20Q-SVQCR/L11	27	20	14	34	180	18	6°	VC..1103..	M2.5*7	Q08	√
A25R-SVQBR/L16	32	25	16.5	43	200	23	8°	VB..1604..	M3.5*9	Q15	√
A20Q-SVQCR/L16	27	20	14	34	180	18	8°	VC..1604..	M3.5*9	Q15	√
A25R-SVQCR/L16	32	25	16.5	43	200	23	6°	VC..1604..	M3.5*9	Q15	√

適用 Suitable:德克刀片 DEREK Insert

車刀系列 TURNING TOOLS
外圓車刀 External turning tool
內孔車刀 Internal turning tool
螺紋車刀 Threading tool
切斷&切槽車刀 Grooving tool

Type S

SVU*R/L

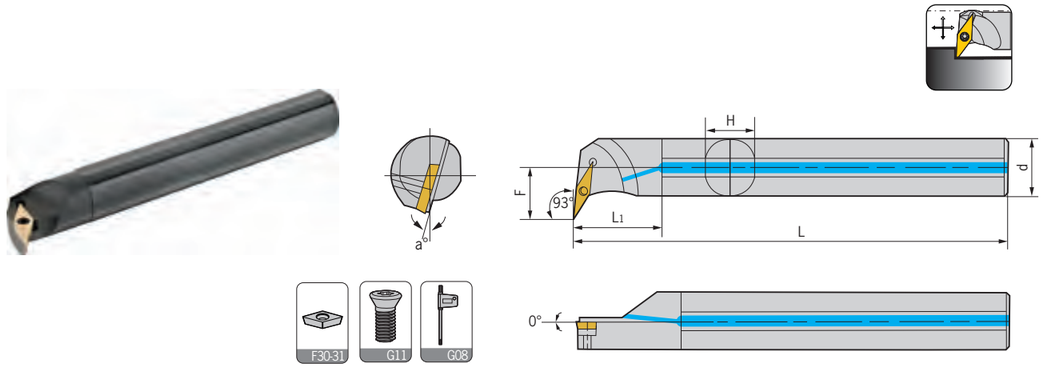

型號 Specification	最小加工径 Min dia	d	F	L1	L	H	a	刀片 Insert	螺絲 Screw	扳手 Wrench	出水孔 Water hole
S16N-SVUBR/L11	22	16	12.5	27	160	15	10°	VB..1103..	M2.5*7	Q08	-
S20Q-SVUBR/L11	27	20	14	34	180	18	8°	VB..1103..	M2.5*7	Q08	-
H16N-SVUBR/L11	22	16	11.5	27	160	15	10°	VB..1103..	M2.5*7	Q08	-
S16N-SVUCR/L11	22	16	11.5	27	160	15	10°	VC..1103..	M2.5*7	Q08	-
S20Q-SVUCR/L11	27	20	14	34	180	18	8°	VC..1103..	M2.5*7	Q08	-
H16N-SVUCR/L11	22	16	11.5	27	160	15	10°	VC..1103..	M2.5*7	Q08	-
S20Q-SVUBR/L16	31	20	19	34	180	18	8°	VB..1604..	M3.5*9	Q15	-
S25R-SVUBR/L16	35	25	20	43	200	23	6°	VB..1604..	M3.5*9	Q15	-
S32S-SVUBR/L16	42	32	22.5	54	250	30	8°	VB..1604..	M3.5*9	Q15	-
S40T-SVUBR/L16	51	40	27	68	300	37	8°	VB..1604..	M3.5*9	Q15	-
S50U-SVUBR/L16	60	50	32	85	350	47	4°	VB..1604..	M3.5*9	Q15	-
S20Q-SVUCR/L16	31	20	19	34	180	18	8°	VC..1604..	M3.5*9	Q15	-
S25R-SVUCR/L16	35	25	20	43	200	23	6°	VC..1604..	M3.5*9	Q15	-
S32S-SVUCR/L16	42	32	22.5	54	250	30	8°	VC..1604..	M3.5*9	Q15	-
S40T-SVUCR/L16	51	40	27	68	300	37	6°	VC..1604..	M3.5*9	Q15	-
S50U-SVUCR/L16	60	50	32	85	350	47	4°	VC..1604..	M3.5*9	Q15	-
A16N-SVUBR/L11	22	16	11.5	27	160	15	10°	VB..1103..	M2.5*7	Q08	√
A20Q-SVUBR/L11	27	20	14	34	180	18	8°	VB..1103..	M2.5*7	Q08	√
A16N-SVUCR/L11	22	16	11.5	27	160	15	10°	VC..1103..	M2.5*7	Q08	√
A20Q-SVUCR/L11	27	20	14	34	180	18	8°	VC..1103..	M2.5*7	Q08	√
A20Q-SVUBR/L16	31	20	19	34	180	18	8°	VB..1604..	M3.5*9	Q15	√

適用 Suitable:德克刀片 DEREK Insert

Type S

SVZ*R/L

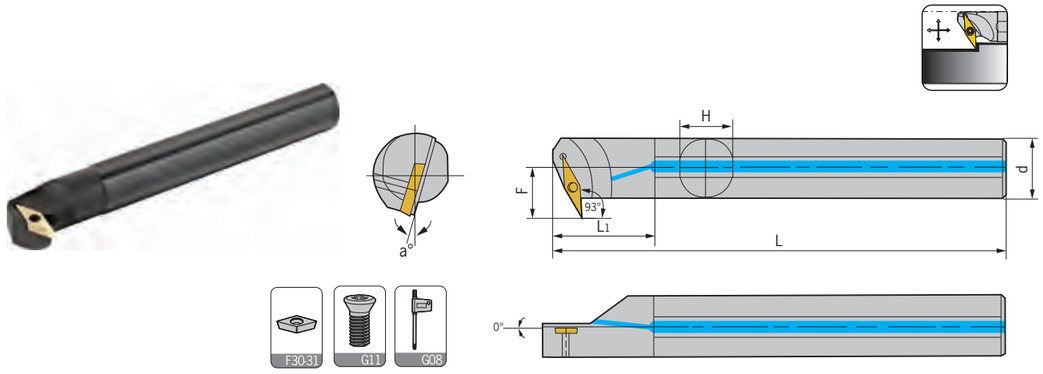

型號 Specification	最小加工径 Min dia	d	F	L1	L	H	a	刀片 Insert	螺絲 Screw	扳手 Wrench	出水孔 Water hole
S16N-SVZBR/L11	22	16	11.5	27	160	15	10°	VB..1103..	M2.5*7	Q08	-
S20Q-SVZBR/L11	27	20	14	34	180	18	8°	VB..1103..	M2.5*7	Q08	-
H16N-SVZBR/L11	22	16	11.5	27	160	15	10°	VB..1103..	M2.5*7	Q08	-
S16N-SVZCR/L11	22	16	11.5	27	160	15	10°	VC..1103..	M2.5*7	Q08	-
S20Q-SVZCR/L11	27	20	14	34	180	18	8°	VC..1103..	M2.5*7	Q08	-
H16N-SVZCR/L11	22	16	11.5	27	160	15	10°	VC..1103..	M2.5*7	Q08	-
S25R-SVZBR/L16	34	25	19.5	43	200	23	8°	VB..1604..	M3.5*9	Q15	-
S32S-SVZBR/L16	42	32	23.5	54	250	30	6°	VB..1604..	M3.5*9	Q15	-
S40T-SVZBR/L16	50	40	27	68	300	37	8°	VB..1604..	M3.5*9	Q15	-
S50U-SVZBR/L16	60	50	31.5	85	350	47	4°	VB..1604..	M3.5*9	Q15	-
S25R-SVZCR/L16	34	25	19.5	43	200	23	8°	VC..1604..	M3.5*9	Q15	-
S32S-SVZCR/L16	42	32	23.5	54	250	30	6°	VC..1604..	M3.5*9	Q15	-
S40T-SVZCR/L16	50	40	27	68	300	37	8°	VC..1604..	M3.5*9	Q15	-
S50U-SVZCR/L16	60	50	31.5	85	350	47	4°	VC..1604..	M3.5*9	Q15	-
A16N-SVZBR/L11	22	16	11.5	27	160	15	10°	VB..1103..	M2.5*7	Q08	√
A20Q-SVZBR/L11	27	20	14	34	180	18	8°	VB..1103..	M2.5*7	Q08	√
A16N-SVZCR/L11	22	16	11.5	27	160	15	10°	VC..1103..	M2.5*7	Q08	√
A20Q-SVZCR/L11	27	20	14	34	180	18	8°	VC..1103..	M2.5*7	Q08	√
A25R-SVZBR/L16	34	25	19.5	43	200	23	8°	VB..1604..	M3.5*9	Q15	√

適用 Suitable:德克刀片 DEREK Insert

Type S

SVW*R/L

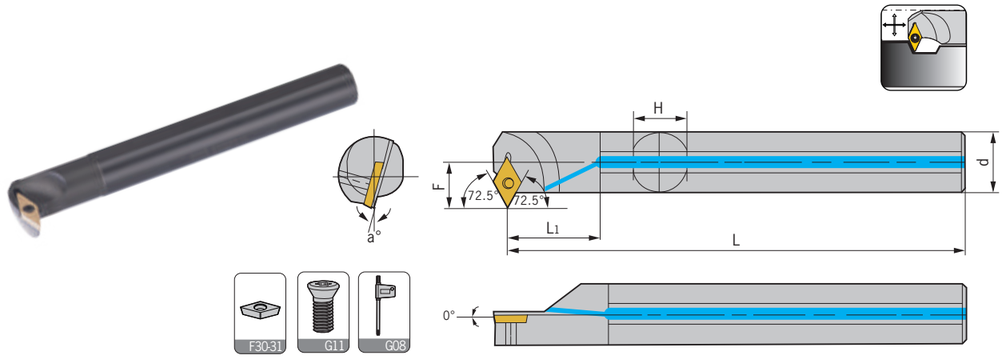

型號 Specification	最小加工径 Min dia	d	F	L	L1	H	a	刀片 Insert	中心螺絲 Center screw	扳手 Wrench
S16N-SVWBR/L11	25	16	15	160	27	15	5°	VB..1103..	M2.5*7	Q08
S20Q-SVWBR/L11	29	20	18	180	34	18	5°	VB..1103..	M2.5*7	Q08
S25R-SVWBR/L11	34	25	21	200	43	23	5°	VB..1103..	M2.5*7	Q08
S25R-SVWBR/L16	38	25	23	200	43	23	5°	VB..1604..	M3.5*9	Q15
S32S-SVWBR/L16	45	32	26	250	54	30	5°	VB..1604..	M3.5*9	Q15
S16N-SVWCR/L11	25	16	15	160	27	15	5°	VC..1103..	M2.5*7	Q08
S20Q-SVWCR/L11	19	20	18	180	34	18	5°	VC..1103..	M2.5*7	Q08
S25R-SVWCR/L11	34	25	21	200	43	23	5°	VC..1103..	M2.5*7	Q08
S25R-SVWCR/L16	38	25	23	200	43	23	5°	VC..1604..	M3.5*9	Q15
S32S-SVWCR/L16	45	32	26	250	54	30	5°	VC..1604..	M3.5*9	Q15
適用 Suitable:德克刀片 DEREK Insert										

Type S

SVX*R/L

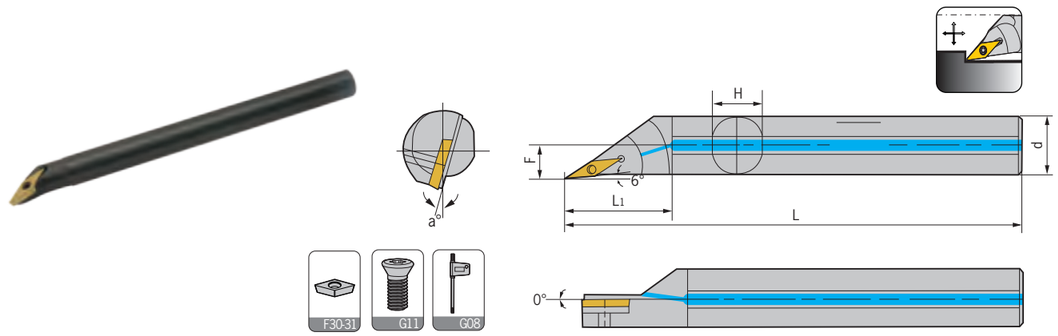

型號 Specification	最小加工径 Min dia	d	F	L1	L	H	a	刀片 Insert	螺絲 Screw	扳手 Wrench	出水孔 Water hole
S10K-SVXBR/L11-G6	14	10	7.5	17	125	9	10°	VB..1103..	M2.5*6	Q08	-
S12M-SVXBR/L11-G6	16	12	8.5	20	150	11	12°	VB..1103..	M2.5*6	Q08	-
S16N-SVXBR/L11-G6	22	16	11	27	160	15	10°	VB..1103..	M2.5*7	Q08	-
S20Q-SVXBR/L11-G6	27	20	13.5	34	180	18	8°	VB..1103..	M2.5*6	Q08	-
H10K-SVXBR/L11-G6	14	10	7.5	17	125	9	15°	VB..1103..	M2.5*6	Q08	-
H12M-SVXBR/L11-G6	16	12	8.5	20	150	11	12°	VB..1103..	M2.5*7	Q08	-
H16N-SVXBR/L11-G6	22	16	11	27	160	15	10°	VB..1103..	M2.5*7	Q08	-
S10K-SVXCR/L11-G6	14	10	7.5	17	125	9	12°	VC..1103..	M2.5*6	Q08	-
S12M-SVXCR/L11-G6	16	12	8.5	20	150	11	10°	VC..1103..	M2.5*6	Q08	-
S16N-SVXCR/L11-G6	22	16	11	27	160	15	8°	VC..1103..	M2.5*7	Q08	-
S20Q-SVXCR/L11-G6	27	20	13.5	34	180	18	6°	VC..1103..	M2.5*7	Q08	-
H10K-SVXCR/L11-G6	14	10	7.5	17	125	9	12°	VC..1103..	M2.5*6	Q08	-
H12M-SVXCR/L11-G6	16	12	8.5	20	150	11	10°	VC..1103..	M2.5*6	Q08	-
H16N-SVXCR/L11-G6	22	16	11	27	160	15	8°	VC..1103..	M2.5*7	Q08	-
S16N-SVXBR/L16-G6	22	16	11.5	27	160	15	12°	VB..1604..	M3.5*7	Q15	-
S20Q-SVXBR/L16-G6	27	20	13.5	34	180	18	10°	VB..1604..	M3.5*9	Q15	-
S25R-SVXBR/L16-G6	32	25	16	43	200	23	8°	VB..1604..	M3.5*9	Q15	-
S32S-SVXBR/L16-G6	40	32	19.5	54	250	30	8°	VB..1604..	M3.5*9	Q15	-
S40T-SVXBR/L16-G6	50	40	23.5	68	300	37	8°	VB..1604..	M3.5*9	Q15	-
S50U-SVXBR/L16-G6	60	50	28.5	85	350	47	6°	VB..1604..	M3.5*9	Q15	-
S16N-SVXCR/L16-G6	22	16	11.5	27	160	15	10°	VC..1604..	M3.5*9	Q15	-
S20Q-SVXCR/L16-G6	27	20	13.5	34	180	18	8°	VC..1604..	M3.5*9	Q15	-
S25R-SVXCR/L16-G6	32	25	16	43	200	23	6°	VC..1604..	M3.5*9	Q15	-
S32S-SVXCR/L16-G6	40	32	19.5	54	250	30	8°	VC..1604..	M3.5*9	Q15	-
S40T-SVXCR/L16-G6	50	40	23.5	68	300	37	6°	VC..1604..	M3.5*9	Q15	-
S50U-SVXCR/L16-G6	60	50	28.5	85	350	47	4°	VC..1604..	M3.5*9	Q15	-
H16N-SVXCR/L16-G6	22	16	11.5	27	160	15	10°	VC..1604..	M3.5*9	Q15	-
A10K-SVXBR/L11-G6	14	10	7.5	17	125	9	15°	VB..1103..	M2.5*6	Q08	√
A12M-SVXBR/L11-G6	16	12	8.5	20	150	11	12°	VB..1103..	M2.5*6	Q08	√
A16N-SVXBR/L11-G6	22	16	11	27	160	15	10°	VB..1103..	M2.5*7	Q08	√
A20Q-SVXBR/L11-G6	27	20	13.5	34	180	18	8°	VB..1103..	M2.5*7	Q08	√
A10K-SVXCR/L11-G6	14	10	7.5	17	125	9	12°	VC..1103..	M2.5*6	Q08	√
A12M-SVXCR/L11-G6	16	12	8.5	20	150	11	10°	VC..1103..	M2.5*6	Q08	√
A16N-SVXCR/L11-G6	22	16	11	27	160	15	8°	VC..1103..	M2.5*7	Q08	√
A20Q-SVXCR/L11-G6	27	20	13.5	34	180	18	6°	VC..1103..	M2.5*7	Q08	√
A16N-SVXBR/L16-G6	22	16	11.5	27	160	15	12°	VB..1604..	M3.5*9	Q15	√
A20Q-SVXBR/L16-G6	27	20	13.5	34	180	18	10°	VB..1604..	M3.5*9	Q15	√
A25R-SVXBR/L16-G6	32	25	16	43	200	23	8°	VB..1604..	M3.5*9	Q15	√
A16N-SVXCR/L16-G6	22	16	11.5	27	160	15	10°	VC..1604..	M3.5*7	Q15	√
A20Q-SVXCR/L16-G6	27	20	13.5	34	180	18	8°	VC..1604..	M3.5*9	Q15	√
A25R-SVXCR/L16-G6	32	25	16	43	200	23	6°	VC..1604..	M3.5*9	Q15	√
適用 Suitable:德克刀片 DEREK Insert											

Type S

SWLCR/L

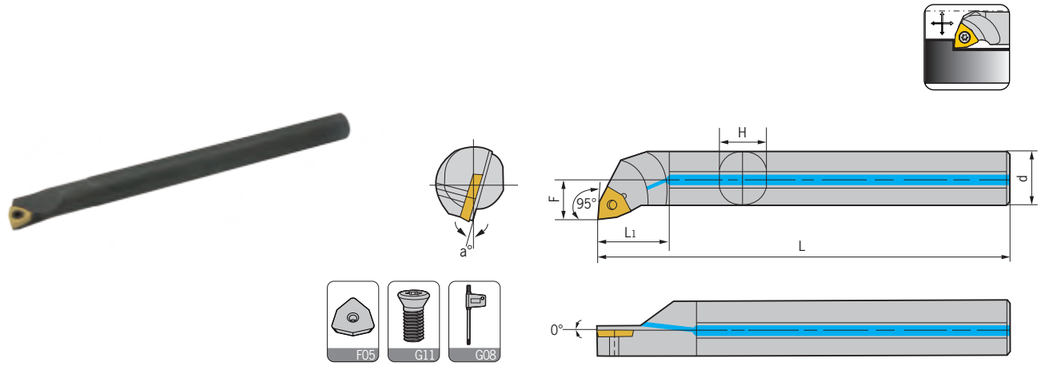

型號 Specification	最小加工径 Min dia	d	F	L1	L	H	a	刀片 Insert	螺絲 Screw	扳手 Wrench	出水孔 Water hole
S08K-SWLCR/L04	10	8	5	15	125	7	13°	WC..0402..	M2.5*5	Q08	-
S10K-SWLCR/L04	13	10	10	17	125	9	10°	WC..0402..	M2.5*6	Q08	-
S12M-SWLCR/L06	16	12	6.5	20	150	11	13°	WC..06T3..	M3.5*8	Q15	-
S16N-SWLCR/L06	20	16	7.5	27	160	15	10°	WC..06T3..	M3.5*8	Q15	-
S20Q-SWLCR/L06	25	20	9.5	34	180	18	8°	WC..06T3..	M3.5*9	Q15	-
S25R-SWLCR/L06	31	25	11.5	43	200	23	6°	WC..06T3..	M3.5*9	Q15	-
H08K-SWLCR/L04	10	8	4	15	125	7	13°	WC..0402..	M2.5*5	Q08	-
H10K-SWLCR/L04	13	10	5	17	125	9	10°	WC..0402..	M2.5*6	Q08	-
H12M-SWLCR/L06	16	12	6.5	20	150	11	13°	WC..06T3..	M3.5*8	Q15	-
H16N-SWLCR/L06	20	16	7.5	27	160	15	10°	WC..06T3..	M3.5*8	Q15	-
A08K-SWLCR/L04	10	8	5	15	125	7	13°	WC..0402..	M2.5*5	Q08	√
A10K-SWLCR/L04	13	10	10	17	125	9	10°	WC..0402..	M2.5*6	Q08	√
A12M-SWLCR/L06	16	12	6.5	20	150	11	13°	WC..06T3..	M3.5*8	Q15	√
A16N-SWLCR/L06	20	16	7.5	27	160	15	10°	WC..06T3..	M3.5*8	Q15	√
A20Q-SWLCR/L06	25	20	9.5	34	180	18	8°	WC..06T3..	M3.5*8	Q15	√

適用 Suitable:德克刀片 DEREK Insert

Type S

SWUBR/L

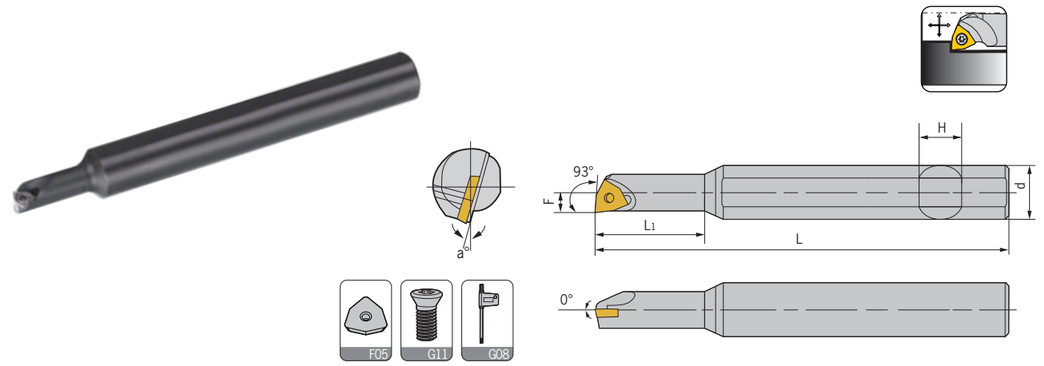

型號 Specification	最小加工径 Min dia	d	F	L	L1	H	a	刀片 Insert	中心螺絲 Center screw	扳手 Wrench
S05H-SWUBR/L06-A08	6	8	3.1	100	13.5	7	12°	WBGT060104L-W11	M2*4	Q06
S05H-SWUBR/L06-A12	6	12	3.1	100	13.5	11	12°	WBGT060104L-W11	M2*4	Q06
S06H-SWUBR/L06-A12	7	12	3.6	100	16.0	11	15°	WBGT060104L-W11	M2*4	Q06
S07H-SWUBR/L06-A12	8	12	4.0	100	18.0	11	15°	WBGT060104L-W11	M2*4	Q06
H05H-SWUBR/L06-A08	6	8	3.1	100	17.5	7	12°	WBGT060104L-W11	M2*4	Q06
H05H-SWUBR/L06-A12	6	12	3.1	100	17.5	11	12°	WBGT060104L-W11	M2*4	Q06
H06H-SWUBR/L06-A12	7	12	3.6	100	21.0	11	15°	WBGT060104L-W11	M2*4	Q06
H07H-SWUBR/L06-A12	8	12	4.0	100	24.5	11	15°	WBGT060104L-W11	M2*4	Q06

適用 Suitable:德克刀片 DEREK Insert

車刀系列 TURNING TOOLS
外圓車刀 External turning tool
內孔車刀 Internal turning tool
螺紋車刀 Threading tool
切斷&切槽車刀 Grooving tool

Type S

SER/L





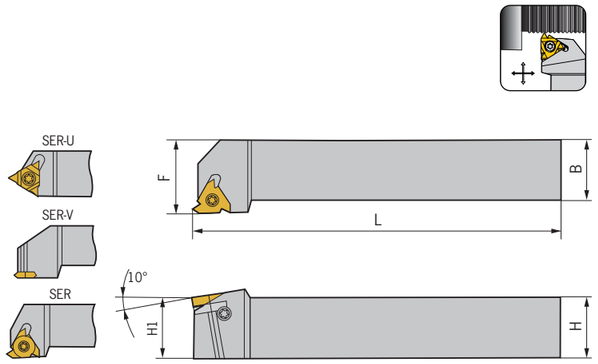

型號 Specification		H	B	L	H1	F	刀片 Insert	刀墊 Knives cushion	刀墊螺絲 Knives cushion screw	側螺絲 Side screw	扳手 Wrench
SER/L	1010H11	10	10	100	10	12	11ER/L..	-	M2.5*7	-	Q08
	1212H16	12	12	100	12	16	16ER/L..	-	M3.5*7	-	Q15
	1616H16	16	16	100	16	20	16ER/L..	YE(I)16	M3.5*12	SA3007	Q15,Q10
	2020K16	20	20	125	20	25	16ER/L..	YE(I)16	M3.5*12	SA3007	Q15,Q10
	2525M16	25	25	150	25	32	16ER/L..	YE(I)16	M3.5*12	SA3007	Q15,Q10
	3232P16	32	32	170	32	40	16ER/L..	YE(I)16	M3.5*12	SA3007	Q15,Q10
	2525M22	25	25	150	25	32	22ER/L..	YE22(R)	M4*14	SA3007	Q15,Q10
	3232P22	32	32	170	32	40	22ER/L..	YI22(L)	M4*14	SA3007	Q15,Q10
	2525M27	25	25	150	25	32	27ER/L..	YE27(R)	M5*16	SA3007	Q20,Q10
	3232P27	32	32	170	32	40	27ER/L..	YI27(L)	M5*16	SA3007	Q20,Q10
	2525M22U	25	25	150	25	25	22UER/L..	YE22U(R)	M4*14	SA3007	Q15,Q10
	3232P22U	32	32	170	32	32	22UER/L..	YI22U(L)	M4*14	SA3007	Q15,Q10
	2525M27U	25	25	150	25	25	27UER/L..	YE27U(R)	M5*16	SA3007	Q20,Q10
	3232P27U	32	32	170	32	32	27UER/L..	YI27U(L)	M5*16	SA3007	Q20,Q10
	2020K16V	20	20	125	20	25	16VER..	-	M3.5*9	-	Q15
	2525M16V	25	25	150	25	32	16VER..	-	M3.5*9	-	Q15
	2020K22V	20	20	125	20	25	22VER..	-	M4*9	-	Q15
	2525M22V	25	25	150	25	32	22VER..	-	M4*9	-	Q15

適用 Suitable:德克刀片 DEREK Insert

Type S

SIR/L



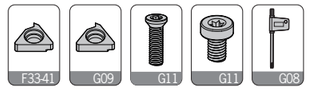

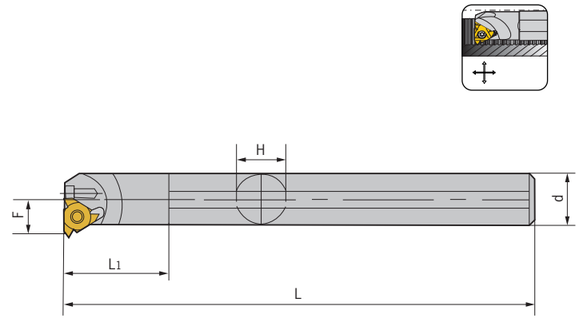

型號 Specification		最小加工径 Min dia	d	F	L	L1	H	刀片 Insert	刀墊 Knives cushion	螺絲 screw	側螺絲 Side screw	扳手 Wrench
SIR	0005K06-A12	6	12	4.3	125	13.5	11	06IR/L..	-	M2*4	-	Q06
	0006K06-A12	7.5	12	4.8	125	16	11	06IR/L..	-	M2*4	-	Q06
	0007K08	10	8	5.3	125	12	7	08IR/L..	-	M2.2*6	-	Q06
	0007K08-A16	10	16	5.3	125	18.5	15	08IR/L..	-	M2.2*6	-	Q06
	0008K08	11	8	6.6	125	14	7	08IR/L..	-	M2.2*6	-	Q06
	0008K08-A16	15	16	5.8	125	21	15	08IR/L..	-	M2.2*6	-	Q06
	0008K11	11	8	6.6	125	14	7	11IR/L..	-	M2.5*7	-	Q08
	0010K11	12	10	7.4	125	17	9	11IR/L..	-	M2.5*7	-	Q08
	0010K11-A16	12	16	7.4	125	26	15	11IR/L..	-	M2.5*7	-	Q08
	0012K11	15	12	8.4	125	25	11	11IR/L..	-	M2.5*7	-	Q08
	0012K11-A16	15	16	8.4	125	31	15	11IR/L..	-	M2.5*7	-	Q08
	0013M16	16	16	10.2	150	22	15	16IR/L..	-	M3.5*9	-	Q15
	0013M16-A16	16	16	10	150	33.5	15	16IR/L..	-	M3.5*9	-	Q15
	0016M16	19	16	11.7	150	27	15	16IR/L..	-	M3.5*9	-	Q15
	0020Q16	24	20	13.7	180	34	18	16IR/L..	YE(I)16	M3.5*9	SA3007	Q15,Q10
	0020Q16-W	24	20	14	180	34	18	16IR/L..	-	M3.5*12	-	Q15
	0025Q16	29	25	16.2	200	43	23	16IR/L..	YE(I)16	M3.5*12	SA3007	Q15,Q10
	0025Q16-W	29	25	16	200	43	23	16IR/L..	-	M3.5*12	-	Q15
	0032S16	36	32	19.7	250	54	30	16IR/L..	YE(I)16	M3.5*12	SA3007	Q15,Q10
	0040T16	44	40	23.7	322	68	37	16IR/L..	YE(I)16	M3.5*12	SA3007	Q15,Q10
	0050U16	54	50	28.7	350	85	47	16IR/L..	YE(I)16	M3.5*12	SA3007	Q15,Q10
	0020Q22	24	20	15.6	180	34	18	22IR/L..	YI22(R) YE22(L)	M4*9	-	Q15
	0025R22	29	25	18.1	200	43	23	22IR/L..		M4*15	SA3007	Q15,Q10
	0032S22	38	32	21.6	250	54	30	22IR/L..	YI22(R) YE22(L)	M4*15	SA3007	Q15,Q10
	0040T22	46	40	25.6	300	68	37	22IR/L..		M4*15	SA3007	Q15,Q10
	0050U22	56	50	30.6	350	85	47	22IR/L..		M4*15	SA3007	Q15,Q10
	0032S27	40	32	22.6	250	54	30	27IR/L..	YI27(R) YE27(L)	M5*18	SA3007	Q15,Q10
	0040T27	48	40	26.6	300	68	37	27IR/L..		M5*18	SA3007	Q15,Q10
	0050U27	58	50	31.6	350	85	47	27IR/L..		M5*18	SA3007	Q15,Q10
	0032S22U	38	32	24.4	250	54	30	22UIR/L..	YI22U(R) YE22U(L	M4*15	SA3007	Q15,Q10
	0040T22U	46	40	28.1	300	68	37	22UIR/L..		M4*15	SA3007	Q15,Q10
	0032S27U	40	32	22.6	250	54	30	27UIR/L..	YI27U(R) YE27U(L	M5*18	SA3007	Q15,Q10
	0040T27U	48	40	26.6	300	68	37	27UIR/L..		M5*18	SA3007	Q15,Q10
	0050U27U	58	50	31.6	350	85	47	27UIR/L..		M5*18	SA3007	Q15,Q10

適用 Suitable:德克刀片 DEREK Insert

Type G

GT*R/L





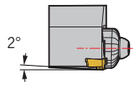

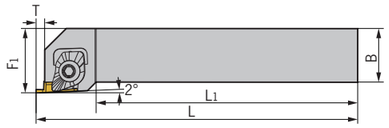





	型號 Specification	最大切深T	H	B	L	F	刀片 Insert	壓板 Clamp	壓板螺絲 Clamp screw	刀片螺絲 Insert screw	彈簧 Spring	扳手 Wrench
GTBR/L	**1616H16**	2.5	16	16	100	20	TGF16R/L	GYR	B0620	M3.5*7	SP-0612	L045,Q15
	2020K16	2.5	20	20	125	25	TGF16R/L	GYR	B0620	M3.5*7	SP-0612	L045,Q15
	2525M16	2.5	25	25	150	30	TGF16R/L	GYR	B0620	M5*12	SP-0612	L045,Q20
	2020K22-15	4	20	20	125	25	TGF22R/L	GYR	B0620	M5*12	SP-0612	L045,Q20
	2525M22-15	4	25	25	150	30	TGF22R/L	GYR	B0620	M5*12	SP-0612	L045,Q20
	2020K22-25	4.5	20	20	125	25	TGF22R/L	GYR	B0620	M5*12	SP-0612	L045,Q20
	2525M22-25	4.5	25	25	150	30	TGF22R/L	GYR	B0620	M5*12	SP-0612	L045,Q20
	2020K22-35	5.5	20	20	125	25	TGF22R/L	GYR	B0620	M5*12	SP-0612	L045,Q20
	2525M22-35	5.5	25	25	150	30	TGF22R/L	GYR	B0620	M5*12	SP-0612	L045,Q20

適用 Suitable:德克刀片 DEREK Insert

Type G

GT*R/L-L



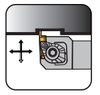









	型號 Specification	最大切深T	H	B	L	F	刀片 Insert	壓板 Clamp	壓板螺絲 Clamp screw	刀片螺絲 Insert screw	彈簧 Spring	扳手 Wrench
GTBR/L	**1616H16L**	2.5	16	16	100	20	TGF16R/L	GYL	B0620	M3.5*7	SP-0612	L045,Q15
	2020K16L	2.5	20	20	125	25	TGF16R/L	GYL	B0620	M3.5*7	SP-0612	L045,Q15
	2525M16L	2.5	25	25	150	30	TGF16R/L	GYL	B0620	M3.5*7	SP-0612	L045,Q15
	2020K22-15L	4	20	20	125	27	TGF22R/L	GYL	B0620	M5*12	SP-0612	L045,Q20
	2525M22-15L	4	25	25	150	32	TGF22R/L	GYL	B0620	M5*12	SP-0612	L045,Q20
	2020K22-25L	4.5	20	20	125	27	TGF22R/L	GYL	B0620	M5*12	SP-0612	L045,Q20
	2525M22-25L	4.5	25	25	150	32	TGF22R/L	GYL	B0620	M5*12	SP-0612	L045,Q20
	2020K22-35L	5.5	20	20	125	27	TGF22R/L	GYL	B0620	M5*12	SP-0612	L045,Q20
	2525M22-35L	5.5	25	25	150	32	TGF22R/L	GYL	B0620	M5*12	SP-0612	L045,Q20

適用 Suitable:德克刀片 DEREK Insert

Type K/M

KTGR/L



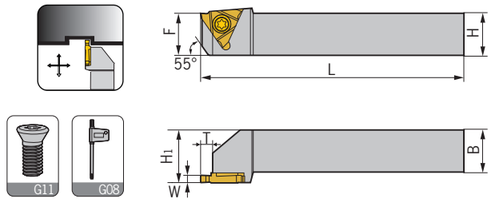

型號 Specification		最大 切深T	H	B	L	F	W	刀片 Insert	螺絲 Screw	扳手 Wrench
KTGR/L	1616H16	2.3	16	16	100	21	2	VE32R200	M3.5*9	Q10
	2020K16	2.3	20	20	125	25	2	VE32R200	M3.5*9	Q10
	2525M16	2.5	25	25	150	30	2	VE32R200	M3.5*9	Q10

適用 Suitable:京瓷刀片 KYOCERA Insert

KTGFR/L



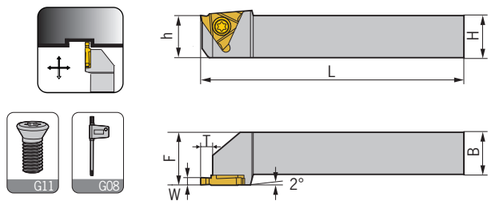

型號 Specification		最大 切深T	H	B	L	F	W	刀片 Insert	螺絲 Screw	扳手 Wrench
KTGFR/L	1616H16	2.3	16	16	100	21	2	VER32R/L...	M3.5*9	Q10
	2020K16	2.3	20	20	125	25	2	VER32R/L...	M3.5*9	Q10
	2525M16	2.5	25	25	150	30	2	VER32R/L...	M3.5*9	Q10

適用 Suitable:京瓷刀片 KYOCERA Insert

Type M

MGEVR/L

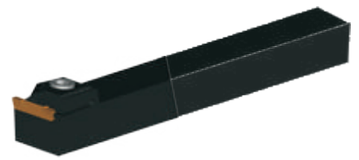

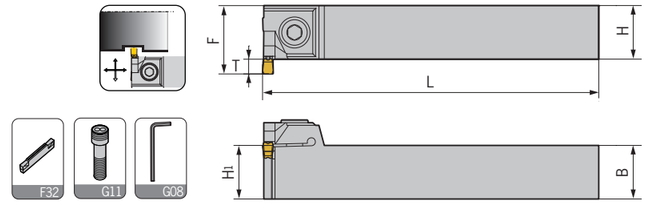

型號 Specification		最大 切深T	H	B	L	F	刀片 Insert	螺絲 Screw	扳手 Wrench
MGEVR/L	2020-2	3.6	20	20	125	24	MGMN200-G	GS050160	L04
	2020-3	5.5	20	20	125	26	MGMN300-M	GS060200	L05
	2020-4	5.5	20	20	125	26	MGMN400-M	GS060200	L05

適用 Suitable:德克刀片 DEREK Insert

MGEHR/L



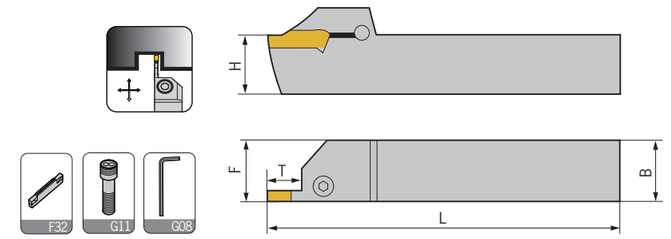

型號 Specification		最大 切深T	H	B	L	F	刀片 Insert	螺絲 Screw	扳手 Wrench
MGEHR/L	1616-1.5	14.5	16	16	100	16.25	MGMN150-G	GS050160	L04
	2020-1.5	14.5	20	20	125	20.25	MGMN150-G	GS050160	L04
	2525-1.5	14.5	25	25	150	25.25	MGMN150-G	GS050160	L04
	1212-2	14.5	12	12	100	12.25	MGMN200-G MGMN200-M MGMN200-□□	GS050160	L04
	1616-2	14.5	16	16	100	16.25		GS050160	L04
	2020-2	14.5	20	20	125	20.25		GS050160	L04
	2525-2	14.5	25	25	150	25.25		GS050160	L04
	1616-2.5	16.5	16	16	100	16.3	MGMN250-G MGMN250-M	GS050160	L04
	2020-2.5	16.5	20	20	125	20.3		GS050160	L04
	2525-2.5	16.5	25	25	150	25.3		GS050160	L04
	1616-3	18.5	16	16	100	16.35	MGMN300-M MGMN300-□□M MRMN300-M MGMR300-□□M	GS060160	L05
	2020-3	18	20	20	125	20.4		GS060200	L05
	2020-3-T10	10	20	20	125	20.4		GS060200	L05
	2525-3	18	25	25	150	25.4		GS060250	L05
	2525-3-T10	10	25	25	150	25.4		GS060250	L05
	3232-3	18	32	32	170	32.4		GS060250	L05
	3232-3-T10	10	32	32	170	32.4		GS060250	L05

轉下頁
See next page

Type M

MGEHR/L



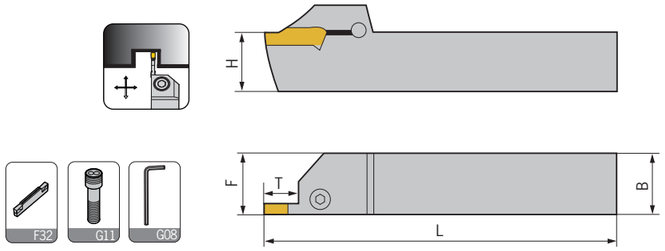

型號 Specification		最大 切深T	H	B	L	F	刀片 Insert	螺絲 Screw	扳手 Wrench
MGEHR/L	**2020-4**	18	20	20	125	20.4	MGMN400-M MGMN400-□□M MRMN400-M MGMR400-□□M	GS060200	L05
	2020-4-T10	10	20	20	125	20.4		GS060200	L05
	2525-4	18	25	25	150	25.4		GS060250	L05
	2525-4-T10	10	25	25	150	25.4		GS060250	L05
	3232-4	18	32	32	170	32.4		GS060250	L05
	3232-4-T10	10	32	32	170	32.4		GS060250	L05
	2020-5	23	20	20	150	20.5	MGMN500-M MGMN500-□□M MRMN500-M MGMR500-□□M	GS060200	L05
	2020-5-T15	15	20	20	150	20.5		GS060200	L05
	2525-5	23	25	25	150	25.5		GS060250	L05
	2525-5-T15	15	25	25	150	25.5		GS060250	L05
	3232-5	23	32	32	170	32.5		GS060250	L05
	3232-5-T15	15	32	32	170	32.5		GS060250	L05
	2020-6	23	20	20	125	20.6	MGMN600-M MGGN600-□□M MRMN600-M	GS060200	L05
	2020-6-T15	15	20	20	125	20.6		GS060200	L05
	2525-6	23	25	25	150	25.6		GS060250	L05
	2525-6-T15	15	25	25	150	25.6		GS060250	L05
	3232-6	23	32	32	170	32.6		GS060250	L05
	3232-6-T15	15	32	32	170	32.6		GS060250	L05
	2525-8	28	25	25	150	26.1	MRMN800-M	GS060250	L05
	2525-5-T15	15	25	25	150	26.1	MRMN800-M	GS060250	L05
	3232-8	28	32	32	170	33.1	MRMN800-M	GS060250	L05
	3232-8-T15	16	32	32	170	33.1	MRMN800-M	GS060250	L05
	2525-6A	23	25	25	150	25.6	MRGN600-A	GS060250	L05
	2525-6A-T15	15	25	25	150	25.6	MRGN600-A	GS060250	L05
	3232-6A	23	32	32	170	32.6	MRGN600-A	GS060250	L05
	3232-6A-T15	15	32	32	170	32.6	MRGN600-A	GS060250	L05
	2525-8A	28	25	25	150	26.1	MRGN800-A	GS060250	L05
	2525-8A-T15	16	25	25	150	26.1	MRGN800-A	GS060250	L05
	3232-8A	28	32	32	170	33.1	MRGN800-A	GS060250	L05
	3232-8A-T15	15	32	32	170	33.1	MRGN800-A	GS060250	L05

適用 Suitable:德克刀片 DEREK Insert

Type M

MGFVR/L



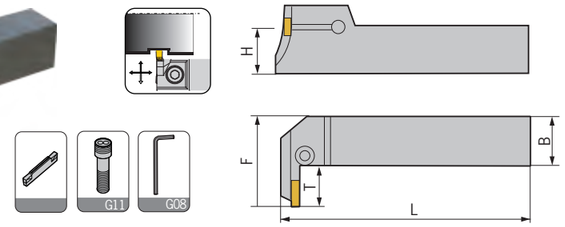

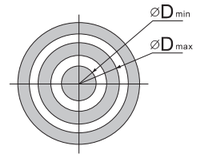

下刀直徑範圍

型號 Specification		D (min-max)	最大 切深T	H	B	L	F	刀片 Insert	螺絲 Screw	扳手 Wrench
MGFVR/L	**325-24/35-T10**	24-35	10	25	25	150	18	MFMN300	GS060200	L05
	325-29/40-T10	29-40	10	25	25	150	18	MFMN300	GS060200	L05
	325-34/50-T10	34-50	10	25	25	150	18	MFMN300	GS060200	L05
	425-44/60-T10	44-60	10	25	25	150	25	MGMN400-N	GS060200	L05

適用 Suitable:德克刀片 DEREK Insert

MGFHRR



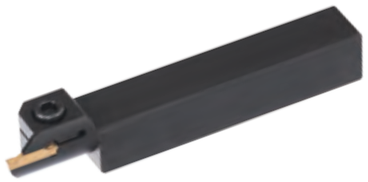

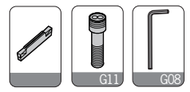

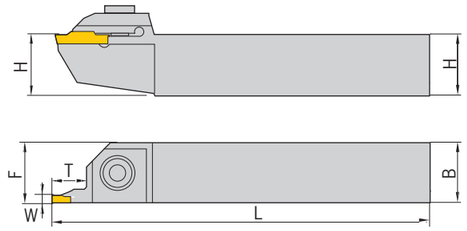

型號 Specification		D (min-max)	最大 切深T	H	h	B	L	F	W	刀片 Insert	中心螺絲 Center screw	扳手 Wrench
MGFHRR	**320-24/35-T10**	24-35	10	20	20	20	125	20.6	3	MFMN300	GS060200	L05
	320-29/40-T10	29-40	10	20	20	20	125	20.6	3	MFMN300	GS060200	L05
	320-34/50-T10	34-50	10	20	20	20	125	20.6	3	MFMN300	GS060200	L05
	320-44/70-T10	44-70	10	20	20	20	125	20.6	3	MFMN300	GS060200	L05
	320-64/90-T10	64-90	10	20	20	20	125	20.6	3	MFMN300	GS060200	L05
	420-62/120-T15	62-120	15	20	20	20	125	20.6	4	MGMN400-M	GS060200	L05
	420-112/200-T15	112-200	15	20	20	20	125	20.6	4	MGMN400-M	GS060200	L05
	325-24/35-T10	24-35	10	25	25	25	150	25.6	3	MFMN300	GS060200	L05
	325-29/40-T10	29-40	10	25	25	25	150	25.6	3	MFMN300	GS060200	L05
	325-34/50-T10	34-50	10	25	25	25	150	25.6	3	MFMN300	GS060200	L05
	325-44/70-T10	44-70	10	25	25	25	150	25.6	3	MFMN300	GS060200	L05
	325-64/90-T10	64-90	10	25	25	25	150	25.6	3	MFMN300	GS060200	L05
	425-62/120-T15	62-120	15	25	25	25	150	25.6	4	MGMN400-M	GS060200	L05
	425-112/200-T15	112-200	15	25	25	25	150	25.6	4	MGMN400-M	GS060200	L05

適用 Suitable:德克刀片 DEREK Insert

Type M

MGFHRL



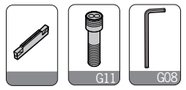

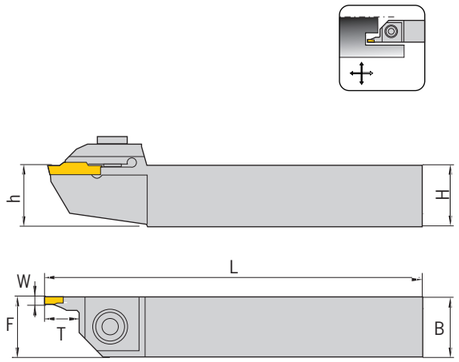

型號 Specification		D (min-max)	最大切深T	H	B	L	F	W	刀片 Insert	中心螺絲 Center screw	扳手 Wrench
MGFHRL	**320-24/35-T10**	24-35	10	20	20	125	20.6	3	MFMN300	GS060200	L05
	320-29/40-T10	29-40	10	20	20	125	20.6	3	MFMN300	GS060200	L05
	320-34/50-T10	34-50	10	20	20	125	20.6	3	MFMN300	GS060200	L05
	320-44/70-T10	44-70	10	20	20	125	20.6	3	MFMN300	GS060200	L05
	320-64/99-T10	64-90	10	20	20	125	20.6	3	MFMN300	GS060200	L05
	420-62/120-T15	62-120	15	20	20	125	20.6	4	MGMN400-M	GS060200	L05
	420-112/200-T15	112-200	15	20	20	125	20.6	4	MGMN400-M	GS060200	L05
	325-24/35-T10	24-35	10	25	25	150	25.6	3	MFMN300	GS060200	L05
	325-29/40-T10	29-40	10	25	25	150	25.6	3	MFMN300	GS060200	L05
	325-34/50-T10	34-50	10	25	25	150	25.6	3	MFMN300	GS060200	L05
	325-44/70-T10	44-70	10	25	25	150	25.6	3	MFMN300	GS060200	L05
	325-64/99-T10	64-90	10	25	25	150	25.6	3	MFMN300	GS060200	L05
	425-62/120-T15	62-120	15	25	25	150	25.6	4	MGMN400-M	GS060200	L05
	425-112/200-T15	112-200	15	25	25	150	25.6	4	MGMN400-M	GS060200	L05

適用 Suitable:德克刀片 DEREK Insert

Type M

MGFHLR



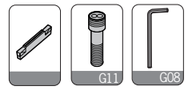

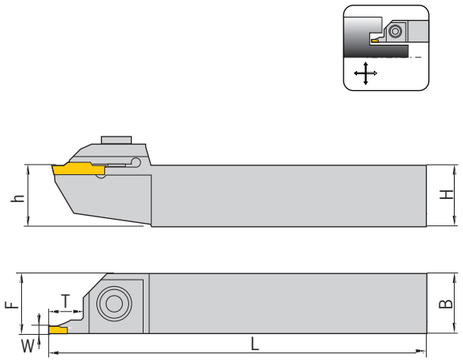

型號 Specification		D (min-max)	最大切深T	H	B	L	F	W	刀片 Insert	中心螺絲 Center screw	扳手 Wrench
MGFHLR	**320-24/35-T10**	24-35	10	20	20	125	20.6	3	MFMN300	GS060200	L05
	320-29/40-T10	29-40	10	20	20	125	20.6	3	MFMN300	GS060200	L05
	320-34/50-T10	34-50	10	20	20	125	20.6	3	MFMN300	GS060200	L05
	320-44/70-T10	44-70	10	20	20	125	20.6	3	MFMN300	GS060200	L05
	320-64/90-T10	64-90	10	20	20	125	20.6	3	MFMN300	GS060200	L05
	420-62/120-T15	62-120	15	20	20	125	20.6	4	MGMN400-M	GS060200	L05
	420-112/200-T15	112-200	15	20	20	125	20.6	4	MGMN400-M	GS060200	L05
	325-24/35-T10	24-35	10	25	25	150	25.6	3	MFMN300	GS060200	L05
	325-29/40-T10	29-40	10	25	25	150	25.6	3	MFMN300	GS060200	L05
	325-34/50-T10	34-50	10	25	25	150	25.6	3	MFMN300	GS060200	L05
	325-44/70-T10	44-70	10	25	25	150	25.6	3	MFMN300	GS060200	L05
	325-64/90-T10	64-90	10	25	25	150	25.6	3	MFMN300	GS060200	L05
	425-62/120-T15	62-120	15	25	25	150	25.6	4	MGMN400-M	GS060200	L05
	425-112/200-T15	112-200	15	25	25	150	25.6	4	MGMN400-M	GS060200	L05

適用 Suitable:德克刀片 DEREK Insert

Type M

MGFHLL



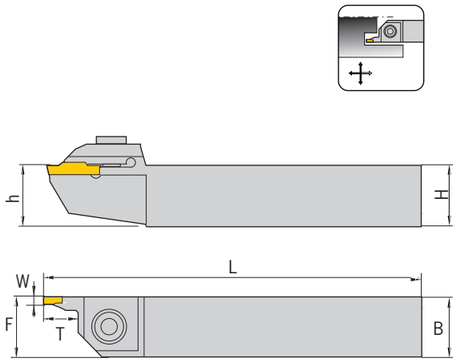

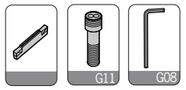

型號 Specification		D (min-max)	最大 切深T	H	B	L	F	W	刀片 Insert	中心螺絲 Center screw	扳手 Wrench
MGFHLL	**320-24/35-T10**	24-35	10	20	20	125	20.6	3	MFMN300	GS060200	L05
	320-29/40-T10	29-40	10	20	20	125	20.6	3	MFMN300	GS060200	L05
	320-34/50-T10	34-50	10	20	20	125	20.6	3	MFMN300	GS060200	L05
	320-44/70-T10	44-70	10	20	20	125	20.6	3	MFMN300	GS060200	L05
	320-64/99-T10	64-90	10	20	20	125	20.6	3	MFMN300	GS060200	L05
	420-62/120-T15	62-120	15	20	20	125	20.6	4	MGMN400-M	GS060200	L05
	420-112/200-T15	112-200	15	20	20	125	20.6	4	MGMN400-M	GS060200	L05
	325-24/35-T10	24-35	10	25	25	150	25.6	3	MFMN300	GS060200	L05
	325-29/40-T10	29-40	10	25	25	150	25.6	3	MFMN300	GS060200	L05
	325-34/50-T10	34-50	10	25	25	150	25.6	3	MFMN300	GS060200	L05
	325-44/70-T10	44-70	10	25	25	150	25.6	3	MFMN300	GS060200	L05
	325-64/99-T10	64-90	10	25	25	150	25.6	3	MFMN300	GS060200	L05
	425-62/120-T15	62-120	15	25	25	150	25.6	4	MGMN400-M	GS060200	L05
	425-112/200-T15	112-200	15	25	25	150	25.6	4	MGMN400-M	GS060200	L05

適用 Suitable:德克刀片 DEREK Insert

Type M

MGIVR/L





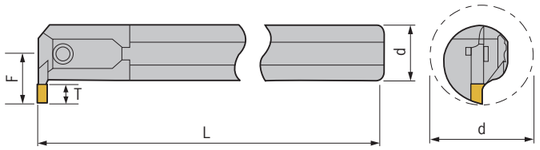

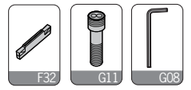

型號 Specification		最小 加工徑	最大 切深T	d	L	F	刀片 Insert	螺絲 Screw	扳手 Wrench
MGIVR/L	**2016-1.5**	20	4	16	125	11.3	MGMN150-G	GS030100	L025
	2520-1.5	25	4	20	150	13.1	MGMN150-G	GS050120	L04
	2925-1.5	29	4	25	200	16.2	MGMN150-G	GS050120	L04
	2016-2	20	5	16	125	12.4	MGMN200-G	GS030100	L025
	2520-2	25	5	20	150	14	MGMN200-M	GS050120	L04
	2925-2	29	5	25	200	17.2	MRMN200-M	GS050120	L04
	2016-2.5	20	6	16	125	12.5	MGMN250-G	GS030100	L025
	2520-2.5	25	6	20	150	15.1	MGMN250-M	GS050160	L04
	2925-2.5	29	6	25	200	18.2		GS050160	L04
	2520-3	25	6	20	150	15.6	MGMN300-M/G	GS050120	L04
	3125-3	31	6	25	200	18.9	MGGN300-□□M	GS050160	L04
	3732-3	37	6	32	250	21.5	MRMN300-M	GS050160	L04
	2520-4	25	6	20	150	15.6	MGMN400-M/G	GS050120	L04
	3125-4	31	6	25	200	18.9	MGGN400-□□M	GS050120	L04
	3732-4	37	6	32	250	21.5	MRMN400-M	GS050120	L04
	3125-5	31	8	25	200	19.4	MGMN500-M/G	GS060200	L05
	3732-5	37	8	32	250	21.5	MGGN500-□□M MRMN500-M	GS060200	L05
	3725-6	31	8	25	200	19.4	MGMN600-M/G	GS060200	L05
	3732-6	37	8	32	250	21.5	MGGN600-□□M MRMN600-M	GS060200	L05
	3732-8	37	10	32	250	23.4	MRMN800-M	GS060200	L05
	4540-8	45	10	40	300	27.2	MGMN800-M	GS060200	L05
	3125-6A	31	8	25	200	19.4	MRGN600-A	GS060200	L05
	3732-6A	37	8	32	250	21.5	MRGN600-A	GS060200	L05
	3732-8A	37	10	32	250	23.4	MRGN800-A	GS060200	L05
	4540-8A	45	10	40	300	27.2	MRGN800-A	GS060200	L05

適用 Suitable:德克刀片 DEREK Insert

Type Q

QE*DR/L



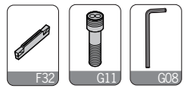

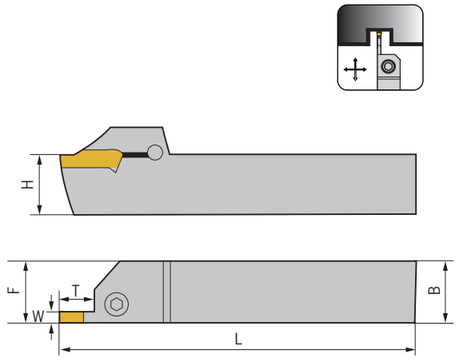

型號 Specification		最大 切深T	H	B	L	F	W	刀片 Insert	螺絲 Screw	扳手 Wrench
QEED	1616R/L10	10	16	16	125	16.3	2.5	Z*ED****-**	GS050160	L04
	1616R/L17	17	16	16	125	16.3	2.5	Z*ED****-**	GS050160	L04
	2020R/L10	10	20	20	125	20.3	2.5	Z*ED****-**	GS060200	L05
	2020R/L17	17	20	20	125	20.3	2.5	Z*ED****-**	GS060200	L05
	2525R/L10	10	25	25	150	25.3	2.5	Z*ED****-**	GS060250	L05
	2525R/L17	17	25	25	150	25.3	2.5	Z*ED****-**	GS060250	L05
QEFD	1616R/L10	10	16	16	125	16.3	3	Z*FD****-**	GS050160	L04
	1616R/L17	17	16	16	125	16.3	3	Z*FD****-**	GS050160	L04
	2020R/L10	10	20	20	125	20.3	3	Z*FD****-**	GS060200	L05
	2020R/L17	17	20	20	125	20.3	3	Z*FD****-**	GS060200	L05
	2525R/L10	10	25	25	150	25.3	3	Z*FD****-**	GS060250	L05
	2525R/L17	17	25	25	150	25.3	3	Z*FD****-**	GS060250	L05
QEGD	2020R/L13	13	20	20	125	20.5	4	Z*GD****-**	GS060200	L05
	2020R/L22	22	20	20	125	20.5	4	Z*GD****-**	GS060200	L05
	2525R/L13	13	25	25	150	25.5	4	Z*GD****-**	GS060250	L05
	2525R/L22	22	25	25	150	25.5	4	Z*GD****-**	GS060250	L05
	3232R/L13	13	32	32	170	32.5	4	Z*GD****-**	GS060250	L05
	3232R/L22	22	32	32	170	32.5	4	Z*GD****-**	GS060250	L05
QEHD	2525R/L13	13	25	25	150	25.5	5	Z*HD****-**	GS060250	L05
	2525R/L22	22	25	25	150	25.5	5	Z*HD****-**	GS060250	L05
	3232R/L13	13	32	32	170	32.5	5	Z*HD****-**	GS060250	L05
	3232R/L22	22	32	32	170	32.5	5	Z*HD****-**	GS060250	L05
QEKD	2525R/L13	13	25	25	150	25.6	6	Z*KD****-**	GS060250	L05
	2525R/L22	22	25	25	150	25.6	6	Z*KD****-**	GS060250	L05
	3232R/L13	13	32	32	170	32.6	6	Z*KD****-**	GS060250	L05
	3232R/L22	22	32	32	170	32.6	6	Z*KD****-**	GS060250	L05

適用 Suitable:德克刀片 DEREK Insert

Type Q

QF*D**LL**



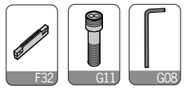

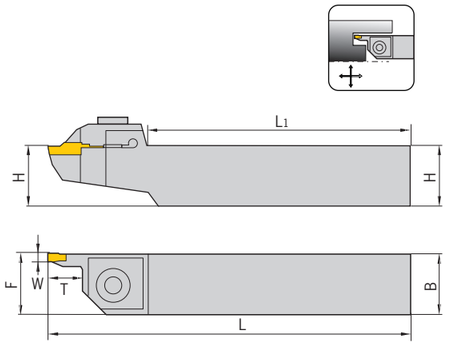

型號 Specification		D (min-max)	最大 切深T	H	B	L	F	W	刀片 Insert	螺絲 Screw	扳手 Wrench
QFFD	2525LL10-48H	48-66	10	25	25	150	26	3	ZTFD0303-MG	GS060250	L05
	2525LL17-48H	48-66	17	25	25	150	26	3	ZTFD0303-MG	GS060250	L05
	2525LL10-60H	60-80	10	25	25	150	26	3	ZTFD0303-MG	GS060250	L05
	2525LL17-60H	60-80	17	25	25	150	26	3	ZTFD0303-MG	GS060250	L05
	2525LL10-74H	74-110	10	25	25	150	26	3	ZTFD0303-MG	GS060250	L05
	2525LL17-74H	74-110	17	25	25	150	26	3	ZTFD0303-MG	GS060250	L05
	2525LL10-100H	100-150	10	25	25	150	26	3	ZTFD0303-MG	GS060250	L05
	2525LL17-100H	100-150	17	25	25	150	26	3	ZTFD0303-MG	GS060250	L05
QFGD	2525LL13-52H	52-72	13	25	25	150	26	4	ZTGD0404-MG	GS060250	L05
	2525LL22-52H	52-72	22	25	25	150	26	4	ZTGD0404-MG	GS060250	L05
	2525LL13-64H	64-100	13	25	25	150	26	4	ZTGD0404-MG	GS060250	L05
	2525LL22-64H	64-100	22	25	25	150	26	4	ZTGD0404-MG	GS060250	L05
	2525LL13-90H	90-140	13	25	25	150	26	4	ZTGD0404-MG	GS060250	L05
	2525LL22-90H	90-140	22	25	25	150	26	4	ZTGD0404-MG	GS060250	L05
	2525LL13-130H	130-230	13	25	25	150	26	4	ZTGD0404-MG	GS060250	L05
	2525LL22-130H	130-230	22	25	25	150	26	4	ZTGD0404-MG	GS060250	L05
QFHD	2525LL13-58H	58-96	13	25	25	150	26	5	ZTHD0504-MG	GS060250	L05
	2525LL22-58H	58-96	22	25	25	150	26	5	ZTHD0504-MG	GS060250	L05
	2525LL13-86H	86-140	13	25	25	150	26	5	ZTHD0504-MG	GS060250	L05
	2525LL22-86H	86-140	22	25	25	150	26	5	ZTHD0504-MG	GS060250	L05
	2525LL13-130H	130-200	13	25	25	150	26	5	ZTHD0504-MG	GS060250	L05
	2525LL22-130H	130-200	22	25	25	150	26	5	ZTHD0504-MG	GS060250	L05
	2525LL13-185H	185-400	13	25	25	150	26	5	ZTHD0504-MG	GS060250	L05
	2525LL22-185H	185-400	22	25	25	150	26	5	ZTHD0504-MG	GS060250	L05
QFKD	2525LL13-60H	60-100	13	25	25	150	26	6	ZTKD0608-MG	GS060250	L05
	2525LL22-60H	60-100	22	25	25	150	26	6	ZTKD0608-MG	GS060250	L05
	2525LL13-88H	88-180	13	25	25	150	26	6	ZTKD0608-MG	GS060250	L05
	2525LL22-88H	88-180	22	25	25	150	26	6	ZTKD0608-MG	GS060250	L05
	2525LL13-160H	160-400	13	25	25	150	26	6	ZTKD0608-MG	GS060250	L05
	2525LL22-160H	160-400	22	25	25	150	26	6	ZTKD0608-MG	GS060250	L05

適用 Suitable:德克刀片 DEREK Insert

Type Q

QF*D-L



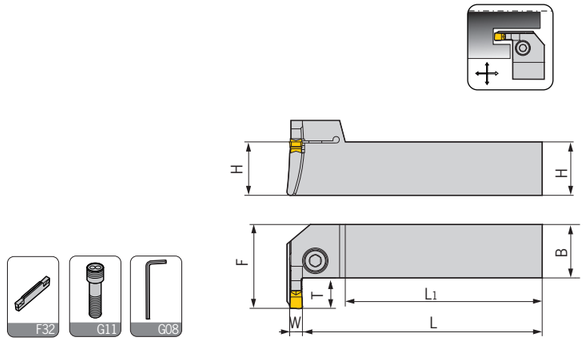

型號 Specification		D (min-max)	最大切深T	H	B	L	F	W	刀片 Insert	螺絲 Screw	扳手 Wrench
QFFD	2525R/L10-48L	48-66	10	25	25	150	26	3	ZTFD0303-MG	GS060250	L05
	2525R/L17-48L	48-66	17	25	25	150	26	3	ZTFD0303-MG	GS060250	L05
	2525R/L10-60L	60-80	10	25	25	150	26	3	ZTFD0303-MG	GS060250	L05
	2525R/L17-60L	60-80	17	25	25	150	26	3	ZTFD0303-MG	GS060250	L05
	2525R/L10-74L	74-110	10	25	25	150	26	3	ZTFD0303-MG	GS060250	L05
	2525R/L17-74L	74-110	17	25	25	150	26	3	ZTFD0303-MG	GS060250	L05
	2525R/L10-100L	100-150	10	25	25	150	26	3	ZTFD0303-MG	GS060250	L05
	2525R/L17-100L	100-150	17	25	25	150	26	3	ZTFD0303-MG	GS060250	L05
QFGD	2525R/L13-52L	52-72	13	25	25	150	26	4	ZTGD0404-MG	GS060250	L05
	2525R/L22-52L	52-72	22	25	25	150	26	4	ZTGD0404-MG	GS060250	L05
	2525R/L13-64L	64-100	13	25	25	150	26	4	ZTGD0404-MG	GS060250	L05
	2525R/L22-64L	64-100	22	25	25	150	26	4	ZTGD0404-MG	GS060250	L05
	2525R/L13-90L	90-140	13	25	25	150	26	4	ZTGD0404-MG	GS060250	L05
	2525R/L22-90L	90-140	22	25	25	150	26	4	ZTGD0404-MG	GS060250	L05
	2525R/L13-130L	130-230	13	25	25	150	26	4	ZTGD0404-MG	GS060250	L05
	2525R/L22-130L	130-230	22	25	25	150	26	4	ZTGD0404-MG	GS060250	L05
QFHD	2525R/L13-58L	58-96	13	25	25	150	26	5	ZTHD0504-MG	GS060250	L05
	2525R/L22-58L	58-96	22	25	25	150	26	5	ZTHD0504-MG	GS060250	L05
	2525R/L13-86L	86-140	13	25	25	150	26	5	ZTHD0504-MG	GS060250	L05
	2525R/L22-86L	86-140	22	25	25	150	26	5	ZTHD0504-MG	GS060250	L05
	2525R/L13-130L	130-200	13	25	25	150	26	5	ZTHD0504-MG	GS060250	L05
	2525R/L22-130L	130-200	22	25	25	150	26	5	ZTHD0504-MG	GS060250	L05
	2525R/L13-185L	185-400	13	25	25	150	26	5	ZTHD0504-MG	GS060250	L05
	2525R/L22-185L	185-400	22	25	25	150	26	5	ZTHD0504-MG	GS060250	L05
QFKD	2525R/L13-60L	60-100	13	25	25	150	26	6	ZTKD0608-MG	GS060250	L05
	2525R/L22-60L	60-100	22	25	25	150	26	6	ZTKD0608-MG	GS060250	L05
	2525R/L13-88L	88-180	13	25	25	150	26	6	ZTKD0608-MG	GS060250	L05
	2525R/L22-88L	88-180	22	25	25	150	26	6	ZTKD0608-MG	GS060250	L05
	2525R/L13-160L	160-400	13	25	25	150	26	6	ZTKD0608-MG	GS060250	L05
	2525R/L22-160L	160-400	22	25	25	150	26	6	ZTKD0608-MG	GS060250	L05

適用 Suitable:德克刀片 DEREK Insert

Type Q

QF*D**RR**



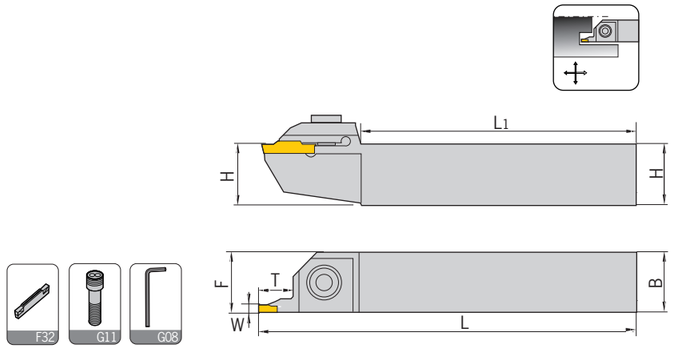

型號 Specification		D (min-max)	最大切深T	H	B	L	F	W	刀片 Insert	螺絲 Screw	扳手 Wrench
QFFD	2525RR10-48H	48-66	10	25	25	150	26	3	ZTFD0303-MG	GS060250	L05
	2525RR17-48H	48-66	17	25	25	150	26	3	ZTFD0303-MG	GS060250	L05
	2525RR10-60H	60-80	10	25	25	150	26	3	ZTFD0303-MG	GS060250	L05
	2525RR17-60H	60-80	17	25	25	150	26	3	ZTFD0303-MG	GS060250	L05
	2525RR10-74H	74-110	10	25	25	150	26	3	ZTFD0303-MG	GS060250	L05
	2525RR17-74H	74-110	17	25	25	150	26	3	ZTFD0303-MG	GS060250	L05
	2525RR10-100H	100-150	10	25	25	150	26	3	ZTFD0303-MG	GS060250	L05
	2525RR17-100H	100-150	17	25	25	150	26	3	ZTFD0303-MG	GS060250	L05
QFGD	2525RR13-52H	52-72	13	25	25	150	26	4	ZTGD0404-MG	GS060250	L05
	2525RR22-52H	52-72	22	25	25	150	26	4	ZTGD0404-MG	GS060250	L05
	2525RR13-64H	64-100	13	25	25	150	26	4	ZTGD0404-MG	GS060250	L05
	2525RR22-64H	64-100	22	25	25	150	26	4	ZTGD0404-MG	GS060250	L05
	2525RR13-90H	90-140	13	25	25	150	26	4	ZTGD0404-MG	GS060250	L05
	2525RR22-90H	90-140	22	25	25	150	26	4	ZTGD0404-MG	GS060250	L05
	2525RR13-130H	130-230	13	25	25	150	26	4	ZTGD0404-MG	GS060250	L05
	2525RR22-130H	130-230	22	25	25	150	26	4	ZTGD0404-MG	GS060250	L05
QFHD	2525RR13-58H	58-96	13	25	25	150	26	5	ZTHD0504-MG	GS060250	L05
	2525RR22-58H	58-96	22	25	25	150	26	5	ZTHD0504-MG	GS060250	L05
	2525RR13-86H	86-140	13	25	25	150	26	5	ZTHD0504-MG	GS060250	L05
	2525RR22-86H	86-140	22	25	25	150	26	5	ZTHD0504-MG	GS060250	L05
	2525RR13-130H	130-200	13	25	25	150	26	5	ZTHD0504-MG	GS060250	L05
	2525RR22-130H	130-200	22	25	25	150	26	5	ZTHD0504-MG	GS060250	L05
	2525RR13-185H	185-400	13	25	25	150	26	5	ZTHD0504-MG	GS060250	L05
	2525RR22-185H	185-400	22	25	25	150	26	5	ZTHD0504-MG	GS060250	L05
QFKD	2525RR13-60H	60-100	13	25	25	150	26	6	ZTKD0608-MG	GS060250	L05
	2525RR22-60H	60-100	22	25	25	150	26	6	ZTKD0608-MG	GS060250	L05
	2525RR13-88H	88-180	13	25	25	150	26	6	ZTKD0608-MG	GS060250	L05
	2525RR22-88H	88-180	22	25	25	150	26	6	ZTKD0608-MG	GS060250	L05
	2525RR13-160H	160-400	13	25	25	150	26	6	ZTKD0608-MG	GS060250	L05
	2525RR22-160H	160-400	22	25	25	150	26	6	ZTKD0608-MG	GS060250	L05

適用 Suitable:德克刀片 DEREK Insert

Type Q

QF*D**RL**



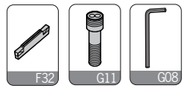

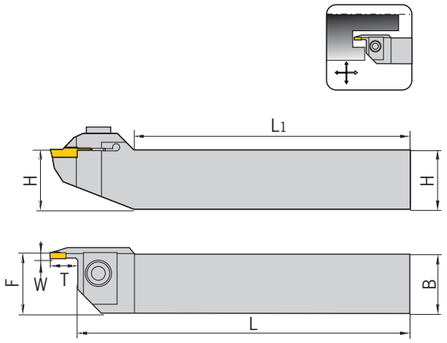

型號 Specification		D (min-max)	最大切深T	H	B	L	F	W	刀片 Insert	螺絲 Screw	扳手 Wrench
QFFD	2525RL10-48H	48-66	10	25	25	150	26	3	ZTFD0303-MG	GS060250	L05
	2525RL17-48H	48-66	17	25	25	150	26	3	ZTFD0303-MG	GS060250	L05
	2525RL10-60H	60-80	10	25	25	150	26	3	ZTFD0303-MG	GS060250	L05
	2525RL17-60H	60-80	17	25	25	150	26	3	ZTFD0303-MG	GS060250	L05
	2525RL10-74H	74-110	10	25	25	150	26	3	ZTFD0303-MG	GS060250	L05
	2525RL17-74H	74-110	17	25	25	150	26	3	ZTFD0303-MG	GS060250	L05
	2525RLL10-100H	100-150	10	25	25	150	26	3	ZTFD0303-MG	GS060250	L05
	2525R17-100H	100-150	17	25	25	150	26	3	ZTFD0303-MG	GS060250	L05
QFGD	2525RL13-52H	52-72	13	25	25	150	26	4	ZTGD0404-MG	GS060250	L05
	2525RLL22-52H	52-72	22	25	25	150	26	4	ZTGD0404-MG	GS060250	L05
	2525R13-64H	64-100	13	25	25	150	26	4	ZTGD0404-MG	GS060250	L05
	2525RL22-64H	64-100	22	25	25	150	26	4	ZTGD0404-MG	GS060250	L05
	2525RL13-90H	90-140	13	25	25	150	26	4	ZTGD0404-MG	GS060250	L05
	2525RL22-90H	90-140	22	25	25	150	26	4	ZTGD0404-MG	GS060250	L05
	2525RL13-130H	130-230	13	25	25	150	26	4	ZTGD0404-MG	GS060250	L05
	2525RL22-130H	130-230	22	25	25	150	26	4	ZTGD0404-MG	GS060250	L05
QFHD	2525RL13-58H	58-96	13	25	25	150	26	5	ZTHD0504-MG	GS060250	L05
	2525RL22-58H	58-96	22	25	25	150	26	5	ZTHD0504-MG	GS060250	L05
	2525RL13-86H	86-140	13	25	25	150	26	5	ZTHD0504-MG	GS060250	L05
	2525RL22-86H	86-140	22	25	25	150	26	5	ZTHD0504-MG	GS060250	L05
	2525RL13-130H	130-200	13	25	25	150	26	5	ZTHD0504-MG	GS060250	L05
	2525RL22-130H	130-200	22	25	25	150	26	5	ZTHD0504-MG	GS060250	L05
	2525RL13-185H	185-400	13	25	25	150	26	5	ZTHD0504-MG	GS060250	L05
	2525RL22-185H	185-400	22	25	25	150	26	5	ZTHD0504-MG	GS060250	L05
QFKD	2525RL13-60H	60-100	13	25	25	150	26	6	ZTKD0608-MG	GS060250	L05
	2525RL22-60H	60-100	22	25	25	150	26	6	ZTKD0608-MG	GS060250	L05
	2525RL13-88H	88-180	13	25	25	150	26	6	ZTKD0608-MG	GS060250	L05
	2525RL22-88H	88-180	22	25	25	150	26	6	ZTKD0608-MG	GS060250	L05
	2525R13-160H	160-400	13	25	25	150	26	6	ZTKD0608-MG	GS060250	L05
	2525RL22-160H	160-400	22	25	25	150	26	6	ZTKD0608-MG	GS060250	L05

適用 Suitable:德克刀片 DEREK Insert

Type Q

QF*D**LR**



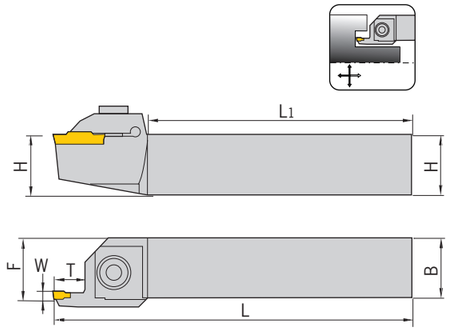

型號 Specification		D (min-max)	最大切深T	H	B	L	F	W	刀片 Insert	螺絲 Screw	扳手 Wrench
QFFD	2525LR10-48H	48-66	10	25	25	150	26	3	ZTFD0303-MG	GS060250	L05
	2525LR17-48H	48-66	17	25	25	150	26	3	ZTFD0303-MG	GS060250	L05
	2525LR10-60H	60-80	10	25	25	150	26	3	ZTFD0303-MG	GS060250	L05
	2525LR17-60H	60-80	17	25	25	150	26	3	ZTFD0303-MG	GS060250	L05
	2525LR10-74H	74-110	10	25	25	150	26	3	ZTFD0303-MG	GS060250	L05
	2525LR17-74H	74-110	17	25	25	150	26	3	ZTFD0303-MG	GS060250	L05
	2525LR10-100H	100-150	10	25	25	150	26	3	ZTFD0303-MG	GS060250	L05
	2525LR17-100H	100-150	17	25	25	150	26	3	ZTFD0303-MG	GS060250	L05
QFGD	2525LR13-52H	52-72	13	25	25	150	26	4	ZTGD0404-MG	GS060250	L05
	2525LR22-52H	52-72	22	25	25	150	26	4	ZTGD0404-MG	GS060250	L05
	2525LR13-64H	64-100	13	25	25	150	26	4	ZTGD0404-MG	GS060250	L05
	2525LR22-64H	64-100	22	25	25	150	26	4	ZTGD0404-MG	GS060250	L05
	2525LR13-90H	90-140	13	25	25	150	26	4	ZTGD0404-MG	GS060250	L05
	2525LR22-90H	90-140	22	25	25	150	26	4	ZTGD0404-MG	GS060250	L05
	2525LR13-130H	130-230	13	25	25	150	26	4	ZTGD0404-MG	GS060250	L05
	2525LR22-130H	130-230	22	25	25	150	26	4	ZTGD0404-MG	GS060250	L05
QFHD	2525LR13-58H	58-96	13	25	25	150	26	5	ZTHD0504-MG	GS060250	L05
	2525LR22-58H	58-96	22	25	25	150	26	5	ZTHD0504-MG	GS060250	L05
	2525LR13-86H	86-140	13	25	25	150	26	5	ZTHD0504-MG	GS060250	L05
	2525LR22-86H	86-140	22	25	25	150	26	5	ZTHD0504-MG	GS060250	L05
	2525LR13-130H	130-200	13	25	25	150	26	5	ZTHD0504-MG	GS060250	L05
	2525LR22-130H	130-200	22	25	25	150	26	5	ZTHD0504-MG	GS060250	L05
	2525LR13-185H	185-400	13	25	25	150	26	5	ZTHD0504-MG	GS060250	L05
	2525LR22-185H	185-400	22	25	25	150	26	5	ZTHD0504-MG	GS060250	L05
QFKD	2525LR13-60H	60-100	13	25	25	150	26	6	ZTKD0608-MG	GS060250	L05
	2525LR22-60H	60-100	22	25	25	150	26	6	ZTKD0608-MG	GS060250	L05
	2525LR13-88H	88-180	13	25	25	150	26	6	ZTKD0608-MG	GS060250	L05
	2525LR22-88H	88-180	22	25	25	150	26	6	ZTKD0608-MG	GS060250	L05
	2525LR13-160H	160-400	13	25	25	150	26	6	ZTKD0608-MG	GS060250	L05
	2525LR22-160H	160-400	22	25	25	150	26	6	ZTKD0608-MG	GS060250	L05

適用 Suitable:德克刀片 DEREK Insert

Type Q

QZQ



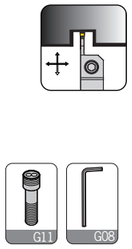

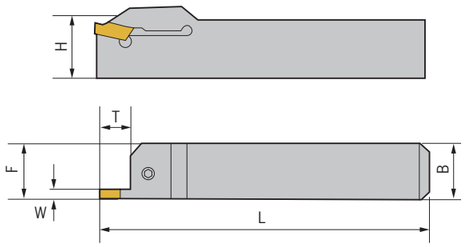

型號 Specification		最大 切深T	H	B	L	F	W	刀片 Insert	螺絲 Screw	扳手 Wrench
QZQ	**1616R/L03**	16	16	16	100	16.4	3	ZQMX3N11-1E	GS050160	L04
	2020R/L03	20	20	20	125	20.4	3	ZQMX3N11-1E	GS050160	L04
	2525R/L03	20	25	25	150	25.4	3	ZQMX3N11-1E	GS060200	L05
	3232R/L03	25	32	32	170	25.4	3	ZQMX3N11-1E	GS060200	L05
	1616R/L04	16	16	16	100	16.4	4	ZQMX4N11-1E	GS050160	L04
	2020R/L04	20	20	20	125	20.4	4	ZQMX4N11-1E	GS050160	L04
	2525R/L04	20	25	25	150	25.4	4	ZQMX4N11-1E	GS060200	L05
	3232R/L04	25	32	32	170	25.4	4	ZQMX4N11-1E	GS060200	L05

適用 Suitable:德克刀片 DEREK Insert

Q*DR/L



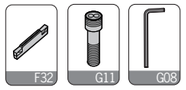

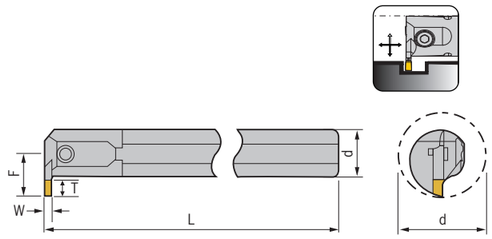

型號 Specification	最小 加工徑	最大 切深T	d	L	F	W	刀片 Insert	螺絲 Screw	扳手 Wrench
C20Q-QEDR/L05-27	27	5	20	180	15.2	2.5	ZTED***** ZRED*****	GS050120	L04
C25R-QEDR/L07-33	33	7	25	200	20.3	2.5		GS050160	L04
C32S-QEDR/L09-42	42	9	32	250	25.3	2.5		GS050160	L04
C20Q-QFDR/L05-27	27	5	20	180	15.2	3	ZTFD***** ZRFD*****	GS050120	L04
C25R-QFDR/L07-33	33	7	25	200	20.3	3		GS050160	L04
C32S-QFDR/09-42	42	9	32	250	25.3	3		GS050160	L04
C25R-QGDR/L08-35	35	8	25	200	21.5	4	ZTGD***** ZRGD*****	GS050160	L04
C32S-QGDR/L11-44	44	11	32	250	27.5	4		GS050160	L04
C40T-QGDR/L13-54	54	13	40	300	33.5	4		GS050160	L04
C25R-QHDR/L08-35	35	8	25	200	21.5	5	ZTHD***** ZRHD*****	GS050160	L05
C32S-QHDR/L11-44	44	11	32	250	27.5	5		GS060200	L05
C40T-QHDR/L13-54	54	13	40	300	33.5	5		GS060200	L05
C25R-QKDR/L08-35	35	8	25	200	21.5	6	ZTKD***** ZRKD*****	GS060160	L05
C32S-QKDR/11-44	44	11	32	250	27.5	6		GS060200	L05
C40T-QKDR/L13-54	54	13	40	300	33.5	6		GS060200	L05

適用 Suitable:德克刀片 DEREK Insert

Type S

SNGR/L



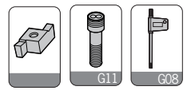

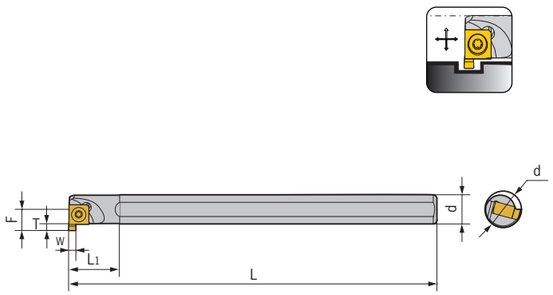

型號 Specification		最小 加工徑	d	F	L	L1	T	W	刀片 Insert	螺絲 Screw	扳手 Wrench
SNGR/L	**08H07**	10	8	5.8	100	16	1.7	2	7GR200	M2.2*5	Q06
	10K07	12	10	6.8	125	20	1.7	2	7GR200	M2.2*6	Q06
	10K08	14	10	7.6	125	20	2.2	3	8GR300	M2.2*7	Q06
	12M08	16	12	8.6	150	24	2.2	1	8GR100	M2.2*7	Q06
	16Q09	20	16	11.5	180	32	3.2	3	9GR300	M2.5*9	Q08
	20R09	24	20	13.6	200	40	3.2	3	9GR300	M2.5*9	Q08

適用 Suitable:東芝刀片 TUNGALOY Insert



DP

DP-2-E / Square / Standard / 2 Flutes
DP-2-E兩刃直柄平頭立銑刀



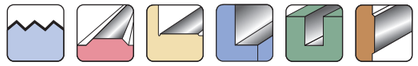

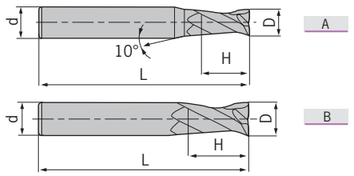









型號 Specification	刃數 Teeth	圖示 Figure	D	d	H	L
DP- D1.0S-50-2T-E	2	A	1.0	4	3	50
D1.5S-50-2T-E	2	A	1.5	4	4	50
D2.0S-50-2T-E	2	A	2.0	4	6	50
D2.5S-50-2T-E	2	A	2.5	4	8	50
D3.0S-50-2T-E	2	A	3.0	4	8	50
D4.0S-50-2T-E	2	B	4.0	4	11	50
D1.0-50-2T-E	2	A	1.0	6	3	50
D1.5-50-2T-E	2	A	1.5	6	4	50
D2.0-50-2T-E	2	A	2.0	6	6	50
D2.5-50-2T-E	2	A	2.5	6	8	50
D3.0-50-2T-E	2	A	3.0	6	8	50
D3.5-50-2T-E	2	A	3.5	6	10	50
D4.0-50-2T-E	2	A	4.0	6	11	50
D4.5-50-2T-E	2	A	4.5	6	11	50
D5.0-50-2T-E	2	A	5.0	6	13	50
D5.5-50-2T-E	2	A	5.5	6	16	50
D6.0-50-2T-E	2	B	6.0	6	16	50
D7.0-60-2T-E	2	A	7.0	8	20	60
D8.0-60-2T-E	2	B	8.0	8	20	60
D9.0-75-2T-E	2	A	9.0	10	22	75
D10.0-75-2T-E	2	B	10.0	10	25	75
D11.0-75-2T-E	2	A	11.0	12	26	75
D12.0-75-2T-E	2	B	12.0	12	30	75
D14.0-75-2T-E	2	B	14.0	14	32	75
D16.0-100-2T-E	2	B	16.0	16	45	100
D18.0-100-2T-E	2	B	18.0	18	45	100
D20.0-100-2T-E	2	B	20.0	20	45	100

■Work Piece Table ◎ Excellent ○ Good

Work Piece											
Carbon steel	Alloy steel	Pre-hardened steel、Hardened steel				Stainless steel	Cast iron, Nodular cast iron	Copper alloy	Aluminium alloy	Titanium alloy	Heat resistant alloy
		~40HRC	~50HRC	~55HRC	~68HRC						
◎	◎	◎	◎	◎		○	◎			○	○

DP

DP-2-EL / Square / Long / 2 Flutes
DP-2-EL兩刃直柄長刃平頭立銑刀



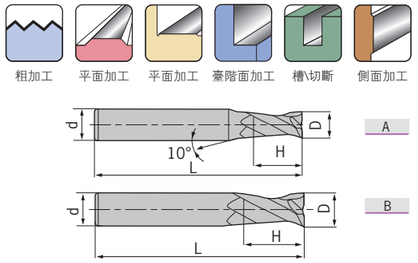

30° Coated NaNo TiAlN D D≤12 0~-0.020 12<D 0~-0.030

型號 Specification	刃數 Teeth	圖示 Figure	D	d	H	L
DP- D3.0-75-2T-EL	2	A	3.0	6	12	75
D4.0-75-2T-EL	2	A	4.0	6	15	75
D5.0-75-2T-EL	2	A	5.0	6	20	75
D6.0-75-2T-EL	2	B	6.0	6	20	75
D8.0-100-2T-EL	2	B	8.0	8	25	100
D10.0-100-2T-EL	2	B	10.0	10	30	100
D12.0-100-2T-EL	2	B	12.0	12	35	100
D14.0-100-2T-EL	2	B	14.0	14	40	100
D16.0-150-2T-EL	2	B	16.0	16	50	150
D20.0-150-2T-EL	2	B	20.0	20	55	150

■Work Piece Table ◎ Excellent ○ Good

Work Piece										
Carbon steel	Alloy steel	Pre-hardened steel、Hardened steel				Stainless steel	Cast iron, Nodular cast iron	Copper alloy	Aluminium alloy	Titanium alloy	Heat resistant alloy
		~40HRC	~50HRC	~55HRC	~68HRC						
◎	◎	◎	◎	◎		○	◎			○	○

DP

DP-4-E / Square / Standard / 4 Flutes
DP-4-E四刃直柄平頭立銑刀



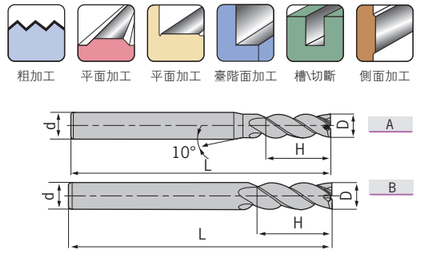

45° Coated NaNo TiAlN D D≤12 0~-0.020 12<D 0~-0.030

型號 Specification	刃數 Teeth	圖示 Figure	D	d	H	L
DP- D1.0S-50-4T-E	4	A	1.0	4	3	50
D1.5S-50-4T-E	4	A	1.5	4	4	50
D2.0S-50-4T-E	4	A	2.0	4	6	50
D2.5S-50-4T-E	4	A	2.5	4	8	50
D3.0S-50-4T-E	4	A	3.0	4	8	50
D4.0S-50-4T-E	4	B	4.0	4	11	50
D1.0-50-4T-E	4	A	1.0	6	3	50
D1.5-50-4T-E	4	A	1.5	6	4	50
D2.0-50-4T-E	4	A	2.0	6	6	50
D2.5-50-4T-E	4	A	2.5	6	8	50
D3.0-50-4T-E	4	A	3.0	6	8	50
D3.5-50-4T-E	4	A	3.5	6	10	50
D4.0-50-4T-E	4	A	4.0	6	11	50
D4.5-50-4T-E	4	A	4.5	6	11	50
D5.0-50-4T-E	4	A	5.0	6	13	50
D5.5-50-4T-E	4	A	5.5	6	16	50
D6.0-50-4T-E	4	B	6.0	6	16	50
D7.0-60-4T-E	4	A	7.0	8	20	60
D8.0-60-4T-E	4	B	8.0	8	20	60
D9.0-75-4T-E	4	A	9.0	10	22	75
D10.0-75-4T-E	4	B	10.0	10	25	75
D11.0-75-4T-E	4	A	11.0	12	26	75
D12.0-75-4T-E	4	B	12.0	12	30	75
D14.0-75-4T-E	4	B	14.0	14	32	75
D16.0-100-4T-E	4	B	16.0	16	45	100
D18.0-100-4T-E	4	B	18.0	18	45	100
D20.0-100-4T-E	4	B	20.0	20	45	100

■Work Piece Table ◎ Excellent ○ Good

Work Piece										
Carbon steel	Alloy steel	Pre-hardened steel、Hardened steel				Stainless steel	Cast iron, Nodular cast iron	Copper alloy	Aluminium alloy	Titanium alloy	Heat resistant alloy
		~40HRC	~50HRC	~55HRC	~68HRC						
◎	◎	◎	◎	◎		○	◎			○	○

DP

DP-4-EL / Square / Long / 4 Flutes
DP-4-EL四刃直柄平頭立銑刀





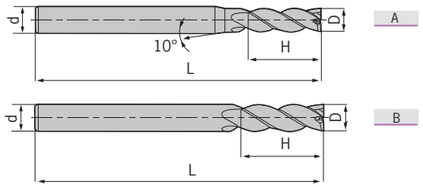



型號 Specification	刃數 Teeth	圖示 Figure	D	d	H	L
DP- D3.0-75-4T-EL	4	A	3.0	6	12	75
D4.0-75-4T-EL	4	A	4.0	6	15	75
D5.0-75-4T-EL	4	A	5.0	6	20	75
D6.0-75-4T-EL	4	B	6.0	6	20	75
D8.0-100-4T-EL	4	B	8.0	8	25	100
D10.0-100-4T-EL	4	B	10.0	10	30	100
D12.0-100-4T-EL	4	B	12.0	12	35	100
D14.0-100-4T-EL	4	B	14.0	14	40	100
D16.0-150-4T-EL	4	B	16.0	16	50	150
D20.0-150-4T-EL	4	B	20.0	20	55	150

■Work Piece Table ◎ Excellent ○ Good

Work Piece											
Carbon steel	Alloy steel	Pre-hardened steel、Hardened steel				Stainless steel	Cast iron, Nodular cast iron	Copper alloy	Aluminium alloy	Titanium alloy	Heat resistant alloy
		~40HRC	~50HRC	~55HRC	~68HRC						
◎	◎	◎	◎	◎		○	◎			○	○

DP

DP-4-G-E / Square / Standard / 4 Flutes
DP-4-G-E四刃直柄平頭立銑刀





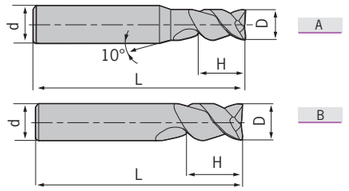



型號 Specification	刃數 Teeth	圖示 Figure	D	d	H	L
DP- D1.0S-50-4T-G-E	4	A	1.0	4	3	50
D1.5S-50-4T-G-E	4	A	1.5	4	4	50
D2.0S-50-4T-G-E	4	A	2.0	4	6	50
D2.5S-50-4T-G-E	4	A	2.5	4	8	50
D3.0S-50-4T-G-E	4	A	3.0	4	8	50
D4.0S-50-4T-G-E	4	B	4.0	4	11	50
D1.0-50-4T-G-E	4	A	1.0	6	3	50
D1.5-50-4T-G-E	4	A	1.5	6	4	50
D2.0-50-4T-G-E	4	A	2.0	6	6	50
D2.5-50-4T-G-E	4	A	2.5	6	8	50
D3.0-50-4T-G-E	4	A	3.0	6	8	50
D3.5-50-4T-G-E	4	A	3.5	6	10	50
D4.0-50-4T-G-E	4	A	4.0	6	11	50
D4.5-50-4T-G-E	4	A	4.5	6	11	50
D5.0-50-4T-G-E	4	A	5.0	6	13	50
D5.5-50-4T-G-E	4	A	5.5	6	16	50
D6.0-50-4T-G-E	4	B	6.0	6	16	50
D7.0-60-4T-G-E	4	A	7.0	8	20	60
D8.0-60-4T-G-E	4	B	8.0	8	20	60
D9.0-75-4T-G-E	4	A	9.0	10	22	75
D10.0-75-4T-G-E	4	B	10.0	10	25	75
D11.0-75-4T-G-E	4	A	11.0	12	26	75
D12.0-75-4T-G-E	4	B	12.0	12	30	75
D14.0-75-4T-G-E	4	B	14.0	14	32	75
D16.0-100-4T-G-E	4	B	16.0	16	45	100
D18.0-100-4T-G-E	4	B	18.0	18	45	100
D20.0-100-4T-G-E	4	B	20.0	20	45	100

■Work Piece Table ◎ Excellent ○ Good

Work Piece											
Carbon steel	Alloy steel	Pre-hardened steel、Hardened steel				Stainless steel	Cast iron, Nodular cast iron	Copper alloy	Aluminium alloy	Titanium alloy	Heat resistant alloy
		~40HRC	~50HRC	~55HRC	~68HRC						
◎	◎	◎	◎	◎		○	◎			○	○

DP

DP-4-G-EL / Square / Long / 4 Flutes
DP-4-G-EL四刃直柄長柄平頭立銑刀





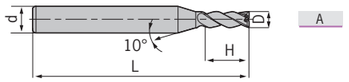

A

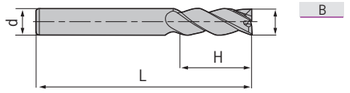

B

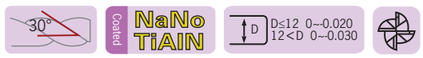

型號 Specification	刃數 Teeth	圖示 Figure	D	d	H	L
DP- D3.0-75-4T-G-EL	4	A	3.0	6	12	75
D4.0-75-4T-G-EL	4	A	4.0	6	15	75
D5.0-75-4T-G-EL	4	A	5.0	6	20	75
D6.0-75-4T-G-EL	4	B	6.0	6	20	75
D8.0-100-4T-G-EL	4	B	8.0	8	25	100
D10.0-100-4T-G-EL	4	B	10.0	10	30	100
D12.0-100-4T-G-EL	4	B	12.0	12	35	100
D14.0-100-4T-G-EL	4	B	14.0	14	40	100
D16.0-150-4T-G-EL	4	B	16.0	16	50	150
D20.0-150-4T-G-EL	4	B	20.0	20	55	150

■Work Piece Table ◎ Excellent ○ Good

Work Piece											
Carbon steel	Alloy steel	Pre-hardened steel、Hardened steel				Stainless steel	Cast iron, Nodular cast iron	Copper alloy	Aluminium alloy	Titanium alloy	Heat resistant alloy
		~40HRC	~50HRC	~55HRC	~68HRC						
◎	◎	◎	◎	◎		○	◎			○	○

DP

DP-2-B / Ball / Standard / 2 Flutes
DP-2-B兩刃直柄球頭立銑刀





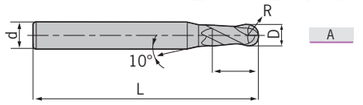

A

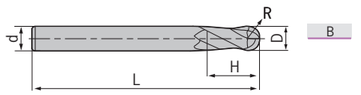

B



型號 Specification	刃數 Teeth	圖示 Figure	D	R	d	H	L
DP- R0.5S-50-2T-B	2	A	1.0	0.5	4	2	50
R0.75S-50-2T-B	2	A	1.5	0.75	4	3	50
R1.0S-50-2T-B	2	A	2.0	1.0	4	4	50
R1.25S-50-2T-B	2	A	2.5	1.25	4	5	50
R1.5S-50-2T-B	2	A	3.0	1.5	4	6	50
R2.0S-50-2T-B	2	B	4.0	2.0	4	8	50
R0.5-50-2T-B	2	A	1.0	0.5	6	2	50
R0.75-50-2T-B	2	A	1.5	0.75	6	3	50
R1.0-50-2T-B	2	A	2.0	1.0	6	4	50
R1.25-50-2T-B	2	A	2.5	1.25	6	5	50
R1.5-50-2T-B	2	A	3.0	1.5	6	6	50
R1.75-50-2T-B	2	A	3.5	1.75	6	8	50
R2.0-50-2T-B	2	A	4.0	2.0	6	8	50
R2.5-50-2T-B	2	A	5.0	2.5	6	10	50
R2.75-50-2T-B	2	A	5.5	2.75	6	12	50
R3.0-50-2T-B	2	B	6.0	3.0	6	12	50
R3.5-60-2T-B	2	A	7.0	3.5	8	14	60
R4.0-60-2T-B	2	B	8.0	4.0	8	16	60
R4.5-75-2T-B	2	A	9.0	4.5	10	18	75
R5.0-75-2T-B	2	B	10.0	5.0	10	20	75
R6.0-75-2T-B	2	B	12.0	6.0	12	24	75
R7.0-75-2T-B	2	B	14.0	7.0	14	28	75
R8.0-100-2T-B	2	B	16.0	8.0	16	32	100
R10.0-100-2T-B	2	B	20.0	10.0	20	40	100

■Work Piece Table ◎ Excellent ○ Good

Work Piece											
Carbon steel	Alloy steel	Pre-hardened steel、Hardened steel				Stailess steel	Cast iron, Nodular cast iron	Copper alloy	Aluminium alloy	Titanium alloy	Heat resistant alloy
		~40HRC	~50HRC	~55HRC	~68HRC						
◎	◎	◎	◎	◎		○	◎			○	○

DP

DP-2-BL / Ball / Long / 2 Flutes
DP-2-BL兩刃直柄長柄球頭立銑刀



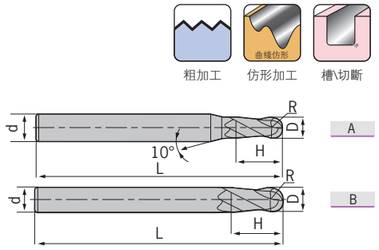

30° | Coated NaNo TiAIN | D D≤12 0~-0.020 12<D 0~-0.030 | R R±0.01

型號 Specification	刃數 Teeth	圖示 Figure	D	R	d	H	L
DP- R1.0-75-2T-BL	2	A	2.0	1.0	6	4	75
R1.25-75-2T-BL	2	A	2.5	1.25	6	5	75
R1.5-75-2T-BL	2	A	3.0	1.5	6	6	75
R1.75-75-2T-BL	2	A	3.5	1.75	6	8	75
R2.0-75-2T-BL	2	A	4.0	2.0	6	8	75
R2.5-75-2T-BL	2	A	5.0	2.5	6	10	75
R2.75-75-2T-BL	2	A	5.5	2.75	6	12	75
R3.0-75-2T-BL	2	B	6.0	3.0	6	12	75
R3.5-75-2T-BL	2	A	7.0	3.5	8	14	75
R4.0-100-2T-BL	2	B	8.0	4.0	8	16	100
R4.5-100-2T-BL	2	A	9.0	4.5	10	18	100
R5.0-100-2T-BL	2	B	10.0	5.0	10	20	100
R6.0-100-2T-BL	2	B	12.0	6.0	12	24	100
R7.0-100-2T-BL	2	B	14.0	7.0	14	28	100
R8.0-150-2T-BL	2	B	16.0	8.0	16	32	150
R10.0-150-2T-BL	2	B	20.0	10.0	20	40	150

■Work Piece Table ◎ Excellent ○ Good

Work Piece											
Carbon steel	Alloy steel	Pre-hardened steel、Hardened steel				Stainless steel	Cast iron, Nodular cast iron	Copper alloy	Aluminium alloy	Titanium alloy	Heat resistant alloy
		~40HRC	~50HRC	~55HRC	~68HRC						
◎	◎	◎	◎	◎		○	◎			○	○

DP

DP-2-R / Corner Radius / Standard / 2 Flutes
DP-2-R兩刃直柄圓弧立銑刀



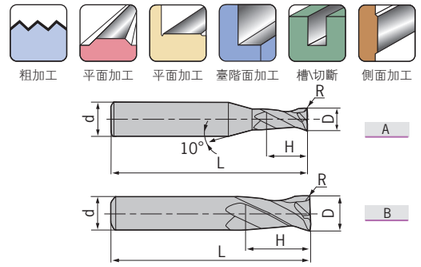

30° | Coated NaNo TiAIN | D 0~-0.020

型號 Specification	刃數 Teeth	圖示 Figure	D	R	d	H	L
DP- D1.0R0.2-50-2T-R	2	A	1.0	0.2	4	3	50
D1.5R0.2-50-2T-R	2	A	1.5	0.2	4	4	50
D2.0R0.2-50-2T-R	2	A	2.0	0.2	4	6	50
D2.0R0.5-50-2T-R	2	A	2.0	0.5	4	6	50
D2.5R0.2-50-2T-R	2	A	2.5	0.2	4	8	50
D2.5R0.5-50-2T-R	2	A	2.5	0.5	4	8	50
D3.0R0.2-50-2T-R	2	A	3.0	0.2	4	8	50
D3.0R0.3-50-2T-R	2	A	3.0	0.3	4	8	50
D3.0R0.5-50-2T-R	2	A	3.0	0.5	4	8	50
D4.0R0.2-50-2T-R	2	B	4.0	0.2	4	11	50
D4.0R0.3-50-2T-R	2	B	4.0	0.3	4	11	50
D4.0R0.5-50-2T-R	2	B	4.0	0.5	4	11	50
D4.0R1.0-50-2T-R	2	B	4.0	1.0	4	11	50
D5.0R0.3-50-2T-R	2	A	5.0	0.3	6	13	50
D5.0R0.5-50-2T-R	2	A	5.0	0.5	6	13	50
D5.0R1.0-50-2T-R	2	A	5.0	1.0	6	13	50
D6.0R0.3-50-2T-R	2	B	6.0	0.3	6	16	50
D6.0R0.5-50-2T-R	2	B	6.0	0.5	6	16	50
D6.0R1.0-50-2T-R	2	B	6.0	1.0	6	16	50
D8.0R0.3-60-2T-R	2	B	8.0	0.3	8	20	60
D8.0R0.5-60-2T-R	2	B	8.0	0.5	8	20	60
D8.0R1.0-60-2T-R	2	B	8.0	1.0	8	20	60
D10.0R0.5-75-2T-R	2	B	10.0	0.5	10	25	75
D10.0R1.0-75-2T-R	2	B	10.0	1.0	10	25	75
D10.0R1.5-75-2T-R	2	B	10.0	1.5	10	25	75
D10.0R2.0-75-2T-R	2	B	10.0	2.0	10	25	75
D12.0R0.5-75-2T-R	2	B	12.0	0.5	12	30	75
D12.0R1.0-75-2T-R	2	B	12.0	1.0	12	30	75
D12.0R1.5-75-2T-R	2	B	12.0	1.5	12	30	75
D12.0R2.0-75-2T-R	2	B	12.0	2.0	12	30	75

■Work Piece Table ◎ Excellent ○ Good

Work Piece											
Carbon steel	Alloy steel	Pre-hardened steel、Hardened steel				Stainless steel	Cast iron, Nodular cast iron	Copper alloy	Aluminium alloy	Titanium alloy	Heat resistant alloy
		~40HRC	~50HRC	~55HRC	~68HRC						
◎	◎	◎	◎	◎		○	◎			○	○

DP

DP-4-R /Corner Radius / Standard / 4 Flutes
DP-4-R四刃直柄圓弧立銑刀





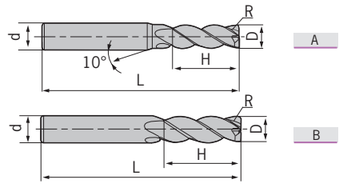

30° | Coated NaNo TiAlN | D 0~-0.020

型號 Specification	刃數 Teeth	圖示 Figure	D	R	d	H	L
DP- D3.0R0.2-50-4T-R	4	A	3.0	0.2	6	8	50
D4.0R0.3-50-4T-R	4	B	4.0	0.3	6	10	50
D4.0R0.5-50-4T-R	4	B	4.0	0.5	6	10	50
D5.0R0.5-50-4T-R	4	A	5.0	0.5	6	13	50
D5.0R1.0-50-4T-R	4	A	5.0	1.0	6	13	50
D6.0R0.5-50-4T-R	4	B	6.0	0.5	6	16	50
D6.0R1.0-50-4T-R	4	B	6.0	1.0	6	16	50
D8.0R0.5-60-4T-R	4	B	8.0	0.5	8	20	60
D8.0R1.0-60-4T-R	4	B	8.0	1.0	8	20	60
D10.0R0.5-75-4T-R	4	B	10.0	0.5	10	25	75
D10.0R1.0-75-4T-R	4	B	10.0	1.0	10	25	75
D10.0R2.0-75-4T-R	4	B	10.0	2.0	10	25	75
D10.0R3.0-75-4T-R	4	B	10.0	3.0	10	25	75
D12.0R0.5-75-4T-R	4	B	12.0	0.5	12	30	75
D12.0R1.0-75-4T-R	4	B	12.0	1.0	12	30	75
D12.0R2.0-75-4T-R	4	B	12.0	2.0	12	30	75
D12.0R3.0-75-4T-R	4	B	12.0	3.0	12	30	75

■Work Piece Table ◎ Excellent ○ Good

Work Piece											
Carbon steel	Alloy steel	Pre-hardened steel、Hardened steel				Stainless steel	Cast iron, Nodular cast iron	Copper alloy	Aluminium alloy	Titanium alloy	Heat resistant alloy
		~40HRC	~50HRC	~55HRC	~68HRC						
◎	◎	◎	◎	◎		○	◎			○	○

DG

DG-2-E / Square / Standard / 2 Flutes
DG-2-E兩刃直柄平頭立銑刀





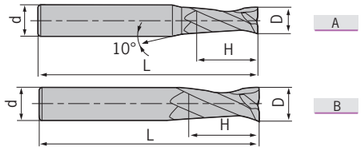

35° | Coated TiAlN | D D≤12 0~-0.020 12<D 0~-0.030

型號 Specification	刃數 Teeth	圖示 Figure	D	d	H	L
DG- D1.0S-50-2T-E	2	A	1.0	4	3	50
D1.5S-50-2T-E	2	A	1.5	4	4	50
D2.0S-50-2T-E	2	A	2.0	4	6	50
D2.5S-50-2T-E	2	A	2.5	4	8	50
D3.0S-50-2T-E	2	A	3.0	4	8	50
D4.0S-50-2T-E	2	B	4.0	4	11	50
D1.0-50-2T-E	2	A	1.0	6	3	50
D1.5-50-2T-E	2	A	1.5	6	4	50
D2.0-50-2T-E	2	A	2.0	6	6	50
D2.5-50-2T-E	2	A	2.5	6	8	50
D3.0-50-2T-E	2	A	3.0	6	8	50
D3.5-50-2T-E	2	A	3.5	6	10	50
D4.0-50-2T-E	2	A	4.0	6	11	50
D4.5-50-2T-E	2	A	4.5	6	11	50
D5.0-50-2T-E	2	A	5.0	6	13	50
D5.5-50-2T-E	2	A	5.5	6	16	50
D6.0-50-2T-E	2	B	6.0	6	16	50
D7.0-60-2T-E	2	A	7.0	8	20	60
D8.0-60-2T-E	2	B	8.0	8	20	60
D9.0-75-2T-E	2	A	9.0	10	22	75
D10.0-75-2T-E	2	B	10.0	10	25	75
D11.0-75-2T-E	2	A	11.0	12	26	75
D12.0-75-2T-E	2	B	12.0	12	30	75
D14.0-75-2T-E	2	B	14.0	14	32	75
D16.0-100-2T-E	2	B	16.0	16	45	100
D18.0-100-2T-E	2	B	18.0	18	45	100
D20.0-100-2T-E	2	B	20.0	20	45	100

■Work Piece Table ◎ Excellent ○ Good

Work Piece											
Carbon steel	Alloy steel	Pre-hardened steel、Hardened steel				Stainless steel	Cast iron, Nodular cast iron	Copper alloy	Aluminium alloy	Titanium alloy	Heat resistant alloy
		~40HRC	~50HRC	~55HRC	~68HRC						
◎	◎	◎	○			○	◎				

DG

DG-2-EL / Square / Long / 2 Flutes
DG-2-EL兩刃直柄長刃平頭立銑刀





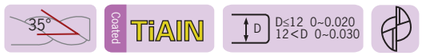

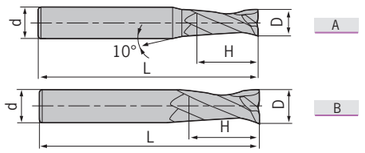

型號 Specification	刃數 Teeth	圖示 Figure	D	d	H	L
DG- D3.0-75-2T-EL	2	A	3.0	6	12	75
D4.0-75-2T-EL	2	A	4.0	6	15	75
D5.0-75-2T-EL	2	A	5.0	6	20	75
D6.0-75-2T-EL	2	B	6.0	6	20	75
D8.0-100-2T-EL	2	B	8.0	8	25	100
D10.0-100-2T-EL	2	B	10.0	10	30	100
D12.0-100-2T-EL	2	B	12.0	12	35	100
D14.0-100-2T-EL	2	B	14.0	14	40	100
D16.0-150-2T-EL	2	B	16.0	16	50	150
D20.0-150-2T-EL	2	B	20.0	20	55	150

■Work Piece Table ◎ Excellent ○ Good

Work Piece										
Carbon steel	Alloy steel	Pre-hardened steel、Hardened steel				Stainless steel	Cast iron, Nodular cast iron	Copper alloy	Aluminium alloy	Titanium alloy	Heat resistant alloy
		~40HRC	~50HRC	~55HRC	~68HRC						
◎	◎	◎	○			○	◎				

DG

DG-2-ES / Square / Micro / 2 Flutes
DG-2-ES兩刃直柄微小徑平頭立銑刀





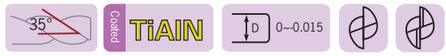

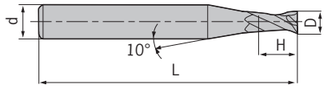

型號 Specification	刃數 Teeth	D	d	H	L
DG- D0.3-50-2T-ES	2	0.3	4	0.6	50
D0.4-50-2T-ES	2	0.4	4	0.8	50
D0.5-50-2T-ES	2	0.5	4	1.0	50
D0.6-50-2T-ES	2	0.6	4	1.2	50
D0.7-50-2T-ES	2	0.7	4	1.4	50
D0.8-50-2T-ES	2	0.8	4	1.6	50
D0.9-50-2T-ES	2	0.9	4	1.8	50
D1.0-50-2T-ES	2	1.0	4	2.0	50
D1.1-50-2T-ES	2	1.1	4	2.0	50
D1.2-50-2T-ES	2	1.2	4	2.5	50
D1.3-50-2T-ES	2	1.3	4	2.5	50
D1.4-50-2T-ES	2	1.4	4	3.0	50
D1.5-50-2T-ES	2	1.5	4	3.0	50
D1.6-50-2T-ES	2	1.6	4	3.5	50
D1.7-50-2T-ES	2	1.7	4	3.5	50
D1.8-50-2T-ES	2	1.8	4	4.0	50
D1.9-50-2T-ES	2	1.9	4	4.0	50
D2.0-50-2T-ES	2	2.0	4	4.0	50
D2.1-50-2T-ES	2	2.1	4	4.0	50
D2.2-50-2T-ES	2	2.2	4	4.5	50
D2.3-50-2T-ES	2	2.3	4	4.5	50
D2.4-50-2T-ES	2	2.4	4	5.0	50
D2.5-50-2T-ES	2	2.5	4	5.0	50
D2.6-50-2T-ES	2	2.6	4	5.0	50
D2.7-50-2T-ES	2	2.7	4	5.5	50
D2.8-50-2T-ES	2	2.8	4	5.5	50
D2.9-50-2T-ES	2	2.9	4	6.0	50
D3.0-50-2T-ES	2	3.0	4	6.0	50

■Work Piece Table ◎ Excellent ○ Good

Work Piece										
Carbon steel	Alloy steel	Pre-hardened steel、Hardened steel				Stainless steel	Cast iron, Nodular cast iron	Copper alloy	Aluminium alloy	Titanium alloy	Heat resistant alloy
		~40HRC	~50HRC	~55HRC	~68HRC						
◎	◎	◎	○			○	◎				

DG

DG-2-EP / Square / Long Neck / Short Flute / 2 Flutes
DG-2-EP兩刃直柄長頸短刃平頭立銑刀





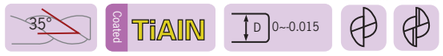

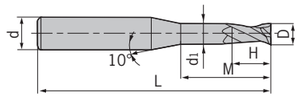

型號 Specification	刃數 Teeth	D	d	H	M	d1	L
DG- D0.5-M04-50-2T-EP	2	0.5	4	0.7	4	0.45	50
D0.5-M06-50-2T-EP	2	0.5	4	0.7	6	0.45	50
D0.5-M08-50-2T-EP	2	0.5	4	0.7	8	0.45	50
D0.8-M04-50-2T-EP	2	0.8	4	1.2	4	0.75	50
D0.8-M06-50-2T-EP	2	0.8	4	1.2	6	0.75	50
D0.8-M08-50-2T-EP	2	0.8	4	1.2	8	0.75	50
D0.8-M10-50-2T-EP	2	0.8	4	1.2	10	0.75	50
D1.0-M04-50-2T-EP	2	1.0	4	1.5	4	0.95	50
D1.0-M06-50-2T-EP	2	1.0	4	1.5	6	0.95	50
D1.0-M08-50-2T-EP	2	1.0	4	1.5	8	0.95	50
D1.0-M10-50-2T-EP	2	1.0	4	1.5	10	0.95	50
D1.0-M12-50-2T-EP	2	1.0	4	1.5	12	0.95	50
D1.0-M14-50-2T-EP	2	1.0	4	1.5	14	0.95	50
D1.2-M06-50-2T-EP	2	1.2	4	1.8	6	1.15	50
D1.2-M08-50-2T-EP	2	1.2	4	1.8	8	1.15	50
D1.2-M10-50-2T-EP	2	1.2	4	1.8	10	1.15	50
D1.2-M12-50-2T-EP	2	1.2	4	1.8	12	1.15	50
D1.5-M06-50-2T-EP	2	1.5	4	2.3	6	1.45	50
D1.5-M08-50-2T-EP	2	1.5	4	2.3	8	1.45	50
D1.5-M10-50-2T-EP	2	1.5	4	2.3	10	1.45	50
D1.5-M12-50-2T-EP	2	1.5	4	2.3	12	1.45	50
D1.5-M14-50-2T-EP	2	1.5	4	2.3	14	1.45	50
D2.0-M06-50-2T-EP	2	2.0	4	3.0	6	1.95	50
D2.0-M08-50-2T-EP	2	2.0	4	3.0	8	1.95	50
D2.0-M10-50-2T-EP	2	2.0	4	3.0	10	1.95	50
D2.0-M12-50-2T-EP	2	2.0	4	3.0	12	1.95	50
D2.0-M14-50-2T-EP	2	2.0	4	3.0	14	1.95	50
D2.0-M16-50-2T-EP	2	2.0	4	3.0	16	1.95	50

轉下頁
See next page

■Work Piece Table ◎ Excellent ○ Good

Work Piece											
Carbon steel	Alloy steel	Pre-hardened steel、Hardened steel				Stainless steel	Cast iron, Nodular cast iron	Copper alloy	Aluminium alloy	Titanium alloy	Heat resistant alloy
		~40HRC	~50HRC	~55HRC	~68HRC						
◎	◎	◎	○			○	◎				

DG

DG-2-EP / Square / Long Neck / Short Flute / 2 Flutes
DG-2-EP兩刃直柄長頸短刃平頭立銑刀





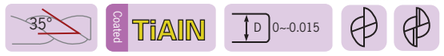

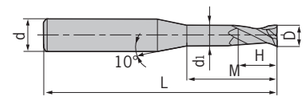

型號 Specification	刃數 Teeth	D	d	H	M	d1	L
DG- D2.5-M08-50-2T-EP	2	2.5	4	3.7	8	2.4	50
D2.5-M10-50-2T-EP	2	2.5	4	3.7	10	2.4	50
D2.5-M12-50-2T-EP	2	2.5	4	3.7	12	2.4	50
D2.5-M14-50-2T-EP	2	2.5	4	3.7	14	2.4	50
D2.5-M16-60-2T-EP	2	2.5	4	3.7	16	2.4	60
D2.5-M18-60-2T-EP	2	2.5	4	3.7	18	2.4	60
D2.5-M20-60-2T-EP	2	2.5	4	3.7	20	2.4	60
D3.0-M06-50-2T-EP	2	3.0	6	4.5	6	2.85	50
D3.0-M08-50-2T-EP	2	3.0	6	4.5	8	2.85	50
D3.0-M10-50-2T-EP	2	3.0	6	4.5	10	2.85	50
D3.0-M12-50-2T-EP	2	3.0	6	4.5	12	2.85	50
D3.0-M14-60-2T-EP	2	3.0	6	4.5	14	2.85	60
D3.0-M16-60-2T-EP	2	3.0	6	4.5	16	2.85	60
D3.0-M18-60-2T-EP	2	3.0	6	4.5	18	2.85	60
D3.0-M20-60-2T-EP	2	3.0	6	4.5	20	2.85	60
D4.0-M12-50-2T-EP	2	4.0	6	6.0	12	3.85	50
D4.0-M16-60-2T-EP	2	4.0	6	6.0	16	3.85	60
D4.0-M20-60-2T-EP	2	4.0	6	6.0	20	3.85	60
D4.0-M25-60-2T-EP	2	4.0	6	6.0	25	3.85	60
D5.0-M16-60-2T-EP	2	5.0	6	7.5	16	4.85	60
D5.0-M25-70-2T-EP	2	5.0	6	7.5	25	4.85	70

■Work Piece Table ◎ Excellent ○ Good

Work Piece											
Carbon steel	Alloy steel	Pre-hardened steel、Hardened steel				Stainless steel	Cast iron, Nodular cast iron	Copper alloy	Aluminium alloy	Titanium alloy	Heat resistant alloy
		~40HRC	~50HRC	~55HRC	~68HRC						
◎	◎	◎	○			○	◎				

DG

DG-4-E / Square / Standard / 4 Flutes
DG-4-E四刃直柄平頭立銑刀





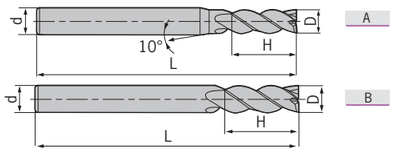



型號 Specification	刃數 Teeth	圖示 Figure	D	d	H	L
DG- **D1.0S-50-4T-E**	4	A	1.0	4	3	50
D1.5S-50-4T-E	4	A	1.5	4	4	50
D2.0S-50-4T-E	4	A	2.0	4	6	50
D2.5S-50-4T-E	4	A	2.5	4	8	50
D3.0S-50-4T-E	4	A	3.0	4	8	50
D4.0S-50-4T-E	4	B	4.0	4	11	50
D1.0-50-4T-E	4	A	1.0	6	3	50
D1.5-50-4T-E	4	A	1.5	6	4	50
D2.0-50-4T-E	4	A	2.0	6	6	50
D2.5-50-4T-E	4	A	2.5	6	8	50
D3.0-50-4T-E	4	A	3.0	6	8	50
D3.5-50-4T-E	4	A	3.5	6	10	50
D4.0-50-4T-E	4	A	4.0	6	11	50
D4.5-50-4T-E	4	A	4.5	6	11	50
D5.0-50-4T-E	4	A	5.0	6	13	50
D5.5-50-4T-E	4	A	5.5	6	16	50
D6.0-50-4T-E	4	B	6.0	6	16	50
D7.0-60-4T-E	4	A	7.0	8	20	60
D8.0-60-4T-E	4	B	8.0	8	20	60
D9.0-75-4T-E	4	A	9.0	10	22	75
D10.0-75-4T-E	4	B	10.0	10	25	75
D11.0-75-4T-E	4	A	11.0	12	26	75
D12.0-75-4T-E	4	B	12.0	12	30	75
D14.0-75-4T-E	4	B	14.0	14	32	75
D16.0-100-4T-E	4	B	16.0	16	45	100
D18.0-100-4T-E	4	B	18.0	18	45	100
D20.0-100-4T-E	4	B	20.0	20	45	100

■Work Piece Table ◎ Excellent ○ Good

Work Piece										
Carbon steel	Alloy steel	Pre-hardened steel、Hardened steel				Stainless steel	Cast iron, Nodular cast iron	Copper alloy	Aluminium alloy	Titanium alloy	Heat resistant alloy
		~40HRC	~50HRC	~55HRC	~68HRC						
◎	◎	◎	○	◎		○	◎				

DG

DG-4-EL / Square / Long / 4 Flutes
DG-4-EL四刃直柄長刃平頭立銑刀





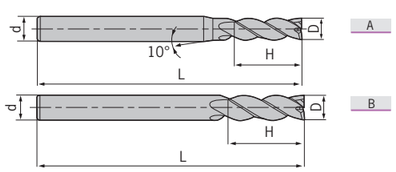



型號 Specification	刃數 Teeth	圖示 Figure	D	d	H	L
DG- **D3.0-75-4T-EL**	4	A	3.0	6	12	75
D4.0-75-4T-EL	4	A	4.0	6	15	75
D5.0-75-4T-EL	4	A	5.0	6	20	75
D6.0-75-4T-EL	4	B	6.0	6	20	75
D8.0-100-4T-EL	4	B	8.0	8	25	100
D10.0-100-4T-EL	4	B	10.0	10	30	100
D12.0-100-4T-EL	4	B	12.0	12	35	100
D14.0-100-4T-EL	4	B	14.0	14	40	100
D16.0-150-4T-EL	4	B	16.0	16	50	150
D20.0-150-4T-EL	4	B	20.0	20	55	150

■Work Piece Table ◎ Excellent ○ Good

Work Piece										
Carbon steel	Alloy steel	Pre-hardened steel、Hardened steel				Stainless steel	Cast iron, Nodular cast iron	Copper alloy	Aluminium alloy	Titanium alloy	Heat resistant alloy
		~40HRC	~50HRC	~55HRC	~68HRC						
◎	◎	◎	○			○	◎				

DG

DG-4-G-E / Square / Standard / 4 Flutes
DG-4-G-E四刃直柄平頭立銑刀



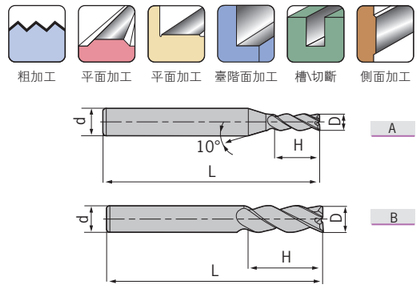

30° | Coated TiAlN | D: D≤12 0~-0.020, 12<D 0~-0.030

型號 Specification	刃數 Teeth	圖示 Figure	D	d	H	L
DG- D1.0S-50-4T-G-E	4	A	1.0	4	3	50
D1.5S-50-4T-G-E	4	A	1.5	4	4	50
D2.0S-50-4T-G-E	4	A	2.0	4	6	50
D2.5S-50-4T-G-E	4	A	2.5	4	8	50
D3.0S-50-4T-G-E	4	A	3.0	4	8	50
D4.0S-50-4T-G-E	4	B	4.0	4	11	50
D1.0-50-4T-G-E	4	A	1.0	6	3	50
D1.5-50-4T-G-E	4	A	1.5	6	4	50
D2.0-50-4T-G-E	4	A	2.0	6	6	50
D2.5-50-4T-G-E	4	A	2.5	6	8	50
D3.0-50-4T-G-E	4	A	3.0	6	8	50
D3.5-50-4T-G-E	4	A	3.5	6	10	50
D4.0-50-4T-G-E	4	A	4.0	6	11	50
D4.5-50-4T-G-E	4	A	4.5	6	11	50
D5.0-50-4T-G-E	4	A	5.0	6	13	50
D5.5-50-4T-G-E	4	A	5.5	6	16	50
D6.0-50-4T-G-E	4	B	6.0	6	16	50
D7.0-60-4T-G-E	4	A	7.0	8	20	60
D8.0-60-4T-G-E	4	B	8.0	8	20	60
D9.0-75-4T-G-E	4	A	9.0	10	22	75
D10.0-75-4T-G-E	4	B	10.0	10	25	75
D11.0-75-4T-G-E	4	A	11.0	12	26	75
D12.0-75-4T-G-E	4	B	12.0	12	30	75
D14.0-75-4T-G-E	4	B	14.0	14	32	75
D16.0-100-4T-G-E	4	B	16.0	16	45	100
D18.0-100-4T-G-E	4	B	18.0	18	45	100
D20.0-100-4T-G-E	4	B	20.0	20	45	100

■Work Piece Table ◎ Excellent ○ Good

Work Piece										
Carbon steel	Alloy steel	Pre-hardened steel、Hardened steel ~40HRC	~50HRC	~55HRC	~68HRC	Stainless steel	Cast iron, Nodular cast iron	Copper alloy	Aluminium alloy	Titanium alloy	Heat resistant alloy
◎	◎	◎	○			○	◎				

DG

DG-4-G-EL / Square / Long / 4 Flutes
DG-4-G-EL四刃直柄長刃平頭立銑刀



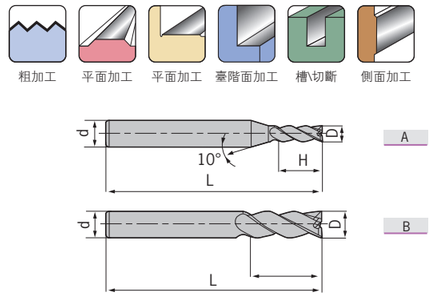

30° | Coated TiAlN | D: D≤12 0~-0.020, 12<D 0~-0.030

型號 Specification	刃數 Teeth	圖示 Figure	D	d	H	L
DG- D3.0-75-4T-G-EL	4	A	3.0	6	12	75
D4.0-75-4T-G-EL	4	A	4.0	6	15	75
D5.0-75-4T-G-EL	4	A	5.0	6	20	75
D6.0-75-4T-G-EL	4	B	6.0	6	20	75
D8.0-100-4T-G-EL	4	B	8.0	8	25	100
D10.0-100-4T-G-EL	4	B	10.0	10	30	100
D12.0-100-4T-G-EL	4	B	12.0	12	35	100
D14.0-100-4T-G-EL	4	B	14.0	14	40	100
D16.0-150-4T-G-EL	4	B	16.0	16	50	150
D20.0-150-4T-G-EL	4	B	20.0	20	55	150

■Work Piece Table ◎ Excellent ○ Good

Work Piece										
Carbon steel	Alloy steel	Pre-hardened steel、Hardened steel ~40HRC	~50HRC	~55HRC	~68HRC	Stainless steel	Cast iron, Nodular cast iron	Copper alloy	Aluminium alloy	Titanium alloy	Heat resistant alloy
◎	◎	◎	○			○	◎				

DG

DG-6-E / Square / Standard / 6 Flutes
DG-6-E六刃直柄平頭立銑刀



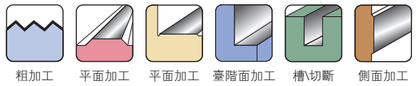



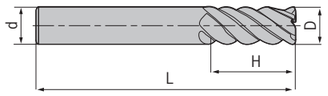

型號 Specification		刃數 Teeth	D	d	H	L
DG-	D6.0-60-6T-E	6	6.0	6	18	60
	D8.0-60-6T-E	6	8.0	8	20	60
	D10.0-75-6T-E	6	10.0	10	30	75
	D12.0-75-6T-E	6	12.0	12	32	75
	D16.0-100-6T-E	6	16.0	16	40	100
	D20.0-100-6T-E	6	20.0	20	45	100

特點 / Feature

■刀具剛性好，最適宜側面精銑加工。 ■ High rigidity for side milling.
■可進行高速，大進給加工。 ■ High feed at high speed.

■Work Piece Table ◎ Excellent ○ Good

Work Piece										
Carbon steel	Alloy steel	Pre-hardened steel、Hardened steel				Stainless steel	Cast iron, Nodular cast iron	Copper alloy	Aluminium alloy	Titanium alloy	Heat resistant alloy
		~40HRC	~50HRC	~55HRC	~68HRC						
◎	◎	◎	○			○	◎				

DG

DG-6-EL / Square / Long / 6 Flutes
DG-6-EL六刃直柄長刃平頭立銑刀







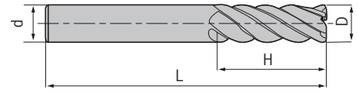

型號 Specification		刃數 Teeth	D	d	H	L
DG-	D6.0-75-6T-EL	6	6.0	6	24	75
	D8.0-75-6T-EL	6	8.0	8	32	75
	D10.0-100-6T-EL	6	10.0	10	40	100
	D12.0-100-6T-EL	6	12.0	12	45	100
	D16.0-150-6T-EL	6	16.0	16	64	150
	D20.0-150-6T-EL	6	20.0	20	75	150

■Work Piece Table ◎ Excellent ○ Good

Work Piece										
Carbon steel	Alloy steel	Pre-hardened steel、Hardened steel				Stainless steel	Cast iron, Nodular cast iron	Copper alloy	Aluminium alloy	Titanium alloy	Heat resistant alloy
		~40HRC	~50HRC	~55HRC	~68HRC						
◎	◎	◎	○			○	◎				

DG

DG-2-B / Ball / Standard / 2 Flutes
DG-2-B兩刃直柄球頭立銑刀





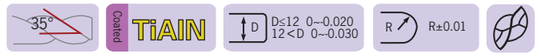

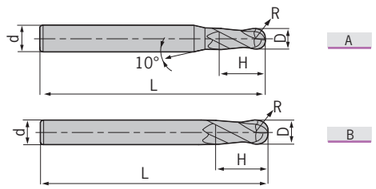

型號 Specification	刃數 Teeth	圖示 Figure	D	R	d	H	L
DG- R0.5S-50-2T-B	2	A	1.0	0.5	4	2	50
R0.75S-50-2T-B	2	A	1.5	0.75	4	3	50
R1.0S-50-2T-B	2	A	2.0	1.0	4	4	50
R1.25S-50-2T-B	2	A	2.5	1.25	4	5	50
R1.5S-50-2T-B	2	A	3.0	1.5	4	6	50
R2.0S-50-2T-B	2	B	4.0	2.0	4	8	50
R0.5-50-2T-B	2	A	1.0	0.5	6	2	50
R0.75-50-2T-B	2	A	1.5	0.75	6	3	50
R1.0-50-2T-B	2	A	2.0	1.0	6	4	50
R1.25-50-2T-B	2	A	2.5	1.25	6	5	50
R1.5-50-2T-B	2	A	3.0	1.5	6	6	50
R1.75-50-2T-B	2	A	3.5	1.75	6	8	50
R2.0-50-2T-B	2	A	4.0	2.0	6	8	50
R2.5-50-2T-B	2	A	5.0	2.5	6	10	50
R2.75-50-2T-B	2	A	5.5	2.75	6	12	50
R3.0-50-2T-B	2	B	6.0	3.0	6	12	50
R3.5-60-2T-B	2	A	7.0	3.5	8	14	60
R4.0-60-2T-B	2	B	8.0	4.0	8	16	60
R4.5-75-2T-B	2	A	9.0	4.5	10	18	75
R5.0-75-2T-B	2	B	10.0	5.0	10	20	75
R6.0-75-2T-B	2	B	12.0	6.0	12	24	75
R7.0-75-2T-B	2	B	14.0	7.0	14	28	75
R8.0-100-2T-B	2	B	16.0	8.0	16	32	100
R10.0-100-2T-B	2	B	20.0	10.0	20	40	100

特 點 / Feature

■適合于仿形銑削，可作高速加工。 ■ For profiling at high speed.

■Work Piece Table ◎ Excellent ○ Good

Work Piece										
Carbon steel	Alloy steel	Pre-hardened steel、Hardened steel				Stainless steel	Cast iron, Nodular cast iron	Copper alloy	Aluminium alloy	Titanium alloy	Heat resistant alloy
		~40HRC	~50HRC	~55HRC	~68HRC						
◎	◎	◎	○			○	◎				

DG

DG-2-BL / Ball / Long / 2 Flutes
DG-2-BL兩刃直柄長刃球頭立銑刀





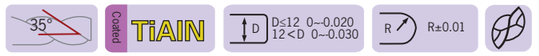

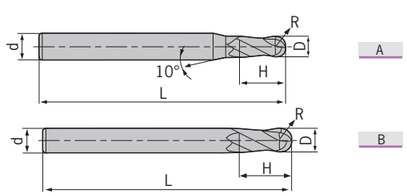

型號 Specification	刃數 Teeth	圖示 Figure	D	R	d	H	L
DG- R1.0-75-2T-BL	2	A	2.0	1.0	6	4	75
R1.25-75-2T-BL	2	A	2.5	1.25	6	5	75
R1.5-75-2T-BL	2	A	3.0	1.5	6	6	75
R1.75-75-2T-BL	2	A	3.5	1.75	6	8	75
R2.0-75-2T-BL	2	A	4.0	2.0	6	8	75
R2.5-75-2T-BL	2	A	5.0	2.5	6	10	75
R2.75-75-2T-BL	2	A	5.5	2.75	6	12	75
R3.0-75-2T-BL	2	B	6.0	3.0	6	12	75
R3.5-75-2T-BL	2	A	7.0	3.5	8	14	75
R4.0-100-2T-BL	2	B	8.0	4.0	8	16	100
R4.5-100-2T-BL	2	A	9.0	4.5	10	18	100
R5.0-100-2T-BL	2	B	10.0	5.0	10	20	100
R6.0-100-2T-BL	2	B	12.0	6.0	12	24	100
R7.0-100-2T-BL	2	B	14.0	7.0	14	28	100
R8.0-150-2T-BL	2	B	16.0	8.0	16	32	150
R10.0-150-2T-BL	2	B	20.0	10.0	20	40	150

■Work Piece Table ◎ Excellent ○ Good

Work Piece										
Carbon steel	Alloy steel	Pre-hardened steel、Hardened steel				Stainless steel	Cast iron, Nodular cast iron	Copper alloy	Aluminium alloy	Titanium alloy	Heat resistant alloy
		~40HRC	~50HRC	~55HRC	~68HRC						
◎	◎	◎	○			○	◎				

DG

DG-2-BP / Ball / Long Neck / Short Flute / 2 Flutes
DG-2-BP兩刃直柄長頸短刃球頭立銑刀



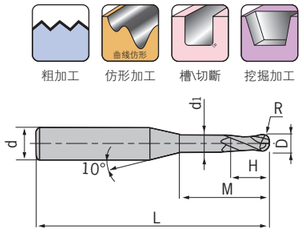

35° | Coated TiAlN | D 0 ~-0.015 | R R±0.005 R<0.5 R±0.01 R≥0.5

型號 Specification	刃數 Teeth	D	R	H	d1	M	d	L
DG- R0.25-M04-50-2T-BP	2	0.5	0.25	0.7	0.45	4	4	50
R0.25-M06-50-2T-BP	2	0.5	0.25	0.7	0.45	6	4	50
R0.3-M04-50-2T-BP	2	0.6	0.3	0.9	0.55	4	4	50
R0.3-M06-50-2T-BP	2	0.6	0.3	0.9	0.55	6	4	50
R0.3-M08-50-2T-BP	2	0.6	0.3	0.9	0.55	8	4	50
R0.4-M04-50-2T-BP	2	0.8	0.4	1.2	0.75	4	4	50
R0.4-M06-50-2T-BP	2	0.8	0.4	1.2	0.75	6	4	50
R0.4-M08-50-2T-BP	2	0.8	0.4	1.2	0.75	8	4	50
R0.4-M10-50-2T-BP	2	0.8	0.4	1.2	0.75	10	4	50
R0.5-M04-50-2T-BP	2	1.0	0.5	1.5	0.95	4	4	50
R0.5-M06-50-2T-BP	2	1.0	0.5	1.5	0.95	6	4	50
R0.5-M08-50-2T-BP	2	1.0	0.5	1.5	0.95	8	4	50
R0.5-M10-50-2T-BP	2	1.0	0.5	1.5	0.95	10	4	50
R0.5-M12-50-2T-BP	2	1.0	0.5	1.5	0.95	12	4	50
R0.6-M06-50-2T-BP	2	1.2	0.6	1.8	1.15	6	4	50
R0.6-M08-50-2T-BP	2	1.2	0.6	1.8	1.15	8	4	50
R0.6-M12-50-2T-BP	2	1.2	0.6	1.8	1.15	12	4	50
R0.6-M16-50-2T-BP	2	1.2	0.6	1.8	1.15	16	4	50
R0.75-M08-50-2T-BP	2	1.5	0.75	2.3	1.45	8	4	50
R0.75-M12-50-2T-BP	2	1.5	0.75	2.3	1.45	12	4	50
R0.75-M16-50-2T-BP	2	1.5	0.75	2.3	1.45	16	4	50
R1.0-M06-50-2T-BP	2	2.0	1.0	3.0	1.95	6	4	50
R1.0-M08-50-2T-BP	2	2.0	1.0	3.0	1.95	8	4	50
R1.0-M10-50-2T-BP	2	2.0	1.0	3.0	1.95	10	4	50
R1.0-M12-50-2T-BP	2	2.0	1.0	3.0	1.95	12	4	50
R1.0-M16-50-2T-BP	2	2.0	1.0	3.0	1.95	16	4	50
R1.0-M20-50-2T-BP	2	2.0	1.0	3.0	1.95	20	4	50
R1.25-M08-50-2T-BP	2	2.5	1.25	3.7	2.4	8	4	50
R1.25-M12-50-2T-BP	2	2.5	1.25	3.7	2.4	12	4	50

轉下頁
See next page

■Work Piece Table ◎ Excellent ○ Good

Work Piece											
Carbon steel	Alloy steel	Pre-hardened steel、Hardened steel ~40HRC	~50HRC	~55HRC	~68HRC	Stainless steel	Cast iron, Nodular cast iron	Copper alloy	Aluminium alloy	Titanium alloy	Heat resistant alloy
◎	◎	◎	○			○	◎				

DG

DG-2-BP / Ball / Long Neck / Short Flute / 2 Flutes
DG-2-BP兩刃直柄長頸短刃球頭立銑刀



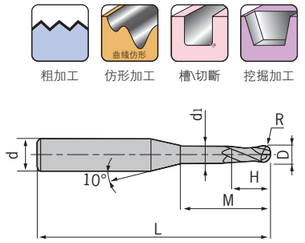

35° | Coated TiAlN | D 0 ~-0.015 | R R±0.005 R<0.5 R±0.01 R≥0.5

型號 Specification	刃數 Teeth	D	R	H	d1	M	d	L
DG- R1.25-M16-60-2T-BP	2	2.5	1.25	3.7	2.4	16	4	60
R1.25-M20-60-2T-BP	2	2.5	1.25	3.7	2.4	20	4	60
R1.5-M08-50-2T-BP	2	3.0	1.5	4.5	2.85	8	6	50
R1.5-M10-50-2T-BP	2	3.0	1.5	4.5	2.85	10	6	50
R1.5-M12-50-2T-BP	2	3.0	1.5	4.5	2.85	12	6	50
R1.5-M16-60-2T-BP	2	3.0	1.5	4.5	2.85	16	6	60
R1.5-M20-60-2T-BP	2	3.0	1.5	4.5	2.85	20	6	60
R2.0-M10-60-2T-BP	2	4.0	2.0	6.0	3.85	10	6	60
R2.0-M16-60-2T-BP	2	4.0	2.0	6.0	3.85	16	6	60
R2.0-M20-60-2T-BP	2	4.0	2.0	6.0	3.85	20	6	60
R2.0-M25-60-2T-BP	2	4.0	2.0	6.0	3.85	25	6	60
R2.5-M16-60-2T-BP	2	5.0	2.5	7.5	4.85	16	6	60
R2.5-M25-70-2T-BP	2	5.0	2.5	7.5	4.85	25	6	70

特 點 / Feature

■適用于細槽加工以及自由曲面加工。■ For rib-processing and profiling in slots.

■Work Piece Table ◎ Excellent ○ Good

Work Piece											
Carbon steel	Alloy steel	Pre-hardened steel、Hardened steel ~40HRC	~50HRC	~55HRC	~68HRC	Stainless steel	Cast iron, Nodular cast iron	Copper alloy	Aluminium alloy	Titanium alloy	Heat resistant alloy
◎	◎	◎	○			○	◎				

DG

DG-4-B / Ball / Standard / 4 Flutes
DG-4-B四刃直柄球頭立銑刀





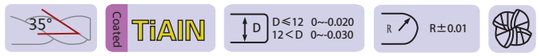

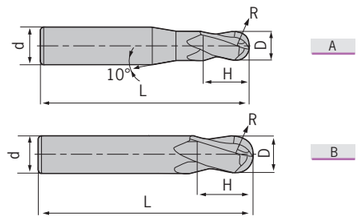

型號 Specification	刃數 Teeth	圖示 Figure	D	R	d	H	L
DG- R1.5-50-4T-B	4	A	3.0	1.5	6	6	50
R2.0-50-4T-B	4	A	4.0	2.0	6	8	50
R2.5-50-4T-B	4	A	5.0	2.5	6	10	50
R3.0-50-4T-B	4	B	6.0	3.0	6	12	50
R4.0-60-4T-B	4	B	8.0	4.0	8	16	60
R5.0-75-4T-B	4	B	10.0	5.0	10	20	75
R6.0-75-4T-B	4	B	12.0	6.0	12	24	75
R7.0-75-4T-B	4	B	14.0	7.0	14	28	75
R8.0-100-4T-B	4	B	16.0	8.0	16	32	100
R9.0-100-4T-B	4	B	18.0	9.0	18	36	100
R10.0-100-4T-B	4	B	20.0	10.0	20	40	100

特 點 / Feature

■四刃球頭銑刀可實現較高的進給速度，實現較高的切削加工效率。
■ High feed speed, High efficiency.

■Work Piece Table ◎ Excellent ○ Good

Work Piece										
Carbon steel	Alloy steel	Pre-hardened steel、Hardened steel				Stainless steel	Cast iron, Nodular cast iron	Copper alloy	Aluminium alloy	Titanium alloy	Heat resistant alloy
		~40HRC	~50HRC	~55HRC	~68HRC						
◎	◎	◎	○			○	◎				

DG

DG-4-BL / Ball / Long / 4 Flutes
DG-4-BL四刃直柄長柄球頭立銑刀





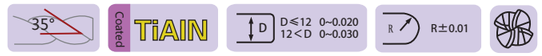

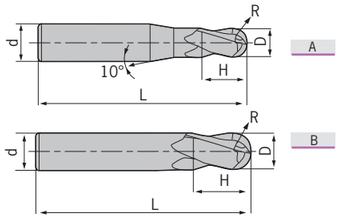

型號 Specification	刃數 Teeth	圖示 Figure	D	R	d	H	L
DG- R1.5-75-4T-BL	4	A	3.0	1.5	6	6	75
R2.0-75-4T-BL	4	A	4.0	2.0	6	8	75
R2.5-75-4T-BL	4	A	5.0	2.5	6	10	75
R3.0-75-4T-BL	4	B	6.0	3.0	6	12	75
R4.0-100-4T-BL	4	B	8.0	4.0	8	16	100
R5.0-100-4T-BL	4	B	10.0	5.0	10	20	100
R6.0-100-4T-BL	4	B	12.0	6.0	12	24	100
R7.0-100-4T-BL	4	B	14.0	7.0	14	28	100
R8.0-150-4T-BL	4	B	16.0	8.0	16	32	150
R9.0-150-4T-BL	4	B	18.0	9.0	18	36	150
R10.0-150-4T-BL	4	B	20.0	10.0	20	40	150

■Work Piece Table ◎ Excellent ○ Good

Work Piece										
Carbon steel	Alloy steel	Pre-hardened steel、Hardened steel				Stainless steel	Cast iron, Nodular cast iron	Copper alloy	Aluminium alloy	Titanium alloy	Heat resistant alloy
		~40HRC	~50HRC	~55HRC	~68HRC						
◎	◎	◎	○			○	◎				

DG

DG-2-R / Corner Radius / Standard / 2 Flutes
DG-2-R兩刃直柄圓弧立銑刀





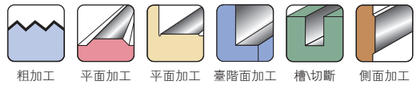

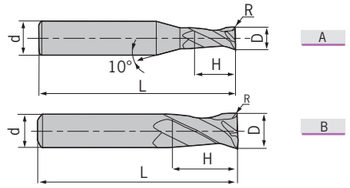

型號 Specification		刃數 Teeth	圖示 Figure	D	R	d	H	L
DG-	D1.0R0.2-50-2T-R	2	A	1.0	0.2	4	3	50
	D1.5R0.2-50-2T-R	2	A	1.5	0.2	4	4	50
	D2.0R0.2-50-2T-R	2	A	2.0	0.2	4	6	50
	D2.0R0.5-50-2T-R	2	A	2.0	0.5	4	6	50
	D2.5R0.2-50-2T-R	2	A	2.5	0.2	4	8	50
	D2.5R0.5-50-2T-R	2	A	2.5	0.5	4	8	50
	D3.0R0.2-50-2T-R	2	A	3.0	0.2	4	8	50
	D3.0R0.3-50-2T-R	2	A	3.0	0.3	4	8	50
	D3.0R0.5-50-2T-R	2	A	3.0	0.5	4	8	50
	D4.0R0.2-50-2T-R	2	B	4.0	0.2	4	11	50
	D4.0R0.3-50-2T-R	2	B	4.0	0.3	4	11	50
	D4.0R0.5-50-2T-R	2	B	4.0	0.5	4	11	50
	D4.0R1.0-50-2T-R	2	B	4.0	1.0	4	11	50
	D5.0R0.3-50-2T-R	2	A	5.0	0.3	6	13	50
	D5.0R0.5-50-2T-R	2	A	5.0	0.5	6	13	50
	D5.0R1.0-50-2T-R	2	A	5.0	1.0	6	13	50
	D6.0R0.3-50-2T-R	2	B	6.0	0.3	6	16	50
	D6.0R0.5-50-2T-R	2	B	6.0	0.5	6	16	50
	D6.0R1.0-50-2T-R	2	B	6.0	1.0	6	16	50
	D8.0R0.3-60-2T-R	2	B	8.0	0.3	8	20	60
	D8.0R0.5-60-2T-R	2	B	8.0	0.5	8	20	60
	D8.0R1.0-60-2T-R	2	B	8.0	1.0	8	20	60
	D10.0R0.5-75-2T-R	2	B	10.0	0.5	10	25	75
	D10.0R1.0-75-2T-R	2	B	10.0	1.0	10	25	75
	D10.0R1.5-75-2T-R	2	B	10.0	1.5	10	25	75
	D10.0R2.0-75-2T-R	2	B	10.0	2.0	10	25	75
	D12.0R0.5-75-2T-R	2	B	12.0	0.5	12	30	75
	D12.0R1.0-75-2T-R	2	B	12.0	1.0	12	30	75
	D12.0R1.5-75-2T-R	2	B	12.0	1.5	12	30	75
	D12.0R2.0-75-2T-R	2	B	12.0	2.0	12	30	75

■Work Piece Table ◎ Excellent ○ Good

Work Piece										
Carbon steel	Alloy steel	Pre-hardened steel、Hardened steel				Stainless steel	Cast iron, Nodular cast iron	Copper alloy	Aluminium alloy	Titanium alloy	Heat resistant alloy
		~40HRC	~50HRC	~55HRC	~68HRC						
◎	◎	◎	○			○	◎				

DG

DG-4-R / Corner Radius / Standard / 4 Flutes
DG-4-R四刃直柄圓弧立銑刀







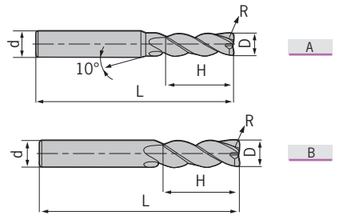

型號 Specification		刃數 Teeth	圖示 Figure	D	R	d	H	L
DG-	D3.0R0.2-50-4T-R	4	A	3.0	0.2	4	8	50
	D4.0R0.3-50-4T-R	4	B	4.0	0.3	4	10	50
	D4.0R0.5-50-4T-R	4	B	4.0	0.5	4	10	50
	D5.0R0.5-50-4T-R	4	A	5.0	0.5	6	13	50
	D5.0R1.0-50-4T-R	4	A	5.0	1.0	6	13	50
	D6.0R0.5-50-4T-R	4	B	6.0	0.5	6	16	50
	D6.0R1.0-50-4T-R	4	B	6.0	1.0	6	16	50
	D8.0R0.5-60-4T-R	4	B	8.0	0.5	8	20	60
	D8.0R1.0-60-4T-R	4	B	8.0	1.0	8	20	60
	D10.0R0.5-75-4T-R	4	B	10.0	0.5	10	25	75
	D10.0R1.0-75-4T-R	4	B	10.0	1.0	10	25	75
	D10.0R2.0-75-4T-R	4	B	10.0	2.0	10	25	75
	D10.0R3.0-75-4T-R	4	B	10.0	3.0	10	25	75
	D12.0R0.5-75-4T-R	4	B	12.0	0.5	12	30	75
	D12.0R1.0-75-4T-R	4	B	12.0	1.0	12	30	75
	D12.0R2.0-75-4T-R	4	B	12.0	2.0	12	30	75
	D12.0R3.0-75-4T-R	4	B	12.0	3.0	12	30	75

■Work Piece Table ◎ Excellent ○ Good

Work Piece										
Carbon steel	Alloy steel	Pre-hardened steel、Hardened steel				Stainless steel	Cast iron, Nodular cast iron	Copper alloy	Aluminium alloy	Titanium alloy	Heat resistant alloy
		~40HRC	~50HRC	~55HRC	~68HRC						
◎	◎	◎	○			○	◎				

DG

DG-4-RL / Corner Radius / Long / 4 Flutes
DG-4-RL四刃直柄長柄圓弧立銑刀



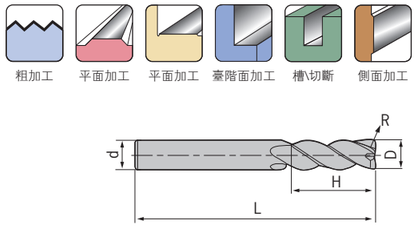

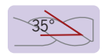

Coated TiAlN





型號 Specification		刃數 Teeth	D	R	d	H	L
DG-	D6.0R0.5-75-4T-RL	4	6.0	0.5	6	16	75
	D6.0R1.0-75-4T-RL	4	6.0	1.0	6	16	75
	D8.0R0.5-100-4T-RL	4	8.0	0.5	8	20	100
	D8.0R1.0-100-4T-RL	4	8.0	1.0	8	20	100
	D10.0R0.5-100-4T-RL	4	10.0	0.5	10	25	100
	D10.0R1.0-100-4T-RL	4	10.0	1.0	10	25	100
	D10.0R2.0-100-4T-RL	4	10.0	2.0	10	25	100
	D12.0R0.5-100-4T-RL	4	12.0	0.5	12	30	100
	D12.0R1.0-100-4T-RL	4	12.0	1.0	12	30	100
	D12.0R2.0-100-4T-RL	4	12.0	2.0	12	30	100
	D16.0R1.0-150-4T-RL	4	16.0	1.0	16	45	150
	D16.0R2.0-150-4T-RL	4	16.0	2.0	16	45	150

■Work Piece Table ◎ Excellent ○ Good

Work Piece										
Carbon steel	Alloy steel	Pre-hardened steel、Hardened steel				Stainless steel	Cast iron, Nodular cast iron	Copper alloy	Aluminium alloy	Titanium alloy	Heat resistant alloy
		~40HRC	~50HRC	~55HRC	~68HRC						
◎	◎	◎	○			○	◎				

DG

DG-4-W / Square / Standard / 4 Flutes / Waving
DG-4-W四刃直柄平頭波形刃立銑刀





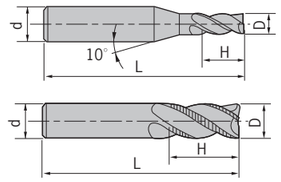

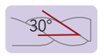

Coated TiAlN

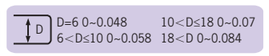



型號 Specification		刃數 Teeth	D	d	H	L	Z
DG-	D6.0-50-4T-W	4	6.0	6	16	50	4
	D7.0-60-4T-W	4	7.0	8	20	60	4
	D8.0-60-4T-W	4	8.0	8	20	60	4
	D9.0-75-4T-W	4	9.0	10	22	75	4
	D10.0-75-4T-W	4	10.0	10	25	75	4
	D11.0-75-4T-W	4	11.0	12	26	75	4
	D12.0-75-4T-W	4	12.0	12	30	75	4
	D16.0-100-4T-W	4	16.0	16	45	100	4
	D20.0-100-4T-W	4	20.0	20	45	100	4

特 點 / Feature

■最適宜高效粗加工。
■ For roughing with high efficiency.

■Work Piece Table ◎ Excellent ○ Good

Work Piece										
Carbon steel	Alloy steel	Pre-hardened steel、Hardened steel				Stainless steel	Cast iron, Nodular cast iron	Copper alloy	Aluminium alloy	Titanium alloy	Heat resistant alloy
		~40HRC	~50HRC	~55HRC	~68HRC						
◎	◎	◎	○			○	◎				

DH

DH-2-E / Square / Standard / 2 Flutes
DH-2-E兩刃直柄平頭立銑刀







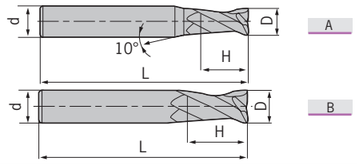

型號 Specification	刃數 Teeth	圖示 Figure	D	d	H	L
DH- D1.0S-50-2T-E	2	A	1.0	4	3	50
D1.5S-50-2T-E	2	A	1.5	4	4	50
D2.0S-50-2T-E	2	A	2.0	4	6	50
D2.5S-50-2T-E	2	A	2.5	4	8	50
D3.0S-50-2T-E	2	A	3.0	4	8	50
D4.0S-50-2T-E	2	B	4.0	4	11	50
D1.0-50-2T-E	2	A	1.0	6	3	50
D1.5-50-2T-E	2	A	1.5	6	4	50
D2.0-50-2T-E	2	A	2.0	6	6	50
D2.5-50-2T-E	2	A	2.5	6	8	50
D3.0-50-2T-E	2	A	3.0	6	8	50
D3.5-50-2T-E	2	A	3.5	6	10	50
D4.0-50-2T-E	2	A	4.0	6	11	50
D4.5-50-2T-E	2	A	4.5	6	11	50
D5.0-50-2T-E	2	A	5.0	6	13	50
D5.5-50-2T-E	2	A	5.5	6	16	50
D6.0-50-2T-E	2	B	6.0	6	16	50
D7.0-60-2T-E	2	A	7.0	8	20	60
D8.0-60-2T-E	2	B	8.0	8	20	60
D9.0-75-2T-E	2	A	9.0	10	22	75
D10.0-75-2T-E	2	B	10.0	10	25	75
D11.0-75-2T-E	2	A	11.0	12	26	75
D12.0-75-2T-E	2	B	12.0	12	30	75
D14.0-100-2T-E	2	B	14.0	14	32	100
D16.0-100-2T-E	2	B	16.0	16	45	100
D18.0-100-2T-E	2	B	18.0	18	45	100
D20.0-100-2T-E	2	B	20.0	20	45	100

特 點 / Feature

■適用于溝槽銑削。 ■ For milling in groove.
■最適于高速切削、幹式切削。 ■ High speed; Dry-cutting.

■Work Piece Table ◎ Excellent ○ Good

Work Piece										
Carbon steel	Alloy steel	Pre-hardened steel、Hardened steel				Stainless steel	Cast iron, Nodular cast iron	Copper alloy	Aluminium alloy	Titanium alloy	Heat resistant alloy
		~40HRC	~50HRC	~55HRC	~68HRC						
			○	◎	◎		○				

DH

DH-2-ES / Square / Micro / 2 Flutes
DH-2-ES兩刃直柄微小徑平頭立銑刀





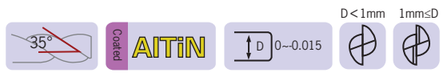

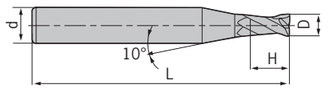

型號 Specification	刃數 Teeth	D	d	H	L
DH- D0.3-50-2T-ES	2	0.3	4	0.6	50
D0.4-50-2T-ES	2	0.4	4	0.8	50
D0.5-50-2T-ES	2	0.5	4	1.0	50
D0.6-50-2T-ES	2	0.6	4	1.2	50
D0.7-50-2T-ES	2	0.7	4	1.4	50
D0.8-50-2T-ES	2	0.8	4	1.6	50
D0.9-50-2T-ES	2	0.9	4	1.8	50
D1.0-50-2T-ES	2	1.0	4	2.0	50
D1.1-50-2T-ES	2	1.1	4	2.0	50
D1.2-50-2T-ES	2	1.2	4	2.5	50
D1.3-50-2T-ES	2	1.3	4	2.5	50
D1.4-50-2T-ES	2	1.4	4	3.0	50
D1.5-50-2T-ES	2	1.5	4	3.0	50
D1.6-50-2T-ES	2	1.6	4	3.5	50
D1.7-50-2T-ES	2	1.7	4	3.5	50
D1.8-50-2T-ES	2	1.8	4	4.0	50
D1.9-50-2T-ES	2	1.9	4	4.0	50
D2.0-50-2T-ES	2	2.0	4	4.0	50
D2.1-50-2T-ES	2	2.1	4	4.0	50
D2.2-50-2T-ES	2	2.2	4	4.5	50
D2.3-50-2T-ES	2	2.3	4	4.5	50
D2.4-50-2T-ES	2	2.4	4	5.0	50
D2.5-50-2T-ES	2	2.5	4	5.0	50
D2.6-50-2T-ES	2	2.6	4	5.0	50
D2.7-50-2T-ES	2	2.7	4	5.5	50
D2.8-50-2T-ES	2	2.8	4	5.5	50
D2.9-50-2T-ES	2	2.9	4	6.0	50
D3.0-50-2T-ES	2	3.0	4	6.0	50

特 點 / Feature

■微小徑銑刀可充分發揮加工中心高速、高精度性能，常用于電子零件等精密零件的加工。
■ High-precision performance at high speed due to micro neck diameter.

■Work Piece Table ◎ Excellent ○ Good

Work Piece										
Carbon steel	Alloy steel	Pre-hardened steel、Hardened steel				Stainless steel	Cast iron, Nodular cast iron	Copper alloy	Aluminium alloy	Titanium alloy	Heat resistant alloy
		~40HRC	~50HRC	~55HRC	~68HRC						
		○	◎	◎			○				

DH

DH-2-EP / Square / Long Neck / Short Flute / 2 Flutes
DH-2-EP兩刃直柄長頸短刃平頭立銑刀





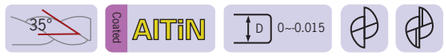

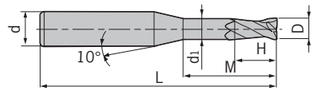

型號 Specification	刃數 Teeth	D	d	H	M	d_1	L
DH- D05-M04-50-2T-EP	2	0.5	4	0.7	4	0.45	50
D05-M06-50-2T-EP	2	0.5	4	0.7	6	0.45	50
D05-M08-50-2T-EP	2	0.5	4	0.7	8	0.45	50
D08-M04-50-2T-EP	2	0.8	4	1.2	4	0.75	50
D08-M06-50-2T-EP	2	0.8	4	1.2	6	0.75	50
D08-M08-50-2T-EP	2	0.8	4	1.2	8	0.75	50
D08-M10-50-2T-EP	2	0.8	4	1.2	10	0.75	50
D1.0-M04-50-2T-EP	2	1.0	4	1.5	4	0.95	50
D1.0-M06-50-2T-EP	2	1.0	4	1.5	6	0.95	50
D1.0-M08-50-2T-EP	2	1.0	4	1.5	8	0.95	50
D1.0-M10-50-2T-EP	2	1.0	4	1.5	10	0.95	50
D1.0-M12-50-2T-EP	2	1.0	4	1.5	12	0.95	50
D1.0-M14-50-2T-EP	2	1.0	4	1.5	14	0.95	50
D1.2-M06-50-2T-EP	2	1.2	4	1.8	6	1.15	50
D1.2-M08-50-2T-EP	2	1.2	4	1.8	8	1.15	50
D1.2-M10-50-2T-EP	2	1.2	4	1.8	10	1.15	50
D1.2-M12-50-2T-EP	2	1.2	4	1.8	12	1.15	50
D1.5-M06-50-2T-EP	2	1.5	4	2.3	6	1.45	50
D1.5-M08-50-2T-EP	2	1.5	4	2.3	8	1.45	50
D1.5-M10-50-2T-EP	2	1.5	4	2.3	10	1.45	50
D1.5-M12-50-2T-EP	2	1.5	4	2.3	12	1.45	50
D1.5-M14-50-2T-EP	2	1.5	4	2.3	14	1.45	50
D2.0-M06-50-2T-EP	2	2.0	4	3.0	6	1.95	50
D2.0-M08-50-2T-EP	2	2.0	4	3.0	8	1.95	50
D2.0-M10-50-2T-EP	2	2.0	4	3.0	10	1.95	50
D2.0-M12-50-2T-EP	2	2.0	4	3.0	12	1.95	50
D2.0-M14-50-2T-EP	2	2.0	4	3.0	14	1.95	50
D2.0-M16-50-2T-EP	2	2.0	4	3.0	16	1.95	50
D2.5-M08-50-2T-EP	2	2.5	4	3.7	8	2.4	50
D2.5-M10-50-2T-EP	2	2.5	4	3.7	10	2.4	50
D2.5-M12-50-2T-EP	2	2.5	4	3.7	12	2.4	50
D2.5-M14-50-2T-EP	2	2.5	4	3.7	14	2.4	50

轉下頁
See next page

■Work Piece Table ◎ Excellent ○ Good

Work Piece											
Carbon steel	Alloy steel	Pre-hardened steel、Hardened steel				Stainless steel	Cast iron, Nodular cast iron	Copper alloy	Aluminium alloy	Titanium alloy	Heat resistant alloy
		~40HRC	~50HRC	~55HRC	~68HRC						
			○	◎	◎		◎				

DH

DH-2-EP / Square / Long Neck / Short Flute / 2 Flutes
DH-2-EP兩刃直柄長頸短刃平頭立銑刀





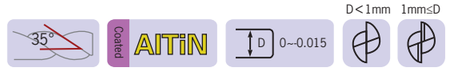

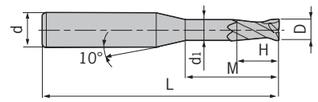

型號 Specification	刃數 Teeth	D	d	H	M	d_1	L
DH- D2.5-M16-60-2T-EP	2	2.5	4	3.7	16	2.4	60
D2.5-M18-60-2T-EP	2	2.5	4	3.7	18	2.4	60
D2.5-M20-60-2T-EP	2	2.5	4	3.7	20	2.4	60
D3.0-M06-50-2T-EP	2	3.0	6	4.5	6	2.85	50
D3.0-M08-50-2T-EP	2	3.0	6	4.5	8	2.85	50
D3.0-M10-50-2T-EP	2	3.0	6	4.5	10	2.85	50
D3.0-M12-50-2T-EP	2	3.0	6	4.5	12	2.85	50
D3.0-M14-60-2T-EP	2	3.0	6	4.5	14	2.85	60
D3.0-M16-60-2T-EP	2	3.0	6	4.5	16	2.85	60
D3.0-M18-60-2T-EP	2	3.0	6	4.5	18	2.85	60
D3.0-M20-60-2T-EP	2	3.0	6	4.5	20	2.85	60
D4.0-M12-50-2T-EP	2	4.0	6	6.0	12	3.85	50
D4.0-M16-60-2T-EP	2	4.0	6	6.0	16	3.85	60
D4.0-M20-60-2T-EP	2	4.0	6	6.0	20	3.85	60
D4.0-M25-60-2T-EP	2	4.0	6	6.0	25	3.85	60
D5.0-M16-60-2T-EP	2	5.0	6	7.5	16	4.85	60
D5.0-M25-70-2T-EP	2	5.0	6	7.5	25	4.85	70

特 點 / Feature

■適用于細槽加工或會產生幹涉的細微部分的加工。
■ For rib-processing and very fine operations without interference.

■Work Piece Table ◎ Excellent ○ Good

Work Piece											
Carbon steel	Alloy steel	Pre-hardened steel、Hardened steel				Stainless steel	Cast iron, Nodular cast iron	Copper alloy	Aluminium alloy	Titanium alloy	Heat resistant alloy
		~40HRC	~50HRC	~55HRC	~68HRC						
			○	◎	◎		○				

DH

DH-4-E / Square / Standard / 4 Flutes
DH-4-E四刃直柄平頭立銑刀







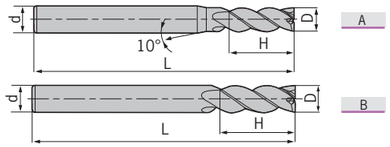

型號 Specification	刃數 Teeth	圖示 Figure	D	d	H	L
DH- D1.0S-50-4T-E	4	A	1.0	4	3	50
D1.5S-50-4T-E	4	A	1.5	4	4	50
D2.0S-50-4T-E	4	A	2.0	4	6	50
D2.5S-50-4T-E	4	A	2.5	4	8	50
D3.0S-50-4T-E	4	A	3.0	4	8	50
D4.0S-50-4T-E	4	B	4.0	4	11	50
D1.0-50-4T-E	4	A	1.0	6	3	50
D1.5-50-4T-E	4	A	1.5	6	4	50
D2.0-50-4T-E	4	A	2.0	6	6	50
D2.5-50-4T-E	4	A	2.5	6	8	50
D3.0-50-4T-E	4	A	3.0	6	8	50
D3.5-50-4T-E	4	A	3.5	6	10	50
D4.0-50-4T-E	4	A	4.0	6	11	50
D4.5-50-4T-E	4	A	4.5	6	11	50
D5.0-50-4T-E	4	A	5.0	6	13	50
D5.5-50-4T-E	4	A	5.5	6	16	50
D6.0-50-4T-E	4	B	6.0	6	16	50
D7.0-60-4T-E	4	A	7.0	8	20	60
D8.0-60-4T-E	4	B	8.0	8	20	60
D9.0-75-4T-E	4	A	9.0	10	22	75
D10.0-75-4T-E	4	B	10.0	10	25	75
D11.0-75-4T-E	4	A	11.0	12	26	75
D12.0-75-4T-E	4	B	12.0	12	30	75
D14.0-75-4T-E	4	B	14.0	14	32	75
D16.0-100-4T-E	4	B	16.0	16	45	100
D18.0-100-4T-E	4	B	18.0	18	45	100
D20.0-100-4T-E	4	B	20.0	20	45	100

特 點 / Feature

■適用于側面銑削，淺槽加工。■ For side-milling and grooving.
■最適于高速切削、幹式切削。■ High speed; Dry-cutting.

■Work Piece Table ◎ Excellent ○ Good

Work Piece										
Carbon steel	Alloy steel	Pre-hardened steel、Hardened steel ~40HRC	~50HRC	~55HRC	~68HRC	Stainless steel	Cast iron, Nodular cast iron	Copper alloy	Aluminium alloy	Titanium alloy	Heat resistant alloy
			○	◎	◎		○				

DH

DH-4-EL / Square / Long / 4 Flutes
DH-4-EL四刃直柄長刃平頭立銑刀







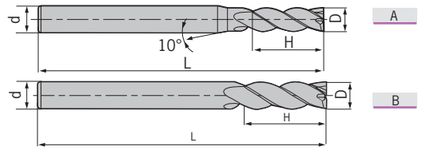

型號 Specification	刃數 Teeth	圖示 Figure	D	d	H	L
DH- D3.0-75-4T-EL	4	A	3.0	6	12	75
D4.0-75-4T-EL	4	A	4.0	6	15	75
D5.0-75-4T-EL	4	A	5.0	6	20	75
D6.0-75-4T-EL	4	B	6.0	6	20	75
D8.0-100-4T-EL	4	B	8.0	8	25	100
D10.0-100-4T-EL	4	B	10.0	10	30	100
D12.0-100-4T-EL	4	B	12.0	12	35	100
D14.0-100-4T-EL	4	B	14.0	14	40	100
D16.0-150-4T-EL	4	B	16.0	16	50	150
D20.0-150-4T-EL	4	B	20.0	20	55	150

■Work Piece Table ◎ Excellent ○ Good

Work Piece										
Carbon steel	Alloy steel	Pre-hardened steel、Hardened steel ~40HRC	~50HRC	~55HRC	~68HRC	Stainless steel	Cast iron, Nodular cast iron	Copper alloy	Aluminium alloy	Titanium alloy	Heat resistant alloy
			○	◎	◎		○				

DH

DH-6-E / Square / Standard / 6 Flutes
DH-6-E六刃直柄平頭立銑刀



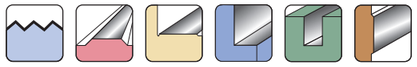



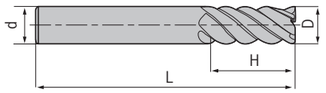

型號 Specification		刃數 Teeth	D	d	H	L
DH-	D6.0-60-6T-E	6	6.0	6	18	60
	D8.0-60-6T-E	6	8.0	8	20	60
	D10.0-75-6T-E	6	10.0	10	30	75
	D12.0-75-6T-E	6	12.0	12	32	75
	D16.0-100-6T-E	6	16.0	16	40	100
	D20.0-100-6T-E	6	20.0	20	45	100

特 點 / Feature

■刀具剛性好，能最大限度的减少側面切削時的讓刀量。
■ High working precision due to high rigidity.

■Work Piece Table ◎ Excellent ○ Good

Work Piece										
Carbon steel	Alloy steel	Pre-hardened steel、Hardened steel				Stainless steel	Cast iron, Nodular cast iron	Copper alloy	Aluminium alloy	Titanium alloy	Heat resistant alloy
		~40HRC	~50HRC	~55HRC	~68HRC						
			○	◎	◎		○				

DH

DH-6-EL / Square / Long / 6 Flutes
DH-6-EL六刃直柄長刃平頭立銑刀







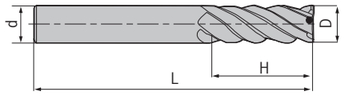

型號 Specification		刃數 Teeth	D	d	H	L
DH-	D6.0-75-6T-EL	6	6.0	6	24	75
	D8.0-75-6T-EL	6	8.0	8	32	75
	D10.0-100-6T-EL	6	10.0	10	40	100
	D12.0-100-6T-EL	6	12.0	12	45	100
	D16.0-150-6T-EL	6	16.0	16	64	150
	D20.0-150-6T-EL	6	20.0	20	75	150

■Work Piece Table ◎ Excellent ○ Good

Work piece										
Carbon steel	Alloy steel	Pre-hardened steel、Hardened steel				Stainless steel	Cast iron, Nodular cast iron	Copper alloy	Aluminium alloy	Titanium alloy	Heat resistant alloy
		~40HRC	~50HRC	~55HRC	~68HRC						
			○	◎	◎		○				

DH

DH-2-B / Ball / Standard / 2 Flutes
DH-2-B兩刃直柄球頭立銑刀





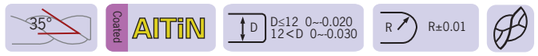

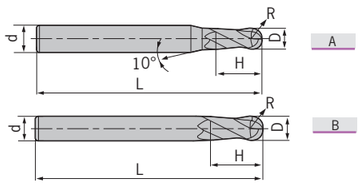

型號 Specification	刃數 Teeth	圖示 Figure	D	R	d	H	L
DH- R0.5S-50-2T-B	2	A	1.0	0.5	4	2	50
R0.75S-50-2T-B	2	A	1.5	0.75	4	3	50
R1.0S-50-2T-B	2	A	2.0	1.0	4	4	50
R1.25S-50-2T-B	2	A	2.5	1.25	4	5	50
R1.5S-50-2T-B	2	A	3.0	1.5	4	6	50
R2.0S-50-2T-B	2	B	4.0	2.0	4	8	50
R0.5-50-2T-B	2	A	1.0	0.5	6	2	50
R0.75-50-2T-B	2	A	1.5	0.75	6	3	50
R1.0-50-2T-B	2	A	2.0	1.0	6	4	50
R1.25-50-2T-B	2	A	2.5	1.25	6	5	50
R1.5-50-2T-B	2	A	3.0	1.5	6	6	50
R1.75-50-2T-B	2	A	3.5	1.75	6	8	50
R2.0-50-2T-B	2	A	4.0	2.0	6	8	50
R2.5-50-2T-B	2	A	5.0	2.5	6	10	50
R2.75-50-2T-B	2	A	5.5	2.75	6	12	50
R3.0-50-2T-B	2	B	6.0	3.0	6	12	50
R3.5-60-2T-B	2	A	7.0	3.5	8	14	60
R4.0-60-2T-B	2	B	8.0	4.0	8	16	60
R4.5-75-2T-B	2	A	9.0	4.5	10	18	75
R5.0-75-2T-B	2	B	10.0	5.0	10	20	75
R6.0-75-2T-B	2	B	12.0	6.0	12	24	75
R7.0-75-2T-B	2	B	14.0	7.0	14	28	75
R8.0-100-2T-B	2	B	16.0	8.0	16	32	100
R10.0-100-2T-B	2	B	20.0	10.0	20	40	100

特點 / Feature

■適用于仿形銑削。 ■ For profiling.
■最適于高速切削、幹式切削。 ■ High speed; Dry-cutting.

■Work Piece Table ◎ Excellent ○ Good

Work Piece											
Carbon steel	Alloy steel	Pre-hardened steel、Hardened steel				Stainless steel	Cast iron, Nodular cast iron	Copper alloy	Aluminium alloy	Titanium alloy	Heat resistant alloy
		~40HRC	~50HRC	~55HRC	~68HRC						
		○	◎	◎			○				

DH

DH-2-BL / Ball / Long / 2 Flutes
DH-2-BL兩刃直柄長柄球頭立銑刀





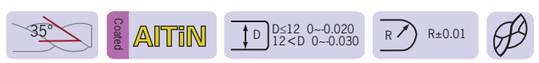

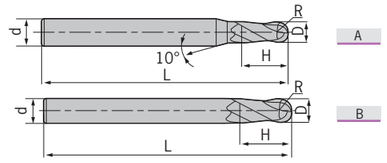

型號 Specification	刃數 Teeth	圖示 Figure	D	R	d	H	L
DH- R1.0-75-2T-BL	2	A	2.0	1.0	6	4	75
R1.25-75-2T-BL	2	A	2.5	1.25	6	5	75
R1.5-75-2T-BL	2	A	3.0	1.5	6	6	75
R1.75-75-2T-BL	2	A	3.5	1.75	6	8	75
R2.0-75-2T-BL	2	A	4.0	2.0	6	8	75
R2.5-75-2T-BL	2	A	5.0	2.5	6	10	75
R2.75-75-2T-BL	2	A	5.5	2.75	6	12	75
R3.0-75-2T-BL	2	B	6.0	3.0	6	12	75
R3.5-75-2T-BL	2	A	7.0	3.5	8	14	75
R4.0-100-2T-BL	2	B	8.0	4.0	8	16	100
R4.5-100-2T-BL	2	A	9.0	4.5	10	18	100
R5.0-100-2T-BL	2	B	10.0	5.0	10	20	100
R6.0-100-2T-BL	2	B	12.0	6.0	12	24	100
R7.0-100-2T-BL	2	B	14.0	7.0	14	28	100
R8.0-150-2T-BL	2	B	16.0	8.0	16	32	150
R10.0-150-2T-BL	2	B	20.0	10.0	20	40	150

■Work Piece Table ◎ Excellent ○ Good

Work Piece											
Carbon steel	Alloy steel	Pre-hardened steel、Hardened steel				Stainless steel	Cast iron, Nodular cast iron	Copper alloy	Aluminium alloy	Titanium alloy	Heat resistant alloy
		~40HRC	~50HRC	~55HRC	~68HRC						
		○	◎	◎			○				

DH

DH-2-BP / Ball / Long Neck / Short Flute / 2 Flutes
DH-2-BP兩刃直柄長頸短刃球頭立銑刀



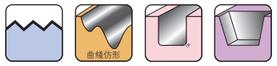

35° | Coated AlTiN | D 0~-0.015 | R R±0.005 R<0.5 R±0.01 R≥0.5

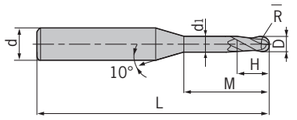

型號 Specification	刃數 Teeth	D	R	H	d1	M	d	L
DH- R0.25-M04-50-2T-BP	2	0.5	0.25	0.7	0.45	4	4	50
R0.25-M06-50-2T-BP	2	0.5	0.25	0.7	0.45	6	4	50
R0.3-M04-50-2T-BP	2	0.6	0.3	0.9	0.55	4	4	50
R0.3-M06-50-2T-BP	2	0.6	0.3	0.9	0.55	6	4	50
R0.3-M08-50-2T-BP	2	0.6	0.3	0.9	0.55	8	4	50
R0.4-M04-50-2T-BP	2	0.8	0.4	1.2	0.75	4	4	50
R0.4-M06-50-2T-BP	2	0.8	0.4	1.2	0.75	6	4	50
R0.4-M08-50-2T-BP	2	0.8	0.4	1.2	0.75	8	4	50
R0.4-M10-50-2T-BP	2	0.8	0.4	1.2	0.75	10	4	50
R0.5-M04-50-2T-BP	2	1.0	0.5	1.5	0.95	4	4	50
R0.5-M06-50-2T-BP	2	1.0	0.5	1.5	0.95	6	4	50
R0.5-M08-50-2T-BP	2	1.0	0.5	1.5	0.95	8	4	50
R0.5-M10-50-2T-BP	2	1.0	0.5	1.5	0.95	10	4	50
R0.5-M12-50-2T-BP	2	1.0	0.5	1.5	0.95	12	4	50
R0.6-M06-50-2T-BP	2	1.2	0.6	1.8	1.15	6	4	50
R0.6-M08-50-2T-BP	2	1.2	0.6	1.8	1.15	8	4	50
R0.6-M12-50-2T-BP	2	1.2	0.6	1.8	1.15	12	4	50
R0.6-M16-50-2T-BP	2	1.2	0.6	1.8	1.15	16	4	50
R0.75-M08-50-2T-BP	2	1.5	0.75	2.3	1.45	8	4	50
R0.75-M12-50-2T-BP	2	1.5	0.75	2.3	1.45	12	4	50
R0.75-M16-50-2T-BP	2	1.5	0.75	2.3	1.45	16	4	50
R1.0-M06-50-2T-BP	2	2.0	1.0	3.0	1.95	6	4	50
R1.0-M08-50-2T-BP	2	2.0	1.0	3.0	1.95	8	4	50
R1.0-M10-50-2T-BP	2	2.0	1.0	3.0	1.95	10	4	50
R1.0-M12-50-2T-BP	2	2.0	1.0	3.0	1.95	12	4	50
R1.0-M16-50-2T-BP	2	2.0	1.0	3.0	1.95	16	4	50
R1.0-M20-50-2T-BP	2	2.0	1.0	3.0	1.95	20	4	50
R1.25-M08-50-2T-BP	2	2.5	1.25	3.7	2.4	8	4	50
R1.25-M12-50-2T-BP	2	2.5	1.25	3.7	2.4	12	4	50
R1.25-M16-60-2T-BP	2	2.5	1.25	3.7	2.4	16	4	60
R1.25-M20-60-2T-BP	2	2.5	1.25	3.7	2.4	20	4	60

轉下頁
See next page

■Work Piece Table ◎ Excellent ○ Good

Work Piece										
Carbon steel	Alloy steel	Pre-hardened steel、Hardened steel				Stainless steel	Cast iron, Nodular cast iron	Copper alloy	Aluminium alloy	Titanium alloy	Heat resistant alloy
		~40HRC	~50HRC	~55HRC	~68HRC						
			○	◎	◎		○				

DH
DH-2-BP / Ball / Long Neck / Short Flute / 2 Flutes
DH-2-BP兩刃直柄長頸短刃球頭立銑刀





35° | Coated AlTiN | D 0~-0.015 | R R±0.005 R<0.5 R±0.01 R≥0.5

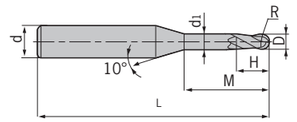

型號 Specification	刃數 Teeth	D	R	H	d1	M	d	L
DH- R1.5-M08-50-2T-BP	2	3.0	1.5	4.5	2.85	8	6	50
R1.5-M10-50-2T-BP	2	3.0	1.5	4.5	2.85	10	6	50
R1.5-M12-50-2T-BP	2	3.0	1.5	4.5	2.85	12	6	50
R1.5-M16-60-2T-BP	2	3.0	1.5	4.5	2.85	16	6	60
R1.5-M20-60-2T-BP	2	3.0	1.5	4.5	2.85	20	6	60
R2.0-M10-60-2T-BP	2	4.0	2.0	6.0	3.85	10	6	60
R2.0-M16-60-2T-BP	2	4.0	2.0	6.0	3.85	16	6	60
R2.0-M20-60-2T-BP	2	4.0	2.0	6.0	3.85	20	6	60
R2.0-M25-60-2T-BP	2	4.0	2.0	6.0	3.85	25	6	60
R2.5-M16-60-2T-BP	2	5.0	2.5	7.5	4.85	16	6	60
R2.5-M25-70-2T-BP	2	5.0	2.5	7.5	4.85	25	6	70

特 點 / Feature

■適用于細槽加工及自由曲面加工。 ■ For rib-processing and profiling.

■Work Piece Table ◎ Excellent ○ Good

Work Piece										
Carbon steel	Alloy steel	Pre-hardened steel、Hardened steel				Stainless steel	Cast iron, Nodular cast iron	Copper alloy	Aluminium alloy	Titanium alloy	Heat resistant alloy
		~40HRC	~50HRC	~55HRC	~68HRC						
			○	◎	◎		○				

DH

DH-2-BS / Ball / Micro / 2 Flutes
DH-2-BS兩刃直柄微小徑球頭立銑刀



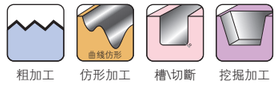

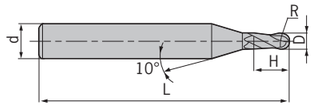

35° | Coated AlTiN | D 0~0.015 | R R±0.005 R<0.5 R±0.01 R≥0.5

型號 Specification	刃數 Teeth	D	R	d	H	L
DH- R0.15-50-2T-BS	2	0.30	0.15	4	0.5	50
R0.20-50-2T-BS	2	0.40	0.20	4	0.6	50
R0.25-50-2T-BS	2	0.50	0.25	4	0.8	50
R0.30-50-2T-BS	2	0.60	0.30	4	0.9	50
R0.35-50-2T-BS	2	0.70	0.35	4	1.0	50
R0.40-50-2T-BS	2	0.80	0.40	4	1.2	50
R0.45-50-2T-BS	2	0.90	0.45	4	1.3	50
R0.50-50-2T-BS	2	1.00	0.50	4	1.5	50
R0.60-50-2T-BS	2	1.20	0.60	4	1.8	50
R0.70-50-2T-BS	2	1.40	0.70	4	2.0	50
R0.75-50-2T-BS	2	1.50	0.75	4	2.3	50
R0.80-50-2T-BS	2	1.60	0.80	4	2.5	50
R0.90-50-2T-BS	2	1.80	0.90	4	2.7	50
R1.00-50-2T-BS	2	2.00	1.00	4	3.0	50
R1.25-50-2T-BS	2	2.50	1.25	4	3.7	50
R1.50-50-2T-BS	2	3.00	1.50	4	4.5	50

特 點 / Feature

■微小徑銑刀可充分發揮加工中心高速、高精度性能，常用于電子零件等精密零件的加工。
■ High-precision performance at high speed due to micro diameter of flutes.

■Work Piece Table ◎ Excellent ○ Good

Work Piece										
Carbon steel	Alloy steel	Pre-hardened steel、Hardened steel				Stainless steel	Cast iron, Nodular cast iron	Copper alloy	Aluminium alloy	Titanium alloy	Heat resistant alloy
		~40HRC	~50HRC	~55HRC	~68HRC						
		○	◎	◎			○				

DH

DH-4-B / Ball / Standard / 4 Flutes
DH-4-B四刃直柄球頭立銑刀



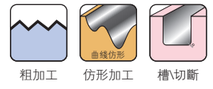

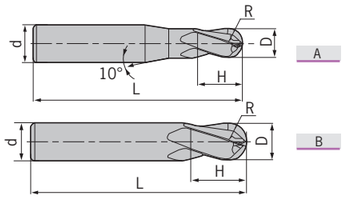

35° | Coated AlTiN | D D≤12 0~0.020 12<D 0~0.030 | R R±0.01

型號 Specification	刃數 Teeth	圖示 Figure	D	R	d	H	L
DH- R1.5-50-4T-B	4	A	3.0	1.5	6	6	50
R2.0-50-4T-B	4	A	4.0	2.0	6	8	50
R2.5-50-4T-B	4	A	5.0	2.5	6	10	50
R3.0-50-4T-B	4	B	6.0	3.0	6	12	50
R4.0-60-4T-B	4	B	8.0	4.0	8	16	60
R5.0-75-4T-B	4	B	10.0	5.0	10	20	75
R6.0-75-4T-B	4	B	12.0	6.0	12	24	75
R7.0-75-4T-B	4	B	14.0	7.0	14	28	75
R8.0-100-4T-B	4	B	16.0	8.0	16	32	100
R9.0-100-4T-B	4	B	18.0	9.0	18	36	100
R10.0-100-4T-B	4	B	20.0	10.0	20	40	100

特 點 / Feature

■四刃球頭銑刀可實現較高的進給速度，提高加工效率，在高硬度材料加工中實現較長的使用壽命。
■ High feed speed; High efficiency; Long tool life.

■Work Piece Table ◎ Excellent ○ Good

Work Piece										
Carbon steel	Alloy steel	Pre-hardened steel、Hardened steel				Stainless steel	Cast iron, Nodular cast iron	Copper alloy	Aluminium alloy	Titanium alloy	Heat resistant alloy
		~40HRC	~50HRC	~55HRC	~68HRC						
			○	◎	◎		○				

DH

DH-4-R / Corner Radius / Standard / 4 Flutes
DH-4-R四刃直柄圓弧立銑刀



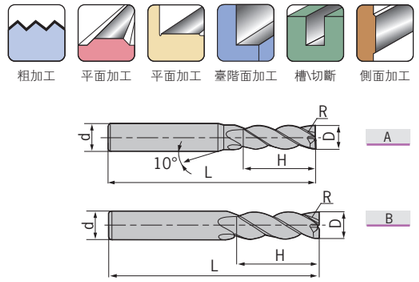

35° | Coated AlTiN | D 0~0.020

型號 Specification	刃數 Teeth	圖示 Figure	D	R	d	H	L
DH- D3.0R0.2-50-4T-R	4	A	3.0	0.2	4	8	50
D4.0R0.3-50-4T-R	4	B	4.0	0.3	4	10	50
D4.0R0.5-50-4T-R	4	B	4.0	0.5	4	10	50
D5.0R0.5-50-4T-R	4	A	5.0	0.5	6	13	50
D5.0R1.0-50-4T-R	4	A	5.0	1.0	6	13	50
D6.0R0.5-50-4T-R	4	B	6.0	0.5	6	16	50
D6.0R1.0-50-4T-R	4	B	6.0	1.0	6	16	50
D8.0R0.5-60-4T-R	4	B	8.0	0.5	8	20	60
D8.0R1.0-60-4T-R	4	B	8.0	1.0	8	20	60
D10.0R0.5-75-4T-R	4	B	10.0	0.5	10	25	75
D10.0R1.0-75-4T-R	4	B	10.0	1.0	10	25	75
D10.0R2.0-75-4T-R	4	B	10.0	2.0	10	25	75
D10.0R3.0-75-4T-R	4	B	10.0	3.0	10	25	75
D12.0R0.5-75-4T-R	4	B	12.0	0.5	12	30	75
D12.0R1.0-75-4T-R	4	B	12.0	1.0	12	30	75
D12.0R2.0-75-4T-R	4	B	12.0	2.0	12	30	75
D12.0R3.0-75-4T-R	4	B	12.0	3.0	12	30	75

■Work Piece Table ◎ Excellent ○ Good

Work Piece										
Carbon steel	Alloy steel	Pre-hardened steel、Hardened steel				Stainless steel	Cast iron, Nodular cast iron	Copper alloy	Aluminium alloy	Titanium alloy	Heat resistant alloy
		~40HRC	~50HRC	~55HRC	~68HRC						
		○	◎	◎			○				

DH

DH-4-RF / Corner Radius / Short Flute / 4 Flutes
DH-4-RF四刃直柄短刃圓弧立銑刀



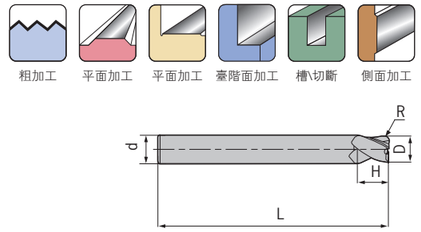

35° | Coated AlTiN | D 0~0.020

型號 Specification	刃數 Teeth	D	R	d	H	L
DH- D6.0R0.5-50-4T-RF	4	6.0	0.5	6	6	50
D6.0R1.0-50-4T-RF	4	6.0	1.0	6	6	50
D8.0R0.5-60-4T-RF	4	8.0	0.5	8	8	60
D8.0R1.0-60-4T-RF	4	8.0	1.0	8	8	60
D10.0R0.5-75-4T-RF	4	10.0	0.5	10	10	75
D10.0R1.0-75-4T-RF	4	10.0	1.0	10	10	75
D10.0R2.0-75-4T-RF	4	10.0	2.0	10	10	75
D12.0R0.5-75-4T-RF	4	12.0	0.5	12	12	75
D12.0R1.0-75-4T-RF	4	12.0	1.0	12	12	75
D12.0R2.0-75-4T-RF	4	12.0	2.0	12	12	75

特 點 / Feature

■高剛性短刃型設計，可進行高速、大進給切削。 ■ High rigidity and short flute for high-feed at high speed.

■Work Piece Table ◎ Excellent ○ Good

Work Piece										
Carbon steel	Alloy steel	Pre-hardened steel、Hardened steel				Stainless steel	Cast iron, Nodular cast iron	Copper alloy	Aluminium alloy	Titanium alloy	Heat resistant alloy
		~40HRC	~50HRC	~55HRC	~68HRC						
			○	◎	◎		○				

DH

DH-4-RP / Corner Radius / Long Neck / Short Flute / 4 Flutes
DH-4-RP四刃直柄長頸短刃圓弧立銑刀







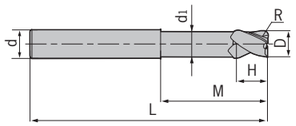

型號 Specification	刃數 Teeth	D	R	d	d_1	H	L
DH- D6.0R0.5-75-4T-RP	4	6.0	0.5	6	5.8	6	75
D6.0R1.0-75-4T-RP	4	6.0	1.0	6	5.8	6	75
D8.0R0.5-100-4T-RP	4	8.0	0.5	8	7.8	8	100
D8.0R1.0-100-4T-RP	4	8.0	1.0	8	7.8	8	100
D10.0R0.5-100-4T-RP	4	10.0	0.5	10	9.6	10	100
D10.0R1.0-100-4T-RP	4	10.0	1.0	10	9.6	10	100
D10.0R2.0-100-4T-RP	4	10.0	2.0	10	9.6	10	100
D12.0R0.5-100-4T-RP	4	12.0	0.5	12	11.5	12	100
D12.0R1.0-100-4T-RP	4	12.0	1.0	12	11.5	12	100
D12.0R2.0-100-4T-RP	4	12.0	2.0	12	11.5	12	100
D16.0R1.0-150-4T-RP	4	16.0	1.0	16	15.5	16	150
D16.0R2.0-150-4T-RP	4	16.0	2.0	16	15.5	16	150

特 點 / Feature

■長柄短刃設計，適用于深型腔的銑削加工。 ■ Long shank and short flute for deep pocket-milling.

■Work Piece Table ◎ Excellent ○ Good

Work Piece											
Carbon steel	Alloy steel	Pre-hardened steel、Hardened steel				Stainless steel	Cast iron, Nodular cast iron	Copper alloy	Aluminium alloy	Titanium alloy	Heat resistant alloy
		~40HRC	~50HRC	~55HRC	~68HRC						
			○	◎	◎		○				

DL

DL-2-E / Square / Standard / 2 Flutes
DL-2-E兩刃直柄平頭立銑刀







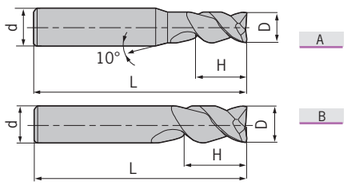

型號 Specification	刃數 Teeth	圖示 Figure	D	d	H	L
DL- D1.0-50-2T-E	2	A	1.0	4	3	50
D1.5-50-2T-E	2	A	1.5	4	4	50
D2.0-50-2T-E	2	A	2.0	4	6	50
D2.5-50-2T-E	2	A	2.5	4	7	50
D3.0-50-2T-E	2	A	3.0	6	9	50
D4.0-50-2T-E	2	A	4.0	6	12	50
D5.0-50-2T-E	2	A	5.0	6	15	50
D6.0-60-2T-E	2	B	6.0	6	18	60
D8.0-60-2T-E	2	B	8.0	8	20	60
D10.0-75-2T-E	2	B	10.0	10	30	75
D12.0-75-2T-E	2	B	12.0	12	32	75
D16.0-100-2T-E	2	B	16.0	16	45	100
D20.0-100-2T-E	2	B	20.0	20	45	100

特 點 / Feature

■排屑性能良好，可進行高效率加工 。 ■ Excellent chip evacuation and high efficiency.

■Work Piece Table ◎ Excellent ○ Good

Work Piece											
Carbon steel	Alloy steel	Pre-hardened steel、Hardened steel				Stainless steel	Cast iron, Nodular cast iron	Copper alloy	Aluminium alloy	Titanium alloy	Heat resistant alloy
		~40HRC	~50HRC	~55HRC	~68HRC						
									◎		

DL

DL-2-EL / Square / Long / 2 Flutes
DL-2-EL兩刃直柄長刃平頭立銑刀





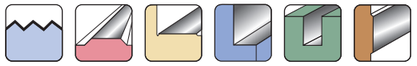

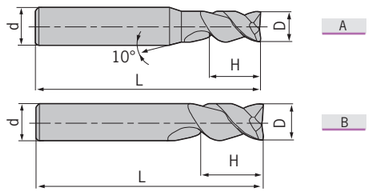

型號 Specification	刃數 Teeth	圖示 Figure	D	d	H	L
DL- D3.0-60-2T-EL	2	A	3.0	6	12	60
D4.0-60-2T-EL	2	A	4.0	6	16	60
D5.0-60-2T-EL	2	A	5.0	6	20	60
D6.0-75-2T-EL	2	B	6.0	6	25	75
D8.0-75-2T-EL	2	B	8.0	8	32	75
D10.0-100-2T-EL	2	B	10.0	10	45	100
D12.0-100-2T-EL	2	B	12.0	12	45	100
D16.0-150-2T-EL	2	B	16.0	16	65	150
D20.0-150-2T-EL	2	B	20.0	20	75	150

■Work Piece Table ◎ Excellent ○ Good

Work Piece									
Carbon steel	Alloy steel	Pre-hardened steel、Hardened steel				Stainless steel	Cast iron, Nodular cast iron	Copper alloy	Aluminium alloy	Titanium alloy	Heat resistant alloy
		~40HRC	~50HRC	~55HRC	~68HRC						
									◎		

DL

DL-3-E / Square / Standard / 3 Flutes
DL-3-E三刃直柄平頭立銑刀



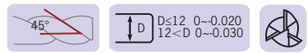



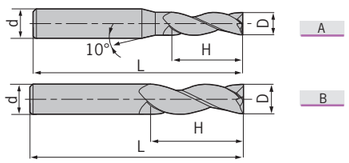

型號 Specification	刃數 Teeth	圖示 Figure	D	d	H	L
DL- D1.0-50-3T-E	3	A	1.0	4	3	50
D1.5-50-3T-E	3	A	1.5	4	4	50
D2.0-50-3T-E	3	A	2.0	4	6	50
D2.5-50-3T-E	3	A	2.5	4	7	50
D3.0-50-3T-E	3	A	3.0	6	9	50
D4.0-50-3T-E	3	A	4.0	6	12	50
D5.0-50-3T-E	3	A	5.0	6	15	50
D6.0-60-3T-E	3	B	6.0	6	18	60
D8.0-60-3T-E	3	B	8.0	8	20	60
D10.0-75-3T-E	3	B	10.0	10	30	75
D12.0-75-3T-E	3	B	12.0	12	32	75
D16.0-100-3T-E	3	B	16.0	16	45	100
D20.0-100-3T-E	3	B	20.0	20	45	100

特 點 / Feature

■切削性能優异，無顫振，可實現高精度的加工。 ■ Excellent cutting performance; Zero-shaking; High precision.

■Work Piece Table ◎ Excellent ○ Good

Work Piece									
Carbon steel	Alloy steel	Pre-hardened steel、Hardened steel				Stainless steel	Cast iron, Nodular cast iron	Copper alloy	Aluminium alloy	Titanium alloy	Heat resistant alloy
		~40HRC	~50HRC	~55HRC	~68HRC						
									◎		

DL

DL-3-EL / Square / Long / 3 Flutes
DL-3-EL三刃直柄長刃平頭立銑刀







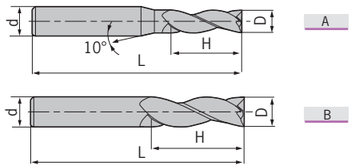

型號 Specification	刃數 Teeth	圖示 Figure	D	d	H	L
DL- **D3.0-60-3T-EL**	3	A	3.0	6	12	60
D4.0-60-3T-EL	3	A	4.0	6	16	60
D5.0-60-3T-EL	3	A	5.0	6	20	60
D6.0-75-3T-EL	3	B	6.0	6	25	75
D8.0-75-3T-EL	3	B	8.0	8	32	75
D10.0-100-3T-EL	3	B	10.0	10	45	100
D12.0-100-3T-EL	3	B	12.0	12	45	100
D16.0-150-3T-EL	3	B	16.0	16	65	150
D20.0-150-3T-EL	3	B	20.0	20	75	150

■Work Piece Table ◎ Excellent ○ Good

Work Piece										
Carbon steel	Alloy steel	Pre-hardened steel、Hardened steel				Stainless steel	Cast iron, Nodular cast iron	Copper alloy	Aluminium alloy	Titanium alloy	Heat resistant alloy
		~40HRC	~50HRC	~55HRC	~68HRC						
									◎		

DL

DL-2-B / Ball / Standard / 2 Flutes
DL-2-B兩刃直柄球頭立銑刀







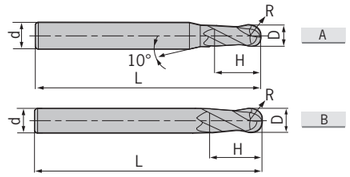

型號 Specification	刃數 Teeth	圖示 Figure	D	R	d	H	L
DL- **R1.0-60-2T-B**	2	A	2.0	1.0	6	4	60
R1.5-60-2T-B	2	A	3.0	1.5	6	6	60
R2.0-60-2T-B	2	A	4.0	2.0	6	8	60
R2.5-60-2T-B	2	A	5.0	2.5	6	10	60
R3.0-60-2T-B	2	B	6.0	3.0	6	12	60
R4.0-75-2T-B	2	B	8.0	4.0	8	16	75
R5.0-75-2T-B	2	B	10.0	5.0	10	20	75
R6.0-75-2T-B	2	B	12.0	6.0	12	24	75

特 點 / Feature

■適用于鋁合金的仿形銑削。■ For profiling.

■Work Piece Table ◎ Excellent ○ Good

Work Piece										
Carbon steel	Alloy steel	Pre-hardened steel、Hardened steel				Stainless steel	Cast iron, Nodular cast iron	Copper alloy	Aluminium alloy	Titanium alloy	Heat resistant alloy
		~40HRC	~50HRC	~55HRC	~68HRC						
									◎		

DL

DL-3-W / Square / Standard / 3 Flutes / Waving
DL-3-W三刃直柄平頭波形立銑刀







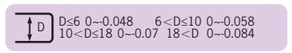



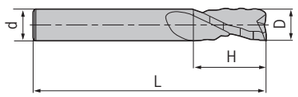

型號 Specification		刃數 Teeth	D	d	H	L
DL-	D6.0-50-3T-W	3	6.0	6	16	50
	D8.0-60-3T-W	3	8.0	8	20	60
	D10.0-75-3T-W	3	10.0	10	25	75
	D12.0-75-3T-W	3	12.0	12	30	75
	D16.0-100-3T-W	3	16.0	16	45	100
	D20.0-100-3T-W	3	20.0	20	45	100

特 點 / Feature

■適用于鋁合金的粗加工。■For roughing.

■Work Piece Table ◎ Excellent ○ Good

Work Piece									
Carbon steel	Alloy steel	Pre-hardened steel、Hardened steel				Stainless steel	Cast iron, Nodular cast iron	Copper alloy	Aluminium alloy	Titanium alloy	Heat resistant alloy
		~40HRC	~50HRC	~55HRC	~68HRC						
									◎		

DATA

Technical Data
技術支持

DP-2-E & DP-2-EL

被削材 Work Piece	鑄鐵/碳素鋼/合金鋼 Cast Iron/Carbon Steel/Alloy Steel ~ 30HRC		不銹鋼 Stainless Steel		預硬鋼/調制鋼 Pre-hardened Steel/Hardened Steel ~ 40HRC		預硬鋼/調制鋼 Pre-hardened Steel/Hardened Steel ~50HRC		淬硬鋼 Hardened Steel ~55HRC	
D mm	回轉數 No Load RPM min⁻¹	進給速度 Feed Speed mm/min	回轉數 No Load RPM min⁻¹	進給速度 Feed Speed mm/min	回轉數 No Load RPM min⁻¹	進給速度 Feed Speed mm/min	回轉數 No Load RPM min⁻¹	進給速度 Feed Speed mm/min	回轉數 No Load RPM min⁻¹	進給速度 Feed Speed mm/min
1	20000	200	20000	60	20000	165	20000	120	20000	90
2	15000	320	11150	85	15000	285	13000	180	11140	130
3	14000	545	7500	120	10600	420	8500	330	7430	240
4	10800	560	5500	135	8000	425	6500	335	5570	245
5	8200	585	4500	135	6400	445	5000	355	4460	260
6	7000	600	3700	140	5300	465	4200	260	3710	260
8	5200	595	2800	140	4000	455	3200	365	2785	270
10	4200	585	2200	140	3200	445	2500	350	2230	250
12	3500	585	1850	140	2650	445	2100	350	1855	250
14	3000	545	1600	135	2300	420	1800	330	1590	240
16	2600	545	1400	120	2000	420	1600	330	1390	240
18	2300	535	1250	120	1800	415	1400	325	1240	235
20	2050	535	1100	120	1600	415	1250	325	1115	235

DP-4-G-E & DP-4-G-EL（普通加工）

被削材 Work Piece	鑄鐵/碳素鋼/合金鋼 Cast Iron/Carbon Steel/Alloy Steel ~ 30HRC		不銹鋼 Stainless Steel		預硬鋼/調制鋼 Pre-hardened Steel/Hardened Steel ~ 40HRC		預硬鋼/調制鋼 Pre-hardened Steel/Hardened Steel ~50HRC		淬硬鋼 Hardened Steel ~55HRC	
D mm	回轉數 No Load RPM min⁻¹	進給速度 Feed Speed mm/min	回轉數 No Load RPM min⁻¹	進給速度 Feed Speed mm/min	回轉數 No Load RPM min⁻¹	進給速度 Feed Speed mm/min	回轉數 No Load RPM min⁻¹	進給速度 Feed Speed mm/min	回轉數 No Load RPM min⁻¹	進給速度 Feed Speed mm/min
1	20000	270	20000	95	20000	215	2000	135	20000	120
2	15000	435	11150	110	15000	380	13000	200	11140	175
3	14000	735	7500	135	10600	565	8500	370	7430	325
4	10800	755	5500	140	8000	575	6500	380	5570	335
5	8200	795	4500	140	6400	605	5000	400	4460	350
6	7000	810	3700	145	5300	620	4200	405	3710	350
8	5200	800	2800	145	4000	615	3200	415	2785	365
10	4200	795	2200	145	3200	605	2500	390	2230	340
12	3500	795	1850	145	2650	605	2100	390	1855	340
14	3000	735	1600	140	2300	565	1800	370	1590	325
16	2600	735	1400	135	2000	565	1600	370	1390	325
18	2300	720	1250	115	1800	555	1400	365	1240	315
20	2050	720	1100	115	1600	555	1250	365	1115	315

DATA

Technical Data
技術支持

DP-4-G-E & DP-4-G-EL（高速側銑加工) Profiling At High Speed

被削材 Work Piece	鑄鐵/碳素鋼/合金鋼 Cast Iron/Carbon Steel/Alloy Steel ~ 30HRC		碳素鋼/合金鋼 Steel/Alloy Steel ~ 40HRC		預硬鋼/調制鋼 Pre-hardened Steel/Hardened Steel ~ 45HRC		預硬鋼/調制鋼 Pre-hardened Steel/Hardened Steel ~50HRC		淬硬鋼 Hardened Steel ~55HRC	
切削速度 (Cutting Speed)	300m/min		250m/min		200m/min		150m/min		100m/min	
D mm	回轉數 No Load RPM min^{-1}	進給速度 Feed Speed mm/min	回轉數 No Load RPM min^{-1}	進給速度 Feed Speed mm/min	回轉數 No Load RPM min^{-1}	進給速度 Feed Speed mm/min	回轉數 No Load RPM min^{-1}	進給速度 Feed Speed mm/min	回轉數 No Load RPM min^{-1}	進給速度 Feed Speed mm/min
6	15915	1535	13260	1280	10600	1020	7960	765	5300	515
8	11935	1530	9950	1260	7960	1020	5970	765	3980	515
10	9550	1450	7960	1245	6370	1000	4775	750	3180	495
12	7960	1450	6630	1245	5300	1000	3980	750	2650	495
14	6820	1390	5685	1160	4550	930	3410	810	2275	465
16	5970	1390	4975	1160	3980	930	2985	810	1990	465
18	5305	1390	4420	1160	3540	930	2650	810	1770	465
20	4775	1390	3980	1160	3180	930	2390	810	1590	465

DP-4-E & DP-4-EL（普通加工）

被削材 Work Piece	鑄鐵/碳素鋼/合金鋼 Cast Iron/Carbon Steel/Alloy Steel ~ 30HRC		不銹鋼 Stainless Steel		預硬鋼/調制鋼 Pre-hardened Steel/Hardened Steel ~ 40HRC		預硬鋼/調制鋼 Pre-hardened Steel/Hardened Steel ~50HRC		淬硬鋼 Hardened Steel ~55HRC	
D mm	回轉數 No Load RPM min^{-1}	進給速度 Feed Speed mm/min	回轉數 No Load RPM min^{-1}	進給速度 Feed Speed mm/min	回轉數 No Load RPM min^{-1}	進給速度 Feed Speed mm/min	回轉數 No Load RPM min^{-1}	進給速度 Feed Speed mm/min	回轉數 No Load RPM min^{-1}	進給速度 Feed Speed mm/min
1	20000	300	20000	108	20000	240	20000	180	20000	135
2	15000	480	11150	120	15000	420	13000	270	11140	195
3	14000	815	7500	145	10600	630	8500	495	7430	360
4	10800	840	5500	150	8000	645	6500	505	5570	370
5	8200	875	4500	150	6400	675	5000	530	4460	390
6	7000	900	3700	165	5300	690	4200	540	3710	390
8	5200	890	2800	165	4000	680	3200	555	2785	405
10	4200	875	2200	165	3200	675	2500	525	2230	375
12	3500	875	1850	165	2650	675	2100	525	1855	375
14	3000	815	1600	150	2300	630	1800	495	1590	360
16	2600	815	1400	145	2000	630	1600	495	1390	360
18	2300	805	1250	125	1800	620	1400	485	1240	350
20	2050	805	1100	125	1600	620	1250	485	1115	350

DATA

Technical Data
技術支持

DP-4-E & DP-4-EL（高速側銑加工）Profiling At High Speed

被削材 Work Piece	鑄鐵/碳素鋼/合金鋼 Cast Iron/Carbon Steel/Alloy Steel ~ 30HRC		不銹鋼 Stainless Steel		預硬鋼/調制鋼 Pre-hardened Steel/Hardened Steel ~ 40HRC		預硬鋼/調制鋼 Pre-hardened Steel/Hardened Steel ~50HRC		淬硬鋼 Hardened Steel ~55HRC	
D mm	回轉數 No Load RPM min^{-1}	進給速度 Feed Speed mm/min	回轉數 No Load RPM min^{-1}	進給速度 Feed Speed mm/min	回轉數 No Load RPM min^{-1}	進給速度 Feed Speed mm/min	回轉數 No Load RPM min^{-1}	進給速度 Feed Speed mm/min	回轉數 No Load RPM min^{-1}	進給速度 Feed Speed mm/min
6	15915	1705	13260	1420	10600	1135	7960	850	5300	570
8	11935	1700	9950	1400	7960	1130	5970	850	3980	570
10	9550	1660	7960	1380	6370	1110	4775	830	3180	550
12	7960	1660	6630	1380	5300	1110	3980	830	2650	550
14	6820	1545	5685	1290	4550	1030	3410	900	2275	515
16	5970	1545	4975	1290	3980	1030	2985	900	1990	515
18	5305	1545	4420	1290	3540	1030	2650	900	1770	515
20	4775	1545	3980	1290	3180	1030	2390	900	1590	515

DP-2-B & DP-2-BL（高速切削）Cutting At High Speed

被削材 Work Piece	鑄鐵/碳素鋼/合金鋼 Cast Iron/Carbon Steel/Alloy Steel ~ 30HRC		預硬鋼/調制鋼 Pre-hardened Steel/Hardened Steel ~ 40HRC		預硬鋼/調制鋼 Pre-hardened Steel/Hardened Steel ~ 45HRC		預硬鋼/調制鋼 Pre-hardened Steel/Hardened Steel ~50HRC		淬硬鋼 Hardened Steel ~55HRC	
D mm	回轉數 No Load RPM min^{-1}	進給速度 Feed Speed mm/min	回轉數 No Load RPM min^{-1}	進給速度 Feed Speed mm/min	回轉數 No Load RPM min^{-1}	進給速度 Feed Speed mm/min	回轉數 No Load RPM min^{-1}	進給速度 Feed Speed mm/min	回轉數 No Load RPM min^{-1}	進給速度 Feed Speed mm/min
R3.0	15000	4800	11500	2750	9500	2250	7960	1885	6370	1510
R4.0	11500	3650	8950	2100	7150	1700	5970	1420	4775	1135
R5.0	9500	3000	7150	1700	5700	1350	4775	1130	3820	905
R6.0	7950	2500	5950	1400	4750	1100	3980	920	3180	735
R8.0	5950	1900	4450	1050	3550	850	2985	760	2390	610
R10.0	4750	1500	3550	850	2850	680	2390	570	1910	455

DP-4-B & DP-4-BL

被削材	鑄鐵/球墨鑄鐵 Cast Iron/Ball Cast Iron		不銹鋼 Stainless Steel		碳素鋼/合金鋼 Carbon Steel/Alloy Steel ~30HRC		預硬鋼/調制鋼 Pre-hardened Steel/Hardened Steel ~40HRC		預硬鋼/調制鋼 Pre-hardened Steel/Hardened Steel ~50HRC	
D mm	回轉數 No Load RPM min^{-1}	進給速度 Feed Speed mm/min	回轉數 No Load RPM min^{-1}	進給速度 Feed Speed mm/min	回轉數 No Load RPM min^{-1}	進給速度 Feed Speed mm/min	回轉數 No Load RPM min^{-1}	進給速度 Feed Speed mm/min	回轉數 No Load RPM min^{-1}	進給速度 Feed Speed mm/min
R1.5	15500	2055	7400	625	10600	975	8500	600	7430	525
R2.0	11500	2055	5550	795	8000	1190	6500	800	5570	685
R2.5	9500	2270	4450	795	6400	1190	5000	810	4455	720
R3.0	8000	2270	3700	840	5300	1245	4200	840	3715	745
R4.0	6000	2810	2750	985	4000	1515	3200	950	2785	825
R5.0	4800	2595	2200	925	3200	1405	2500	950	2230	825
R6.0	4000	2375	1850	925	2650	1320	2100	905	1855	800
R8.0	3000	2270	1350	815	2000	1295	1600	810	1395	705
R10.0	2400	2055	1100	795	1600	1200	1250	715	1115	740

DATA

Technical Data
技術支持

DP-2-R

被削材 Work Piece	碳素鋼/合金鋼 Carbon Steel/Alloy Steel ~ 30HRC		不銹鋼 Stainless Steel		預硬鋼/調制鋼 Pre-hardened Steel/Hardened Steel ~ 45HRC		預硬鋼/調制鋼 Pre-hardened Steel/Hardened Steel ~ 50HRC		淬硬鋼 Hardened Steel ~55HRC	
D mm	回轉數 No Load RPM min^{-1}	進給速度 Feed Speed mm/min	回轉數 No Load RPM min^{-1}	進給速度 Feed Speed mm/min	回轉數 No Load RPM min^{-1}	進給速度 Feed Speed mm/min	回轉數 No Load RPM min^{-1}	進給速度 Feed Speed mm/min	回轉數 No Load RPM min^{-1}	進給速度 Feed Speed mm/min
1	20000	240	20000	75	20000	195	20000	145	20000	95
2	15000	385	11150	100	15000	335	13000	215	11140	130
3	14000	655	7500	145	10600	505	8500	395	7430	245
4	10800	675	5500	155	8000	515	6500	405	5570	245
5	8200	695	4500	155	6400	540	5000	425	4460	260
6	7000	720	3700	170	5300	555	4200	435	3710	260
8	5200	720	2800	170	4000	555	3200	440	2785	275
10	4200	695	2200	170	3200	535	2500	420	2230	255
12	3500	695	1850	170	2650	535	2100	420	1855	255

DP-4-R

被削材 Work Piece	碳素鋼/合金鋼 Carbon Steel/Alloy Steel ~ 30HRC		不銹鋼 Stainless Steel		預硬鋼/調制鋼 Pre-hardened Steel/Hardened Steel ~ 45HRC		預硬鋼/調制鋼 Pre-hardened Steel/Hardened Steel ~ 50HRC		淬硬鋼 Hardened Steel ~55HRC	
D mm	回轉數 No Load RPM min^{-1}	進給速度 Feed Speed mm/min	回轉數 No Load RPM min^{-1}	進給速度 Feed Speed mm/min	回轉數 No Load RPM min^{-1}	進給速度 Feed Speed mm/min	回轉數 No Load RPM min^{-1}	進給速度 Feed Speed mm/min	回轉數 No Load RPM min^{-1}	進給速度 Feed Speed mm/min
3	14000	985	7500	175	10600	755	8500	590	7430	435
4	10800	1010	5500	175	8000	770	6500	600	5570	445
5	8200	1055	4500	175	6400	805	5000	640	4460	470
6	7000	1080	3700	195	5300	830	4200	650	3710	470
8	5200	1070	2800	195	4000	815	3200	660	2785	485
10	4200	1055	2200	195	3200	805	2500	625	2230	450
12	3500	1055	1850	195	2650	805	2100	625	1855	450
16	2600	985	1400	175	2000	755	1600	590	1390	435

DATA
Technical Data
技術支持

DG-2-E & DG-2-EL

被削材	鑄鐵/球墨鑄鐵 Cast Iron/Ball Cast Iron		碳素鋼/合金鋼 Carbon Steel/Alloy Steel 750N/mm^2		碳素鋼/合金鋼 Carbon Steel/Alloy Steel ~30HRC		預硬鋼/調制鋼 Pre-hardened Steel/Hardened Steel ~40HRC		不銹鋼 Stainless Steel		預硬鋼/調制鋼 Pre-hardened Steel/Hardened Steel ~50HRC	
D mm	回轉數 No Load RPM min^{-1}	進給速度 Feed Speed mm/min	回轉數 No Load RPM min^{-1}	進給速度 Feed Speed mm/min	回轉數 No Load RPM min^{-1}	進給速度 Feed Speed mm/min	回轉數 No Load RPM min^{-1}	進給速度 Feed Speed mm/min	回轉數 No Load RPM min^{-1}	進給速度 Feed Speed mm/min	回轉數 No Load RPM min^{-1}	進給速度 Feed Speed mm/min
1	20000	165	20000	165	20000	135	20000	135	20000	50	20000	100
2	15000	265	15000	265	15000	240	15000	235	11150	70	13000	150
3	14000	455	14000	455	13000	420	10600	350	7500	100	8500	275
4	10800	465	10800	465	10000	430	8000	355	5500	110	6500	280
5	8200	485	8200	485	7600	450	6400	370	4500	110	5000	295
6	7000	500	7000	500	6400	460	5300	385	3700	115	4200	300
8	5200	495	5200	495	4800	455	4000	380	2800	115	3200	305
10	4200	485	4200	485	3800	450	3200	370	2200	115	2500	290
12	3500	485	3500	485	3200	450	2650	370	1850	115	2100	290
14	3000	455	3000	455	2700	420	2300	350	1600	110	1800	275
16	2600	455	2600	455	2400	420	2000	350	1400	100	1600	275
18	2300	445	2300	445	2100	410	1800	345	1250	100	1400	270
20	2050	445	2050	445	1900	410	1600	345	1100	100	1250	270

DG-4-G-E & DG-4-G-EL

被削材	鑄鐵/球墨鑄鐵 Cast Iron/Ball Cast Iron		碳素鋼/合金鋼 Carbon Steel/Alloy Steel 750N/mm^2		碳素鋼/合金鋼 Carbon Steel/Alloy Steel ~30HRC		預硬鋼/調制鋼 Pre-hardened Steel/Hardened Steel ~40HRC		不銹鋼 Stainless Steel		預硬鋼/調制鋼 Pre-hardened Steel/Hardened Steel ~50HRC	
D mm	回轉數 No Load RPM min^{-1}	進給速度 Feed Speed mm/min	回轉數 No Load RPM min^{-1}	進給速度 Feed Speed mm/min	回轉數 No Load RPM min^{-1}	進給速度 Feed Speed mm/min	回轉數 No Load RPM min^{-1}	進給速度 Feed Speed mm/min	回轉數 No Load RPM min^{-1}	進給速度 Feed Speed mm/min	回轉數 No Load RPM min^{-1}	進給速度 Feed Speed mm/min
1	20000	225	20000	225	20000	180	20000	180	20000	80	20000	135
2	15000	360	15000	360	15000	325	15000	315	11150	90	13000	200
3	14000	610	14000	610	13000	570	10600	470	7500	110	8500	370
4	10800	630	10800	630	10000	575	8000	480	5500	115	6500	380
5	8200	660	8200	660	7600	600	6400	505	4500	115	5000	400
6	7000	675	7000	675	6400	620	5300	515	3700	120	4200	405
8	5200	665	5200	665	4800	610	4000	510	2800	120	3200	415
10	4200	660	4200	660	3800	600	3200	505	2200	120	2500	390
12	3500	660	3500	660	3200	600	2650	505	1850	120	2100	390
14	3000	610	3000	610	2700	570	2300	470	1600	115	1800	370
16	2600	610	2600	610	2400	570	2000	470	1400	110	1600	370
18	2300	600	2300	600	2100	560	1800	460	1250	95	1400	365
20	2050	600	2050	600	1900	560	1600	460	1100	95	1250	365

DATA

Technical Data
技術支持

DG-2-EP

被削材 Work Piece		碳素鋼/合金鋼 Carbon Steel/Alloy Steel 750N/mm²			碳素鋼/合金鋼 Carbon Steel/Alloy Steel ~30HRC			預硬鋼/調制鋼 Pre-hardened Steel/Hardened Steel ~40HRC			不銹鋼 Stainless Steel		
D mm	有效長度 Length	回轉數 No Load RPM min⁻¹	進給速度 Feed Speed mm/min	~ap mm	回轉數 No Load RPM min⁻¹	進給速度 Feed Speed mm/min	~ap mm	回轉數 No Load RPM min⁻¹	進給速度 Feed Speed mm/min	ap mm	回轉數 No Load RPM min⁻¹	進給速度 Feed Speed mm/min	ap mm
0.5	4	28000	500	0.023	28000	400	0.021	28000	250	0.018	25000	200	0.014
0.5	6	22000	400	0.007	22000	350	0.06	22000	150	0.005	20000	150	0.004
0.5	8	18000	300	0.005	18000	300	0.005	18000	150	0.004	20000	150	0.003
0.8	4	32000	900	0.057	32000	600	0.053	32000	600	0.044	25000	400	0.035
0.8	6	26000	700	0.036	26000	450	0.034	26000	400	0.028	21000	300	0.022
0.8	8	22000	500	0.026	22000	350	0.024	22000	300	0.02	18000	200	0.016
0.8	10	22000	500	0.01	22000	350	0.01	22000	300	0.008	18000	200	0.006
1.0	4	29000	1300	0.08	27000	1000	0.08	26000	900	0.07	20000	600	0.05
1.0	6	29000	1300	0.07	27000	1000	0.07	26000	900	0.06	20000	600	0.04
1.0	8	24000	900	0.05	23000	800	0.04	22000	700	0.04	18000	400	0.03
1.0	10	20000	700	0.03	19000	600	0.03	18000	500	0.03	15000	300	0.02
1.0	12	20000	700	0.02	19000	600	0.02	18000	500	0.02	15000	300	0.01
1.0	14	18000	500	0.015	15000	400	0.01	15000	360	0.01	12000	200	0.008
1.2	6	25000	1100	0.09	23000	1000	0.08	22000	900	0.07	17000	600	0.05
1.2	8	21000	900	0.07	20000	700	0.07	19000	700	0.05	14000	400	0.04
1.2	10	21000	900	0.06	20000	700	0.05	19000	700	0.04	14000	400	0.03
1.2	12	18000	700	0.04	17000	600	0.04	16000	500	0.03	11000	300	0.02
1.5	6	20000	1200	0.15	18000	1000	0.14	18000	900	0.11	14000	600	0.09
1.5	8	19000	900	0.11	16000	800	0.1	15000	700	0.08	12000	400	0.07
1.5	10	19000	900	0.09	16000	800	0.08	15000	700	0.06	12000	400	0.05
1.5	12	19000	900	0.07	16000	800	0.06	15000	700	0.05	12000	400	0.04
1.5	14	19000	700	0.06	16000	650	0.05	15000	630	0.04	12000	360	0.03
2.0	6	16000	1300	0.34	15000	1100	0.31	14000	1000	0.26	11000	700	0.21
2.0	8	16000	1300	0.29	15000	1100	0.26	14000	1000	0.22	11000	700	0.18
2.0	10	14000	900	0.26	13000	800	0.24	12000	700	0.20	9000	500	0.16
2.0	12	14000	900	0.14	13000	800	0.13	12000	700	0.11	9000	500	0.09
2.0	14	14000	900	0.1	13000	800	0.11	12000	700	0.09	9000	500	0.07
2.0	16	14000	900	0.08	13000	800	0.08	12000	700	0.07	9000	500	0.06
2.5	8	13000	1300	0.42	12000	1100	0.39	11000	1000	0.33	9000	700	0.26
2.5	10	13000	1300	0.36	12000	1100	0.33	11000	1000	0.28	9000	700	0.22
2.5	12	13000	1300	0.24	12000	1100	0.23	11000	1000	0.19	9000	700	0.15
2.5	14	12000	900	0.18	10000	800	0.17	9000	700	0.14	7000	500	0.11
2.5	16	12000	900	0.13	10000	800	0.12	9000	700	0.09	7000	500	0.08
2.5	18	12000	800	0.11	10000	720	0.10	9000	630	0.07	7000	450	0.07
2.5	20	12000	800	0.09	10000	720	0.08	9000	630	0.05	7000	450	0.05

DATA
Technical Data
技術支持

DG-2-EP

被削材 Work Piece		碳素鋼/合金鋼 Carbon Steel/Alloy Steel 750N/mm²			碳素鋼/合金鋼 Carbon Steel/Alloy Steel ~30HRC			預硬鋼/調制鋼 Pre-hardened Steel/Hardened Steel ~40HRC			不銹鋼 Stainless Steel		
D mm	有效長度 Length	回轉數 No Load RPM min⁻¹	進給速度 Feed Speed mm/min	ap mm	回轉數 No Load RPM min⁻¹	進給速度 Feed Speed mm/min	ap mm	回轉數 No Load RPM min⁻¹	進給速度 Feed Speed mm/min	ap mm	回轉數 No Load RPM min⁻¹	進給速度 Feed Speed mm/min	ap mm
3.0	6	11000	1300	0.42	10000	1100	0.39	10000	1000	0.32	8000	700	0.27
3.0	8	11000	1300	0.39	10000	1100	0.36	10000	1000	0.30	8000	700	0.24
3.0	10	11000	1300	0.31	10000	1100	0.29	10000	1000	0.24	8000	700	0.19
3.0	12	11000	1100	0.29	10000	1000	0.27	10000	900	0.22	8000	650	0.16
3.0	14	11000	1100	0.27	10000	1000	0.25	10000	900	0.20	8000	650	0.15
3.0	16	10000	850	0.22	10000	750	0.20	9000	650	0.17	6000	450	0.13
3.0	18	10000	850	0.16	10000	750	0.14	9000	650	0.12	6000	450	0.10
3.0	20	10000	850	0.12	10000	750	0.10	9000	650	0.08	6000	450	0.07
4.0	12	8000	1300	0.42	7000	1100	0.38	7000	1000	0.32	6000	700	0.26
4.0	16	8000	1100	0.39	7000	1000	0.35	7000	900	0.30	6000	650	0.24
4.0	20	7000	900	0.34	7000	800	0.30	6000	700	0.27	5000	500	0.20
4.0	25	7000	900	0.30	7000	800	0.27	6000	700	0.24	5000	500	0.15
5.0	16	6000	1200	0.49	6000	1000	0.45	5000	1000	0.38	5000	600	0.30
5.0	25	5000	800	0.45	5000	720	0.42	5000	700	0.35	5000	600	0.25

DG-4-E & DG-4-EL

被削材 Work Piece	鑄鐵/球墨鑄鐵 Cast Iron/Ball Cast Iron		碳素鋼/合金鋼 Carbon Steel/Alloy Steel 750N/mm²		碳素鋼/合金鋼 Carbon Steel/Alloy Steel ~30HRC		預硬鋼/調制鋼 Pre-hardened Steel/Hardened Steel ~40HRC		不銹鋼 Stainless Steel		預硬鋼/調制鋼 Pre-hardened Steel/Hardened Steel ~50HRC	
D mm	回轉數 No Load RPM min⁻¹	進給速度 Feed Speed mm/min	回轉數 No Load RPM min⁻¹	進給速度 Feed Speed mm/min	回轉數 No Load RPM min⁻¹	進給速度 Feed Speed mm/min	回轉數 No Load RPM min⁻¹	進給速度 Feed Speed mm/min	回轉數 No Load RPM min⁻¹	進給速度 Feed Speed mm/min	回轉數 No Load RPM min⁻¹	進給速度 Feed Speed mm/min
1	20000	250	20000	250	20000	200	20000	200	20000	90	20000	150
2	15000	400	15000	400	15000	360	15000	350	11150	100	13000	225
3	14000	680	14000	680	13000	630	10600	525	7500	120	8500	410
4	10800	700	10800	700	10000	640	8000	535	5500	125	6500	420
5	8200	730	8200	730	7600	670	6400	560	4500	125	5000	440
6	7000	750	7000	750	6400	690	5300	575	3700	135	4200	450
8	5200	740	5200	740	4800	680	4000	565	2800	135	3200	460
10	4200	730	4200	730	3800	670	3200	560	2200	135	2500	435
12	3500	730	3500	730	3200	670	2650	560	1850	135	2100	435
14	3000	680	3000	680	2700	630	2300	525	1600	125	1800	410
16	2600	680	2600	680	2400	630	2000	525	1400	120	1600	410
18	2300	670	2300	670	2100	620	1800	515	1250	105	1400	405
20	2050	670	2050	670	1900	620	1600	515	1100	105	1250	405

DATA

Technical Data
技術支持

DG-2-ES

被削材 Work Piece	鑄鐵/球墨鑄鐵 Cast Iron/Ball Cast Iron		碳素鋼/合金鋼 Carbon Steel/Alloy Steel 750N/mm²		碳素鋼/合金鋼 Carbon Steel/Alloy Steel ~30HRC		預硬鋼/調制鋼 Pre-hardened Steel/Hardened Steel ~40HRC		不銹鋼 Stainless Steel	
D mm	回轉數 No Load RPM min⁻¹	進給速度 Feed Speed mm/min	回轉數 No Load RPM min⁻¹	進給速度 Feed Speed mm/min	回轉數 No Load RPM min⁻¹	進給速度 Feed Speed mm/min	回轉數 No Load RPM min⁻¹	進給速度 Feed Speed mm/min	回轉數 No Load RPM min⁻¹	進給速度 Feed Speed mm/min
0.3	32000	115	32000	115	32000	115	32000	80	32000	40
0.4	32000	125	32000	125	32000	125	32000	90	27500	50
0.5	32000	125	32000	125	29500	125	25000	90	22000	50
0.6	32000	125	32000	125	24500	125	21000	90	18500	50
0.7	32000	125	32000	125	24500	125	21000	90	18500	50
0.8	24500	125	24500	125	18500	125	15500	90	13500	50
0.9	24500	125	24500	125	18500	125	15500	90	13500	50
1.0	21000	140	25000	165	16800	130	14500	90	10000	50
1.5	13000	140	15000	165	11800	130	10000	90	7000	50
2.0	13000	160	15000	185	11800	145	10000	100	7000	60
2.5	8700	200	10000	240	8200	185	6600	100	4700	60
3.0	8700	235	10000	270	8200	220	6600	100	4700	75

DG-2-B & DG-2-BL

被削材 Work Piece	鑄鐵/球墨鑄鐵 Cast Iron/Ball Cast Iron		碳素鋼/合金鋼 Carbon Steel/Alloy Steel 750N/mm²		碳素鋼/合金鋼 Carbon Steel/Alloy Steel ~30HRC		預硬鋼/調制鋼 Pre-hardened Steel/Hardened Steel ~40HRC		不銹鋼 Stainless Steel		預硬鋼/調制鋼 Pre-hardened Steel/Hardened Steel ~50HRC	
D mm	回轉數 No Load RPM min⁻¹	進給速度 Feed Speed mm/min	回轉數 No Load RPM min⁻¹	進給速度 Feed Speed mm/min	回轉數 No Load RPM min⁻¹	進給速度 Feed Speed mm/min	回轉數 No Load RPM min⁻¹	進給速度 Feed Speed mm/min	回轉數 No Load RPM min⁻¹	進給速度 Feed Speed mm/min	回轉數 No Load RPM min⁻¹	進給速度 Feed Speed mm/min
R0.5	40000	800	40000	800	38000	700	32000	320	22300	200	25000	275
R1.0	24000	900	24000	900	19000	760	16000	400	11150	230	13000	275
R1.5	15500	950	15500	950	12750	760	10600	450	7400	290	8500	280
R2.0	11500	950	11500	950	9550	760	8000	550	5550	370	6500	370
R2.5	9500	1050	9500	1050	7650	800	6400	550	4450	370	5000	375
R3.0	8000	1050	8000	1050	6400	800	5300	580	3700	390	4200	390
R4.0	6000	1300	6000	1300	4800	950	4000	700	2750	455	3200	440
R5.0	4800	1200	4800	1200	3800	900	3200	650	2200	430	2500	440
R6.0	4000	1100	4000	1100	3200	840	2650	610	1850	430	2100	420
R8.0	3000	1050	3000	1050	2400	800	2000	600	1350	380	1600	375
R10.0	2400	950	2400	950	1900	680	1600	560	1100	370	1250	330

DATA

Technical Data
技術支持

DG-4-B

被削材 Work Piece	鑄鐵/球墨鑄鐵 Cast Iron/Ball Cast Iron		碳素鋼/合金鋼 Carbon Steel/Alloy Steel 750N/mm²		碳素鋼/合金鋼 Carbon Steel/Alloy Steel ~30HRC		預硬鋼/調制鋼 Pre-hardened Steel/Hardened Steel ~40HRC		不銹鋼 Stainless Steel		預硬鋼/調制鋼 Pre-hardened Steel/Hardened Steel ~40HRC	
切削速度	150m/min		150m/min		150m/min		150m/min		150m/min		150m/min	
D mm	回轉數 No Load RPM min⁻¹	進給速度 Feed Speed mm/min	回轉數 No Load RPM min⁻¹	進給速度 Feed Speed mm/min	回轉數 No Load RPM min⁻¹	進給速度 Feed Speed mm/min	回轉數 No Load RPM min⁻¹	進給速度 Feed Speed mm/min	回轉數 No Load RPM min⁻¹	進給速度 Feed Speed mm/min	回轉數 No Load RPM min⁻¹	進給速度 Feed Speed mm/min
R1.5	15500	1710	15500	1710	12750	1340	10600	810	7400	520	8500	500
R2.0	11500	1710	11500	1710	9550	1340	8000	990	5550	660	6500	665
R2.5	9500	1890	9500	1890	7650	1440	6400	990	4450	660	5000	675
R3.0	8000	1890	8000	1890	6400	1440	5300	1040	3700	700	4200	700
R4.0	6000	2340	6000	2340	4800	1710	4000	1260	2750	820	3200	790
R5.0	4800	2160	4800	2160	3800	1620	3200	1170	2200	770	2500	790
R6.0	4000	1980	4000	1980	3200	1510	2650	1100	1850	770	2100	755
R8.0	3000	1890	3000	1890	2400	1440	2000	1080	1350	680	1600	675
R10.0	2400	1710	2400	1710	1900	1220	1600	1000	1100	660	1250	595

DG-2-BS

被削材 Work Piece	鑄鐵/球墨鑄鐵 Cast Iron/Ball Cast Iron		碳素鋼/合金鋼 Carbon Steel/Alloy Steel 750N/mm²		碳素鋼/合金鋼 Carbon Steel/Alloy Steel ~30HRC		預硬鋼/調制鋼 Pre-hardened Steel/Hardened Steel ~40HRC		不銹鋼 Stainless Steel	
D mm	回轉數 No Load RPM min⁻¹	進給速度 Feed Speed mm/min	回轉數 No Load RPM min⁻¹	進給速度 Feed Speed mm/min	回轉數 No Load RPM min⁻¹	進給速度 Feed Speed mm/min	回轉數 No Load RPM min⁻¹	進給速度 Feed Speed mm/min	回轉數 No Load RPM min⁻¹	進給速度 Feed Speed mm/min
R0.15	32000	300	32000	300	32000	270	32000	250	32000	150
R0.2	32000	380	32000	380	32000	320	32000	300	32000	175
R0.25	32000	460	32000	460	32000	410	32000	330	32000	205
R0.3	32000	535	32000	535	32000	500	32000	420	32000	265
R0.35	32000	550	32000	550	32000	520	32000	440	32000	270
R0.4	32000	610	32000	610	32000	560	32000	460	27500	285
R0.45	32000	700	32000	700	32000	600	25000	400	27500	285
R0.50	32000	765	32000	765	32000	640	25000	400	22000	285
R1.0	24000	900	24000	900	19000	760	16000	400	11150	230
R1.5	15500	950	15500	950	12750	760	10600	450	7400	290

DATA

Technical Data
技術支持

DG-2-BP

被削材 Work Piece		碳素鋼/合金鋼 Carbon Steel/Alloy Steel 750N/mm²				碳素鋼/合金鋼 Carbon Steel/Alloy Steel ~30HRC				預硬鋼/調制鋼 Pre-hardened Steel/Hardened Steel ~40HRC				不銹鋼 Stainless Steel			
D mm	有效長度 Length	回轉數 No Load RPM min⁻¹	進給速度 Feed Speed mm/min	ae mm	ap mm	回轉數 No Load RPM min⁻¹	進給速度 Feed Speed mm/min	ae mm	ap mm	回轉數 No Load RPM min⁻¹	進給速度 Feed Speed mm/min	ae mm	ap mm	回轉數 No Load RPM min⁻¹	進給速度 Feed Speed mm/min	ae mm	ap mm
R0.25	4	27000	400	0.025	0.02	27000	380	0.025	0.02	27000	300	0.025	0.02	27000	200	0.025	0.02
R0.25	6	21000	200	0.015	0.01	21000	180	0.015	0.01	21000	160	0.015	0.01	21000	150	0.015	0.01
R0.3	4	27000	400	0.12	0.03	27000	380	0.12	0.03	25000	250	0.12	0.03	24000	200	0.12	0.03
R0.3	6	25000	300	0.12	0.03	25000	280	0.12	0.03	20000	150	0.12	0.03	20000	140	0.12	0.03
R0.3	8	25000	240	0.12	0.03	25000	225	0.12	0.03	20000	120	0.12	0.03	20000	110	0.12	0.03
R0.4	4	27000	600	0.16	0.04	27000	550	0.16	0.04	23000	450	0.16	0.04	21000	300	0.16	0.04
R0.4	6	24000	400	0.12	0.04	24000	360	0.12	0.04	21000	250	0.12	0.04	19000	200	0.12	0.04
R0.4	8	22000	300	0.12	0.04	22000	270	0.12	0.04	19000	150	0.12	0.04	19000	140	0.12	0.04
R0.4	10	22000	270	0.09	0.03	22000	250	0.09	0.03	19000	135	0.09	0.03	19000	120	0.09	0.03
R0.5	4	28000	600	0.20	0.05	28000	550	0.20	0.05	25000	500	0.20	0.05	21000	300	0.20	0.05
R0.5	6	21000	400	0.20	0.05	21000	360	0.20	0.05	19000	300	0.20	0.05	16000	200	0.20	0.05
R0.5	8	21000	360	0.15	0.05	21000	320	0.15	0.05	19000	270	0.15	0.05	16000	180	0.15	0.05
R0.5	10	18000	300	0.10	0.03	18000	270	0.10	0.03	17000	200	0.10	0.03	14000	150	0.10	0.03
R0.5	12	18000	270	0.10	0.03	18000	250	0.10	0.03	17000	180	0.10	0.03	14000	135	0.10	0.03
R0.6	6	20000	600	0.24	0.06	20000	540	0.24	0.06	17000	300	0.24	0.06	14000	200	0.24	0.06
R0.6	8	20000	540	0.24	0.06	20000	500	0.24	0.06	17000	270	0.24	0.06	14000	170	0.24	0.06
R0.6	12	16000	300	0.18	0.06	16000	270	0.18	0.06	14000	200	0.18	0.06	11000	150	0.18	0.06
R0.6	16	16000	270	0.12	0.03	16000	230	0.12	0.03	14000	175	0.12	0.03	11000	135	0.12	0.03
R0.75	8	17000	600	0.30	0.08	17000	540	0.30	0.08	15000	300	0.30	0.08	12000	250	0.30	0.08
R0.75	12	17000	540	0.24	0.06	17000	500	0.24	0.06	15000	275	0.24	0.06	12000	225	0.24	0.06
R0.75	16	13000	300	0.16	0.04	13000	275	0.16	0.04	12000	200	0.16	0.04	9500	150	0.16	0.04
R1.0	6	16500	800	0.40	0.10	16500	750	0.40	0.10	16500	560	0.40	0.10	13500	450	0.40	0.10
R1.0	8	16500	800	0.32	0.10	16500	750	0.32	0.10	16500	560	0.32	0.10	13500	450	0.32	0.10
R1.0	10	14000	630	0.30	0.08	14000	600	0.30	0.08	13000	450	0.30	0.08	10000	270	0.30	0.08
R1.0	12	14000	630	0.30	0.06	14000	600	0.30	0.06	13000	450	0.30	0.06	10000	270	0.30	0.06
R1.0	16	14000	550	0.24	0.06	14000	530	0.24	0.06	13000	400	0.24	0.06	10000	270	0.24	0.06
R1.0	20	14000	360	0.16	0.06	14000	330	0.16	0.06	10000	225	0.16	0.06	8000	175	0.16	0.06
R1.25	8	14000	800	0.10	0.32	14000	750	0.10	0.32	14000	560	0.10	0.32	12500	450	0.10	0.32
R1.25	12	13000	630	0.06	0.30	13000	600	0.06	0.30	12000	450	0.06	0.30	10000	270	0.06	0.30
R1.25	16	13000	550	0.06	0.24	13000	530	0.06	0.24	12000	400	0.06	0.24	10000	270	0.06	0.24
R1.25	20	10000	360	0.06	0.16	10000	330	0.06	0.16	8000	225	0.06	0.06	7000	175	0.06	0.16
R1.5	10	12000	800	0.15	0.40	12000	720	0.15	0.40	9500	600	0.15	0.40	7500	400	0.15	0.40
R1.5	12	12000	720	0.15	0.40	12000	650	0.15	0.40	9500	540	0.15	0.40	7500	360	0.15	0.40
R1.5	16	10000	600	0.15	0.40	10000	540	0.15	0.40	8500	300	0.15	0.40	6500	250	0.15	0.40
R1.5	20	10000	600	0.10	0.32	10000	540	0.10	0.32	8500	300	0.10	0.32	6500	250	0.10	0.32
R2.0	10	9000	800	0.20	0.80	9000	720	0.20	0.80	7500	600	0.20	0.80	6000	400	0.20	0.80
R2.0	16	9000	800	0.20	0.60	9000	720	0.20	0.60	7500	600	0.20	0.60	6000	400	0.20	0.60

DATA

Technical Data
技術支持

DG-2-BP

被削材 Work Piece		碳素鋼/合金鋼 Carbon Steel/Alloy Steel 750N/mm²				碳素鋼/合金鋼 Carbon Steel/Alloy Steel ~30HRC				預硬鋼/調制鋼 Pre-hardened Steel/Hardened Steel ~40HRC				不銹鋼 Stainless Steel			
D mm	有效長度 Length	回轉數 No Load RPM min⁻¹	進給速度 Feed Speed mm/min	ae mm	ap mm	回轉數 No Load RPM min⁻¹	進給速度 Feed Speed mm/min	ae mm	ap mm	回轉數 No Load RPM min⁻¹	進給速度 Feed Speed mm/min	ae mm	ap mm	回轉數 No Load RPM min⁻¹	進給速度 Feed Speed mm/min	ae mm	ap mm
R2.0	20	7000	600	0.20	0.40	7000	540	0.20	0.40	6000	400	0.20	0.40	5000	250	0.20	0.40
R2.0	25	7000	600	0.15	0.40	7000	540	0.15	0.40	6000	400	0.15	0.40	5000	250	0.15	0.40
R2.5	16	7000	600	0.25	1.00	7000	540	0.25	0.10	6500	500	0.25	1.00	5000	400	0.25	1.00
R2.5	25	6000	500	0.25	1.00	6000	450	0.25	1.00	5000	500	0.25	1.00	4000	250	0.25	1.00

DG-2-R

被削材 Work Piece	鑄鐵/球墨鑄鐵 Cast Iron/Ball Cast Iron		碳素鋼/合金鋼 Carbon Steel/Alloy Steel 750N/mm²		碳素鋼/合金鋼 Carbon Steel/Alloy Steel ~30HRC		預硬鋼/調制鋼 Pre-hardened Steel/Hardened Steel ~40HRC		不銹鋼 Stainless Steel		預硬鋼/調制鋼 Pre-hardened Steel/Hardened Steel ~50HRC	
D mm	回轉數 No Load RPM min⁻¹	進給速度 Feed Speed mm/min	回轉數 No Load RPM min⁻¹	進給速度 Feed Speed mm/min	回轉數 No Load RPM min⁻¹	進給速度 Feed Speed mm/min	回轉數 No Load RPM min⁻¹	進給速度 Feed Speed mm/min	回轉數 No Load RPM min⁻¹	進給速度 Feed Speed mm/min	回轉數 No Load RPM min⁻¹	進給速度 Feed Speed mm/min
1	20000	200	20000	200	20000	160	20000	160	20000	60	20000	120
2	15000	320	15000	320	15000	290	15000	280	11150	84	13000	180
3	14000	545	14000	545	13000	510	10600	420	7500	120	8500	330
4	10800	560	10800	560	10000	520	8000	430	5500	130	6500	335
5	8200	580	8200	580	7600	540	6400	450	4500	130	5000	355
6	7000	600	7000	600	6400	550	5300	460	3700	140	4200	360
8	5200	600	5200	600	4800	550	4000	460	2800	140	3200	365
10	4200	580	4200	580	3800	540	3200	445	2200	140	2500	350
12	3500	580	3500	580	3200	540	2650	445	1850	140	2100	350

DG-4-R & DG-4-RL

被削材 Work Piece	鑄鐵/球墨鑄鐵 Cast Iron/Ball Cast Iron		碳素鋼/合金鋼 Carbon Steel/Alloy Steel 750N/mm²		碳素鋼/合金鋼 Carbon Steel/Alloy Steel ~30HRC		預硬鋼/調制鋼 Pre-hardened Steel/Hardened Steel ~40HRC		不銹鋼 Stainless Steel		預硬鋼/調制鋼 Pre-hardened Steel/Hardened Steel ~50HRC	
D mm	回轉數 No Load RPM min⁻¹	進給速度 Feed Speed mm/min	回轉數 No Load RPM min⁻¹	進給速度 Feed Speed mm/min	回轉數 No Load RPM min⁻¹	進給速度 Feed Speed mm/min	回轉數 No Load RPM min⁻¹	進給速度 Feed Speed mm/min	回轉數 No Load RPM min⁻¹	進給速度 Feed Speed mm/min	回轉數 No Load RPM min⁻¹	進給速度 Feed Speed mm/min
3	14000	820	14000	820	13000	755	10600	630	7500	145	8500	490
4	10800	840	10800	840	10000	770	8000	640	5500	145	6500	500
5	8200	880	8200	880	7600	810	6400	670	4500	145	5000	530
6	7000	900	7000	900	6400	830	5300	690	3700	160	4200	540
8	5200	890	5200	890	4800	815	4000	680	2800	160	3200	550
10	4200	880	4200	880	3800	810	3200	670	2200	160	2500	520
12	3500	880	3500	880	3200	810	2650	670	1850	160	2100	520
16	2600	680	2600	680	2400	630	2000	525	1400	120	1600	490

DATA

Technical Data
技術支持

DH-4-E & DH-4-EL

被削材 Work Piece	預硬鋼/調制鋼 Pre-hardened Steel/Hardened Steel ~40-50HRC		淬硬鋼 Hardened Steel ~50~60HRC		淬硬鋼 Hardened Steel ~60~68HRC	
D mm	回轉數 No Load RPM min^{-1}	進給速度 Feed Speed mm/min	回轉數 No Load RPM min^{-1}	進給速度 Feed Speed mm/min	回轉數 No Load RPM min^{-1}	進給速度 Feed Speed mm/min
1	40000	320	40000	320	32000	260
2	40000	800	24000	480	16000	320
3	32000	1020	16000	510	11000	350
4	24000	1250	12000	620	8000	420
5	19000	1360	9500	680	6400	460
6	16000	1540	8000	770	5300	510
8	12000	1540	6000	770	4000	510
10	9600	1540	4800	770	3200	510
12	8000	1600	4000	800	2700	540
14	6800	1340	3400	680	2300	460
16	6000	1200	3000	600	2000	400
18	5300	1060	2700	530	1800	360
20	4800	960	2400	480	1600	320

DH-2-B & DH-2-BL

被削材 Work Piece	預硬鋼/調制鋼 Pre-hardened Steel/Hardened Steel ~40-50HRC				淬硬鋼 Hardened Steel ~50~60HRC				淬硬鋼 Hardened Steel ~60~68HRC			
D mm	回轉數 No Load RPM min^{-1}	進給速度 Feed Speed mm/min	ae mm	ap mm	回轉數 No Load RPM min^{-1}	進給速度 Feed Speed mm/min	ae mm	ap mm	回轉數 No Load RPM min^{-1}	進給速度 Feed Speed mm/min	ae mm	ap mm
R0.5	40000	1900	0.05	0.01	36000	1500	0.05	0.01	32000	1400	0.05	0.01
R1.0	33000	3100	0.075	0.02	26000	2100	0.075	0.02	24000	2000	0.075	0.02
R1.5	29000	4100	0.1	0.03	23000	2900	0.1	0.03	21000	2600	0.1	0.03
R2.0	22000	3900	0.15	0.04	17000	2500	0.15	0.04	15500	2100	0.15	0.04
R2.5	17500	3500	0.15	0.05	13500	2200	0.15	0.05	13000	2000	0.15	0.05
R3.0	15000	3100	0.2	0.06	11500	1700	0.2	0.06	10500	1500	0.2	0.06
R4.0	11000	2500	0.25	0.08	8600	1600	0.25	0.08	8000	1400	0.25	0.08
R5.0	9000	2000	0.3	0.1	7000	1400	0.3	0.1	6000	1200	0.3	0.1
R6.0	7500	1800	0.35	0.1	5700	1300	0.35	0.1	5300	1200	0.35	0.1
R8.0	5500	1800	0.4	0.1	4300	1300	0.4	0.1	4000	1200	0.4	0.1
R10.0	4500	1800	0.5	0.1	3500	1300	0.5	0.1	3200	1200	0.5	0.1

DATA
Technical Data
技術支持

DH-4-R & DH-4-RF & DH-4-RP

被削材 Work Piece 切削速度	預硬鋼/調制鋼 Pre-hardened Steel/Hardened Steel ~40-50HRC 300m/min		淬硬鋼 Hardened Steel ~50~60HRC 150m/min		淬硬鋼 Hardened Steel ~60~68HRC 100m/min	
D mm	回轉數 No Load RPM min^{-1}	進給速度 Feed Speed mm/min	回轉數 No Load RPM min^{-1}	進給速度 Feed Speed mm/min	回轉數 No Load RPM min^{-1}	進給速度 Feed Speed mm/min
3	32000	1225	16000	610	11000	420
4	24000	1500	12000	745	8000	500
5	19000	1630	9500	815	6400	550
6	16000	1850	8000	925	5300	610
8	12000	1850	6000	925	4000	610
10	9600	1850	4800	925	3200	610
12	8000	1920	4000	960	2700	648
16	6000	1440	3000	720	2000	480

DL-2-E & DL-2-EL

被削材 Work Piece	鋁合金 Aluminium Alloy		硅鋁合金Si≤10% Titanium Alloy	
D mm	回轉數 No Load RPM min^{-1}	進給速度 Feed Speed mm/min	回轉數 No Load RPM min^{-1}	進給速度 Feed Speed mm/min
1	40000	650	40000	500
2				
3	26500	1500	21000	1100
4				
5	16000	1500	13000	1100
6				
8	10000	1400	8000	1100
10				
12	6600	1650	5300	1300
14				
16	5000	1700	4000	1350
18				
20	4000	1700	3200	1350

DATA

Technical Data
技術支持

DL-3-E & DL-3-EL

被削材 Work Piece	鋁合金 Aluminium Alloy		硅鋁合金Si≤10% Titanium Alloy	
D mm	回轉數 No Load RPM min^{-1}	進給速度 Feed Speed mm/min	回轉數 No Load RPM min^{-1}	進給速度 Feed Speed mm/min
1	40000	800	40000	600
2	40000	1200	32000	900
3	26500	1800	21000	1300
4	20000	2000	16000	1500
5	16000	1750	13000	1300
6	13000	1500	10600	1200
8	10000	1650	8000	1300
10	8000	1900	6500	1500
12	6600	1950	5300	1550
14	5700	2000	4600	1600
16	5000	2000	4000	1600
18	4400	2000	3500	1600
20	4000	2000	3200	1600

DL-2-B

被削材 Work Piece	鋁合金 Aluminium Alloy		硅鋁合金Si≤10% Titanium Alloy	
D mm	回轉數 No Load RPM min^{-1}	進給速度 Feed Speed mm/min	回轉數 No Load RPM min^{-1}	進給速度 Feed Speed mm/min
R1.0	40000	2000	32000	1600
R1.5	26500	1950	21000	1550
R2.0	20000	1950	16000	1550
R2.5	16000	1950	13000	1550
R3.0	13000	2000	10600	1600
R4.0	10000	2450	8000	2000
R5.0	8000	2200	6500	1750
R6.0	6600	2050	5300	1650

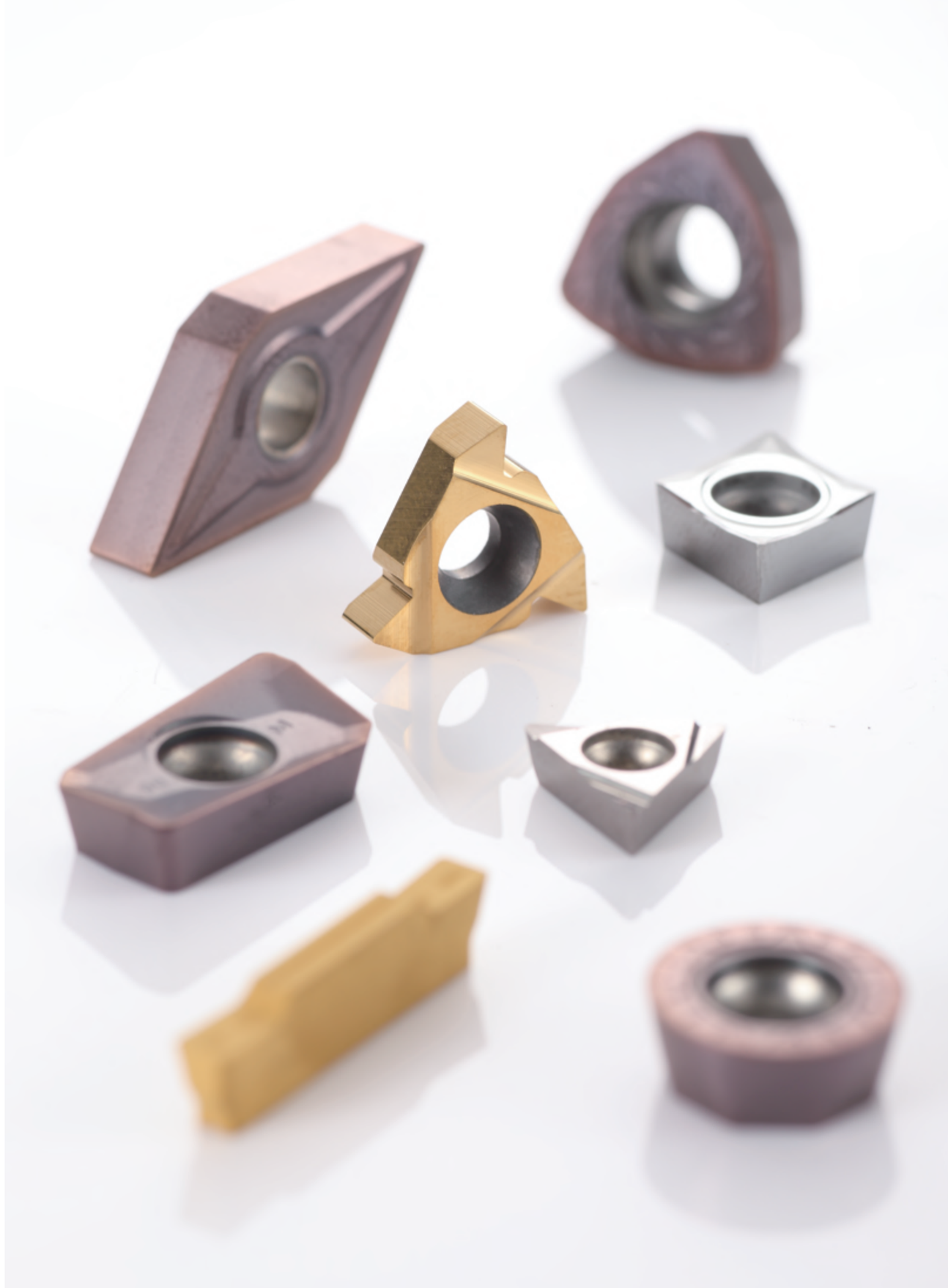

MILLING

銑削刀片牌號一覽表
Insert Grades - Milling

工件材質 Work Piece	ISO	塗層 Coated		硬質合金 Carbide	金屬陶瓷 Cermet	塗層金屬陶瓷 Coated Cermet
		CVD	PVD			
P 鋼		DC1125 DC2130	DP1115 DP5120 DP5210 DP5230	NC30	UMC25	MC25 MC30
M 不銹鋼		DC2130 DC2140	DP5120 DP5220 DP5230			
K 鑄鐵			DP5210 DP5230	NA20		
N 有色金屬				NA15 NA20		
S 耐熱合金、鈦合金			DP5120			

注：
Notice:

● 連續加工
● Stable cutting

◐ 輕斷續加工
◐ General cutting

❖ 斷續加工
❖ Unstable Cutting

TURNING

車削刀片牌號一覽表
Insert Grades - Turning

工件材質 Work Piece	ISO	普通車削 Turning					螺紋 Threading		切斷切槽 Parting-off/Grooving		
		塗層 Coated		硬質合金 Carbide	金屬陶瓷 Cermet	塗層金屬陶瓷 Coated Cermet	塗層 PVD PVD Coated	硬質合金 Carbide	塗層 Coated		硬質合金 Carbide
		CVD	PVD						CVD	PVD	
P 鋼		DC1115 DC1120 DC1215 DC1220 DC1130 DC1235	DP5015 DP5110 DP5120	NC10 NC30	UMC10		DP1120		DC1120	DP5220 DP5125	
M 不銹鋼		DC2115 DC2215 DC2120 DC2220	DP5015 DP5120 DP5220				DP2120		DP5220	DP5220 DP5125 DP2130	
K 鑄鐵		DC3205 DC3210 DC3215 DC3115 DC3220		ND10 NA10 NA20					DP3115 DP5220	DP5125	NA20
N 有色金屬				NA10 NA15		NA20					NA20
S 耐熱合金、鈦合金			DP5110 DP5215 DP5120	NA15					DP5125		NA20

注：
Notice:

▲ 主推牌號
▲ Excellent (Instock)

● 可選牌號
● Good (Instock)

○ 按訂單生產
○ On Request

CCMT

Insert Grades - Drilling
鑽孔刀片牌號一覽表

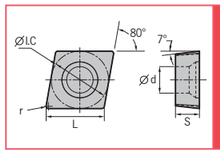

工件材料 Work Piece

P鋼	● ● ◐ ◐ ⚒ ⚒ ◐ ● ● ◐ ◐ ⚒ ⚒ ◐ ◐ ◐ ◐ ⚒ ⚒ ⚒ ⚒ ⚒ ⚒ ⚒ ● ●
M不銹鋼	◐ ● ◐ ◐ ◐ ◐ ⚒ ⚒ ⚒
K鑄鐵	● ◐ ◐ ◐ ⚒ ⚒ ● ● ⚒ ●
N有色金屬	● ◐ ⚒ ● ◐ ⚒
S耐熱合金	● ● ● ● ●

刀片外形 Shape	型號 Specification	尺寸 Size					塗層硬質合金 Coated Carbide																							硬質合金 Carbide			金屬陶瓷 Cermet	
		L	ΦI.C	S	Φd	r	DC1115	DC1215	DC1120	DC1220	DC1130	DC1235	DP1230	DP5015	DP5110	DP5215	DP5120	DP5220	DP5125	DC2115	DC2215	DC2120	DC2220	DC2130	DC3205	DC3210	DC3115	DC3215	DC3220	NA10	NA15	NA20	UMC10	MC10
	CCMT060202-HF	6.4	6.35	2.38	2.8	0.2		▲	●	▲							●														○		
	CCMT060204-HF	6.4	6.35	2.38	2.8	0.4		▲	●	○	○						●											●						
	CCMT060208-HF	6.4	6.35	2.38	2.8	0.8		▲	●		○						●				○													
	CCMT09T302-HF	9.7	9.525	3.97	4.4	0.2			●	○							●															○		
	CCMT09T304-HF	9.7	9.525	3.97	4.4	0.4		▲	●	▲	○						●									●		●				○		
	CCMT09T308-HF	9.7	9.525	3.97	4.4	0.8		▲	●	○	○						●				○				○	○		○			○	○		
	CCMT120404-HF	12.9	12.7	4.76	5.56	0.4	●	○	●	○																		●						
	CCMT120408-HF	12.9	12.7	4.76	5.56	0.8		○																										
	CCMT060202-EF	6.4	6.35	2.38	2.8	0.2									○		●	▲			▲													
	CCMT060204-EF	6.4	6.35	2.38	2.8	0.4									○		●	▲			▲													
	CCMT09T302-EF	9.7	9.525	3.97	4.4	0.2									○		●	▲			▲													
	CCMT09T304-EF	9.7	9.525	3.97	4.4	0.4									○		●	▲			▲													
	CCMT09T308-EF	9.7	9.525	3.97	4.4	0.8									○		●	▲			○													
	CCMT120404-EF	12.9	12.7	4.76	5.56	0.4									○		●	▲			▲													
	CCMT120408-EF	12.9	12.7	4.76	5.56	0.8									○		●	▲			○													
	CCMT060204-HM	6.4	6.35	2.38	2.8	0.4		▲	●	▲	○						●					●				●		●				●		
	CCMT060208-HM	6.4	6.35	2.38	2.8	0.8		▲	●	○	○						●					○				○		●						
	CCMT09T304-HM	9.7	9.525	3.97	4.4	0.4	●	▲	●	▲	●						●					●				●		●						
	CCMT09T308-HM	9.7	9.525	3.97	4.4	0.8		▲	●	▲	●						●					●				●		●						
	CCMT120404-HM	12.9	12.7	4.76	5.56	0.4		▲	●	○	○											○				○		○						
	CCMT120408-HM	12.9	12.7	4.76	5.56	0.8		▲	●	▲	●						○					●				●		●						
	CCMT120412-HM	12.9	12.7	4.76	5.56	1.2		○	○																									
	CCMT060204-EM	6.4	6.35	2.38	2.8	0.4											●	▲				▲												
	CCMT060208-EM	6.4	6.35	2.38	2.8	0.8											●	▲				▲												
	CCMT09T304-EM	9.7	9.525	3.97	4.4	0.4											●	▲				▲												
	CCMT09T308-EM	9.7	9.525	3.97	4.4	0.8											●	▲				▲												
	CCMT120404-EM	12.9	12.7	4.76	5.56	0.4											●	▲				▲												
	CCMT120408-EM	12.9	12.7	4.76	5.56	0.8											●	▲				▲												
	CCMT120412-EM	12.9	12.7	4.76	5.56	1.2											●	▲				▲												

CCMT

Insert Grades - Drilling
鑽孔刀片牌號一覽表

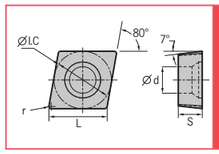

工件材料 Work Piece

P鋼	● ● ◐ ◐ ⚒ ⚒ ◐ ● ● ◐ ◐ ⚒ ⚒ ◐ ◐ ◐ ◐ ⚒ ⚒ ⚒ ⚒ ⚒ ⚒ ⚒ ● ●
M不銹鋼	◐ ● ◐ ◐ ◐ ◐ ⚒ ⚒ ⚒
K鑄鐵	● ◐ ◐ ◐ ⚒ ⚒ ● ● ⚒ ●
N有色金屬	● ◐ ⚒ ● ◐ ⚒
S耐熱合金	● ● ● ● ●

刀片外形 Shape	型號 Specification	尺寸 Size					塗層硬質合金 Coated Carbide																							硬質合金 Carbide			金屬陶瓷 Cermet	
		L	ΦI.C	S	Φd	r	DC1115	DC1215	DC1120	DC1220	DC1130	DC1235	DP1230	DP5015	DP5110	DP5215	DP5120	DP5220	DP5125	DC2115	DC2215	DC2120	DC2220	DC2130	DC3205	DC3210	DC3115	DC3215	DC3220	NA10	NA15	NA20	UMC10	MC10
	CCMT060204-HR	6.4	6.35	2.38	2.8	0.4		○	●	○	○						○																	
	CCMT060208-HR	6.4	6.35	2.38	2.8	0.8		○	●		●											●						●			●			
	CCMT09T304-HR	9.7	9.525	3.97	4.4	0.4			●		○						○															●		
	CCMT09T308-HR	9.7	9.525	3.97	4.4	0.8		▲	●	▲	●											●			●	●		●						
	CCMT120408-HR	12.9	12.7	4.76	5.56	0.8		▲	●		●						○					●			●	●	●	●						
	CCMT120412-HR	12.9	12.7	4.76	5.56	1.2		○	●		●											○				●		○						
	CCGX060202-LC	6.4	6.35	2.38	2.8	0.2																									▲			
	CCGX060204-LC	6.4	6.35	2.38	2.8	0.4																									▲			
	CCGX09T302-LC	9.7	9.525	3.97	4.4	0.2																									▲			
	CCGX09T304-LC	9.7	9.525	3.97	4.4	0.4																									▲			
	CCGX09T308-LC	9.7	9.525	3.97	4.4	0.8																									▲			
	CCGX120404-LC	12.9	12.7	4.76	5.56	0.4																									▲			
	CCGX120408-LC	12.9	12.7	4.76	5.56	0.8																									▲			
	CCGX060202-LH	6.4	6.35	2.38	2.8	0.2																									▲			
	CCGX060204-LH	6.4	6.35	2.38	2.8	0.4																									▲	●		
	CCGX060208-LH	6.4	6.35	2.38	2.8	0.8																									▲			
	CCGX09T302-LH	9.7	9.525	3.97	4.4	0.2																									▲			
	CCGX09T304-LH	9.7	9.525	3.97	4.4	0.4																									▲	●		
	CCGX09T308-LH	9.7	9.525	3.97	4.4	0.8																									▲			
	CCGX120402-LH	12.9	12.7	4.76	5.56	0.2																									○			
	CCGX120404-LH	12.9	12.7	4.76	5.56	0.4																									▲			
	CCGX120408-LH	12.9	12.7	4.76	5.56	0.8																									▲			
	CCGX120412-LH	12.9	12.7	4.76	5.56	1.2																									○			

螺紋車刀片 Threading Insert
切槽車刀片 Grooving Insert
普通車刀片 Turning Inserts
銑刀片 Milling Inserts
鏜刀片 Boring Inserts
刀片 CARBIDE INSERTS

WCMX

Insert Grades - Drilling
鏜孔刀片牌號一覽表

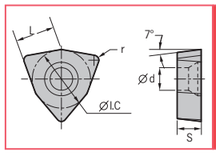

工件材料 Work Piece

P鋼	●	●	◐	◐	✣	✣	◐	●		◐	◐	✣							✣										●				
M不銹鋼							◐	●		◐	◐		◐	●	●	◐	◐	✣																
K鑄鐵																			●	◐	◐	✣	✣	●		✣		●						
N有色金屬																								●	◐	✣								
S耐熱合金									●	●		◐	◐											●										

刀片外形 Shape	型號 Specification	尺寸 Size					塗層硬質合金 Coated Carbide																						硬質合金 Carbide			金屬陶瓷 Cermet	
		L	ΦI.C	S	Φd	r	DC1115	DC1215	DC1120	DC1220	DC1130	DC1235	DP1230	DP5015	DP5110	DP5215	DP5120	DP5220	DP5125	DC2115	DC2215	DC2120	DC2220	DC2130	DC3205	DC3210	DC3115	DC3215	DC3220	NA10	NA15	NA20	UMC10	MC10
	**WCMX030208**	3.8	5.56	2.38	2.8	0.8							▲																					
	WCMX040208	4.3	6.35	2.38	3.1	0.8							▲																					
	WCMX050308	5.4	7.94	3.18	3.2	0.8							▲																					
	WCMX06T308	6.5	9.525	3.97	3.7	0.8							▲																					
	WCMX080412	8.7	12.7	4.76	4.3	1.2							▲																					
	**WCMX030208-TM**	3.8	5.56	2.38	2.8	0.8											▲							○				●		●				
	WCMX040208-TM	4.3	6.35	2.38	3.1	0.8											▲							○				●		●	○			
	WCMX050308-TM	5.4	7.94	3.18	3.2	0.8											▲							○				●		●				
	WCMX06T308-TM	6.5	9.525	3.97	3.7	0.8											▲							○				●		●	○			
	WCMX080412-TM	8.7	12.7	4.76	4.3	1.2											▲											●		●				
	**WCMX030208-PG**	3.8	5.56	2.38	2.8	0.8											▲																	
	WCMX040208-PG	4.3	6.35	2.38	3.1	0.8											▲																	
	WCMX050308-PG	5.4	7.94	3.18	3.2	0.8											▲																	
	WCMX06T308-PG	6.5	9.525	3.97	3.7	0.8											▲																	
	WCMX080412-PG	8.7	12.7	4.76	4.3	1.2											▲																	

SPGT/TCMT

Insert Grades - Drilling
鏜孔刀片牌號一覽表

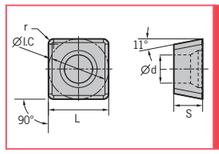

工件材料 Work Piece

P鋼	●	●	◐	◐	✣	✣	◐	●		◐	◐	✣							✣										●				
M不銹鋼							◐	●		◐	◐		◐	●	◐	◐	✣																
K鑄鐵																			●	◐	◐	✣	✣	●		✣		●						
N有色金屬																								●	◐	✣								
S耐熱合金									●	●															●									

刀片外形 Shape	型號 Specification	尺寸 Size					塗層硬質合金 Coated Carbide																						硬質合金 Carbide			金屬陶瓷 Cermet	
		L	ΦI.C	S	Φd	r	DC1115	DC1215	DC1120	DC1220	DC1130	DC1235	DP1230	DP5015	DP5110	DP5215	DP5120	DP5220	DP5125	DC2115	DC2215	DC2120	DC2220	DC2130	DC3205	DC3210	DC3115	DC3215	DC3220	NA10	NA15	NA20	UMC10	MC10
	**SPGT050204-PM**	5	5	2.38	2.2	0.4												▲																
	SPGT060204-PM	6	6	2.38	2.6	0.4												▲																
	SPGT07T308-PM	7.94	7.94	3.97	2.8	0.8												▲																
	SPGT090408-PM	9.8	9.8	4.3	4.2	0.8												▲																
	SPGT110408-PM	11.5	11.5	4.76	4.4	0.8												▲																
	SPGT140512-PM	14.3	14.3	5.2	5.75	1.2												▲																

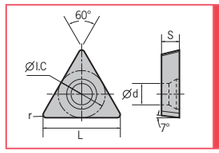

工件材料 Work Piece

P鋼	●	●	◐	◐	✣	✣	◐	●		◐	◐	✣							✣										●				
M不銹鋼							◐	●		◐	◐		◐	●	◐	◐	✣																
K鑄鐵																			●	◐	◐	✣	✣	●		✣		●						
N有色金屬																								●	◐	✣								
S耐熱合金									●	●															●									

刀片外形 Shape	型號 Specification	尺寸 Size					塗層硬質合金 Coated Carbide																						硬質合金 Carbide			金屬陶瓷 Cermet	
		L	ΦI.C	S	Φd	r	DC1115	DC1215	DC1120	DC1220	DC1130	DC1235	DP1230	DP5015	DP5110	DP5215	DP5120	DP5220	DP5125	DC2115	DC2215	DC2120	DC2220	DC2130	DC3205	DC3210	DC3115	DC3215	DC3220	NA10	NA15	NA20	UMC10	MC10
	**TCMT110202-HQ**	11	6.35	2.38	2.8	0.2																											▲	
	TCMT110204-HQ	11	6.35	2.38	2.8	0.4																						●					▲	
	TCMT110208-HQ	11	6.35	2.38	2.8	0.8																						●					▲	

TBGT/TPGH

Insert Grades - Drilling
鑽孔刀片牌號一覽表

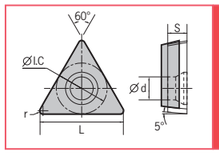

工件材料 Work Piece

	DC1115	DC1215	DC1120	DC1220	DC1130	DC1235	DP1230	DP5015	DP5110	DP5215	DP5120	DP5220	DP5125	DC2115	DC2215	DC2120	DC2220	DC2130	DC3205	DC3210	DC3115	DC3215	DC3220	NA10	NA15	NA20	UMC10	MC10
P鋼	●	●	◕	◕	✲	✲	✲	◕	●		◕	◕	✲					✲									●	
M不銹鋼								◕	●		◕	◕		◕	●	●	◕	✲										
K鑄鐵																			●	◕	◕	✲	✲	●		✲		●
N有色金屬																								●	◕	✲		
S耐熱合金									●	●																	●	

刀片外形 Shape	型號 Specification	尺寸 Size L	ΦI.C	S	Φd	r	塗層硬質合金 Coated Carbide	硬質合金 Carbide	金屬陶瓷 Cermet
	TBGT060101R/L	6.4	3.97	1.59	2.3	0.1	○	●	▲
	TBGT060102R/L	6.4	3.97	1.59	2.3	0.2	○	●	▲
	TBGT060104R/L	6.4	3.97	1.59	2.3	0.4	○	●	▲

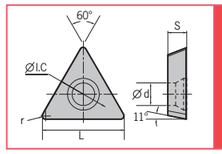

工件材料 Work Piece

	DC1115	DC1215	DC1120	DC1220	DC1130	DC1235	DP1230	DP5015	DP5110	DP5215	DP5120	DP5220	DP5125	DC2115	DC2215	DC2120	DC2220	DC2130	DC3205	DC3210	DC3115	DC3215	DC3220	NA10	NA15	NA20	UMC10	MC10
P鋼	●	●	◕	◕	✲	✲	✲	◕	●		◕	◕	✲					✲									●	
M不銹鋼								◕	●		◕	◕		◕	●	●	◕	✲										
K鑄鐵																			●	◕	◕	✲	✲	●		✲		●
N有色金屬																								●	◕	✲		
S耐熱合金									●	●																	●	

刀片外形 Shape	型號 Specification	尺寸 Size L	ΦI.C	S	Φd	r	塗層硬質合金 Coated Carbide	硬質合金 Carbide	金屬陶瓷 Cermet
	TPGH080202R/L	8	4.76	2.38	2.3	0.2	○	●	▲ ●
	TPGH080204R/L	8	4.76	2.38	2.3	0.4	○	●	▲ ●
	TPGH090202R/L	9.6	5.56	2.38	3	0.2	○	●	▲ ●
	TPGH090204R/L	9.6	5.56	2.38	3	0.4	○	●	▲ ●
	TPGH110302R/L	11	6.35	3.18	3.3	0.2	○	●	▲ ●
	TPGH110304R/L	11	6.35	3.18	3.3	0.4	○	●	▲ ●
	TPGH110308R/L	11	6.35	3.18	3.3	0.8	○	●	▲
	TPGH160302R/L	16	9.525	3.18	4.5	0.2	○	●	▲
	TPGH160304R/L	16	9.525	3.18	4.5	0.4	○	●	▲ ●
	TPGH160308R/L	16	9.525	3.18	4.5	0.8	L	L	▲ ●

RPEW/RDMT/RC*T/APMT

Insert Grades - Milling
銑刀片牌號一覽表

工件材料 Work Piece

	DC1125	DC2130	DC2140	DP1115	DP5120	DP5210	DP5220	DP5230	UMC25	MC25	MC30	NC30	NA15	NA20
P鋼	✲	✲	✲	◕	◕	●	◕	✲	◕	◕	●	✲		
M不銹鋼		✲	✲				◕	✲						
K鑄鐵	✲				◕		✲							
N有色金屬													●	◕
S耐熱合金							✲							

刀片外形 Shape	型號 Specification
	RPEW0802M0
	RPEW1003M0
	RPKW1204M0
	RPKT10T3M0S
	RPKT1204M0S

工件材料 Work Piece

	DC1125	DC2130	DC2140	DP1115	DP5120	DP5210	DP5220	DP5230	UMC25	MC25	MC30	NC30	NA15	NA20
P鋼	✲	✲	✲	◕	◕	●	◕	✲	◕	◕	●	✲		
M不銹鋼		✲	✲				◕	✲						
K鑄鐵	✲				◕		✲							
N有色金屬													●	◕
S耐熱合金							✲							

刀片外形 Shape	型號 Specification
	RDMT0802M0TN
	RDMT10T3M0TN
	RDMT1204M0TN
	RDMX1604M0TN

工件材料 Work Piece

	DC1125	DC2130	DC2140	DP1115	DP5120	DP5210	DP5220	DP5230	UMC25	MC25	MC30	NC30	NA15	NA20
P鋼	✲	✲	✲	◕	◕	●	◕	✲	◕	◕	●	✲		
M不銹鋼		✲	✲				◕	✲						
K鑄鐵	✲				◕		✲							
N有色金屬													●	◕
S耐熱合金							✲							

刀片外形 Shape	型號 Specification
	RCET10T3M0
	RCET1204M0
	RCKT10T3M0E
	RCKT1204M0E
	RCKT10T3M0
	RCKT1204M0
	RCKT1204M0R

工件材料 Work Piece

	DC1125	DC2130	DC2140	DP1115	DP5120	DP5210	DP5220	DP5230	UMC25	MC25	MC30	NC30	NA15	NA20
P鋼	✲	✲	✲	◕	◕	●	◕	✲	◕	◕	●	✲		
M不銹鋼		✲	✲				◕	✲						
K鑄鐵	✲				◕		✲							
N有色金屬													●	◕
S耐熱合金							✲							

刀片外形 Shape	型號 Specification
	APKT160408
	APMT1135PDER
	APMT1604PDER

APMT/WPKW/SEHT/SEEN

Insert Grades - Milling
銑刀片牌號一覽表

工件材料 Work Piece	P鋼	M不銹鋼	K鑄鐵	N有色金屬	S耐熱合金

工件材料 Work Piece	P鋼	M不銹鋼	K鑄鐵	N有色金屬	S耐熱合金

刀片外形 Shape	型號 Specification	塗層硬質合金 Coated Carbide DC1125	DC2130	DC2140	DP1115	DP5120	DP5210	DP5220	DP5230	金屬陶瓷 Cermet UMC25	MC25	MC30	硬質合金 Carbide NC30	NA15	NA20
	WPKW06X415							●							
	WPKW080615							▲							

刀片外形 Shape	型號 Specification	塗層硬質合金 Coated Carbide DC1125	DC2130	DC2140	DP1115	DP5120	DP5210	DP5220	DP5230	金屬陶瓷 Cermet UMC25	MC25	MC30	硬質合金 Carbide NC30	NA15	NA20
	SEHT1204AFSN	▲						▲							
	SEGX1204														▲

工件材料 Work Piece	P鋼	M不銹鋼	K鑄鐵	N有色金屬	S耐熱合金

工件材料 Work Piece	P鋼	M不銹鋼	K鑄鐵	N有色金屬	S耐熱合金

刀片外形 Shape	型號 Specification	塗層硬質合金 Coated Carbide DC1125	DC2130	DC2140	DP1115	DP5120	DP5210	DP5220	DP5230	金屬陶瓷 Cermet UMC25	MC25	MC30	硬質合金 Carbide NC30	NA15	NA20
	EPNW0603TN						▲								
	EPNT0603TN						▲								

刀片外形 Shape	型號 Specification	塗層硬質合金 Coated Carbide DC1125	DC2130	DC2140	DP1115	DP5120	DP5210	DP5220	DP5230	金屬陶瓷 Cermet UMC25	MC25	MC30	硬質合金 Carbide NC30	NA15	NA20
	SEEN1203AFTN									▲					
	SPEN1203AFTN									▲					
	SEKR1203AFTN					●		●							

SPMW/SPMT/LPMT/TPKN

Insert Grades - Milling
銑刀片牌號一覽表

工件材料 Work Piece	P鋼	M不銹鋼	K鑄鐵	N有色金屬	S耐熱合金

工件材料 Work Piece	P鋼	M不銹鋼	K鑄鐵	N有色金屬	S耐熱合金

刀片外形 Shape	型號 Specification	塗層硬質合金 Coated Carbide DC1125	DC2130	DC2140	DP1115	DP5120	DP5210	DP5220	DP5230	金屬陶瓷 Cermet UMC25	MC25	MC30	硬質合金 Carbide NC30	NA15	NA20
	SPMW090304				▲										
	SPMW090308												●		

刀片外形 Shape	型號 Specification	塗層硬質合金 Coated Carbide DC1125	DC2130	DC2140	DP1115	DP5120	DP5210	DP5220	DP5230	金屬陶瓷 Cermet UMC25	MC25	MC30	硬質合金 Carbide NC30	NA15	NA20
	LPMT150412								●						

工件材料 Work Piece	P鋼	M不銹鋼	K鑄鐵	N有色金屬	S耐熱合金

工件材料 Work Piece	P鋼	M不銹鋼	K鑄鐵	N有色金屬	S耐熱合金

刀片外形 Shape	型號 Specification	塗層硬質合金 Coated Carbide DC1125	DC2130	DC2140	DP1115	DP5120	DP5210	DP5220	DP5230	金屬陶瓷 Cermet UMC25	MC25	MC30	硬質合金 Carbide NC30	NA15	NA20
	SPMT120408								●						

刀片外形 Shape	型號 Specification	塗層硬質合金 Coated Carbide DC1125	DC2130	DC2140	DP1115	DP5120	DP5210	DP5220	DP5230	金屬陶瓷 Cermet UMC25	MC25	MC30	硬質合金 Carbide NC30	NA15	NA20
	TPKN2204PDSKR					●		●							

R390/C*MT/WDMW

Insert Grades - Milling
銑刀片牌號一覽表

工件材料 Work Piece	P鋼	M不銹鋼	K鑄鐵	N有色金屬	S耐熱合金
	✣	✣	✣	●	◕
	✣	✣	✣	●	◕
	◕	◕	◕	◕	◕
	◕	◕	◕	◕	◕
	●	◕	◕	◕	◕
	◕	◕	◕	◕	◕
	✣	✣	✣	◕	◕
	◕	◕	◕	◕	◕
	◕	◕	◕	◕	◕
	◕	◕	◕	◕	◕
	●	◕	◕	◕	◕
	✣	✣	✣	◕	◕
	●	●	●	●	●
	◕	◕	◕	◕	◕

刀片外形 Shape	型號 Specification	塗層硬質合金 Coated Carbide								金屬陶瓷 Cermet			硬質合金 Carbide		
		DC1125	DC2130	DC2140	DP1115	DP5120	DP5210	DP5220	DP5230	UMC25	MC25	MC30	NC30	NA15	NA20
	R390-11T308							●			●				

刀片外形 Shape	型號 Specification	塗層硬質合金 Coated Carbide								金屬陶瓷 Cermet			硬質合金 Carbide		
		DC1125	DC2130	DC2140	DP1115	DP5120	DP5210	DP5220	DP5230	UMC25	MC25	MC30	NC30	NA15	NA20
	CCMT060204					●									
	CPMT080204					●									
	CPMT090308					●									
	CPMT120408					●									
	CPMT090204Z					●									
	CPMT120308Z					●									
	CPMT160408Z					●									

工件材料 Work Piece	P鋼	M不銹鋼	K鑄鐵	N有色金屬	S耐熱合金
	✣	✣	✣	●	◕
	✣	✣	✣	●	◕
	◕	◕	◕	◕	◕
	◕	◕	◕	◕	◕
	●	◕	◕	◕	◕
	◕	◕	◕	◕	◕
	✣	✣	✣	◕	◕
	◕	◕	◕	◕	◕
	◕	◕	◕	◕	◕
	◕	◕	◕	◕	◕
	●	◕	◕	◕	◕
	✣	✣	✣	◕	◕
	●	●	●	●	●
	◕	◕	◕	◕	◕

刀片外形 Shape	型號 Specification	塗層硬質合金 Coated Carbide								金屬陶瓷 Cermet			硬質合金 Carbide		
		DC1125	DC2130	DC2140	DP1115	DP5120	DP5210	DP5220	DP5230	UMC25	MC25	MC30	NC30	NA15	NA20
	WDMW050316ZTR					●									
	WDMW06T320ZTR					●									
	WDMW080520ZTR					●									
	WDMW10X620ZTR					●									

CNMG

Insert Grades - Turning
車削刀片牌號一覽表

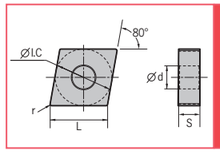

工件材料 Work Piece	P鋼	M不銹鋼	K鑄鐵	N有色金屬	S耐熱合金
	●	●	◕	◕	✣
	●	●	◕	◕	✣
	◕	◕	◕	◕	✣
	◕	◕	◕	◕	✣
	✣	✣	✣	◕	◕
	✣	✣	✣	◕	◕
	◕	◕	◕	◕	◕
	●	●	◕	◕	◕
	◕	◕	◕	◕	◕
	◕	◕	◕	◕	◕
	✣	✣	✣	◕	◕
	●	●	●	●	●
	◕	◕	◕	◕	◕
	●	●	●	●	●

刀片外形 Shape	型號 Specification	尺寸 Size					塗層硬質合金 Coated Carbide																				硬質合金 Carbide						金屬陶瓷 Cermet
		L	ΦI.C	S	Φd	r	DC1115	DC1215	DC1120	DC1220	DC1130	DC1235	DP5015	DP5110	DP5215	DP5120	DP5220	DP5125	DC2115	DC2215	DC2120	DC2220	DC3205	DC3210	DC3115	DC3215	DC3220	NC10	NC30	ND10	NA10	NA15	NA20	UMC10
	CNMG090304-DF	9.7	9.525	3.18	3.81	0.4		○			○					○																	
	CNMG090308-DF	9.7	9.525	3.18	3.81	0.8		○	○		○																						
	CNMG120404-DF	12.9	12.7	4.76	5.16	0.4		▲	●	▲	▲					○					○												
	CNMG120408-DF	12.9	12.7	4.76	5.16	0.8		▲	●	▲	▲	○				○					○												
	CNMG120412-DF	12.9	12.7	4.76	5.16	1.2		▲	○		○										○												
	CNMG090304-EF	9.7	9.525	3.18	3.81	0.4										●	▲			▲													
	CNMG090308-EF	9.7	9.525	3.18	3.81	0.8										○	▲			▲													
	CNMG120404-EF	12.9	12.7	4.76	5.16	0.4										●	▲			▲													
	CNMG120408-EF	12.9	12.7	4.76	5.16	0.8								●		●	▲			▲													
	CNMG120412-EF	12.9	12.7	4.76	5.16	1.2										○	▲			▲													
	CNMG090304-PM	9.7	9.525	3.18	3.81	0.4		▲	●	○																							
	CNMG090308-PM	9.7	9.525	3.18	3.81	0.8		○	●	○																▲							
	CNMG120404-PM	12.9	12.7	4.76	5.16	0.4		▲	●	▲	○													▲		▲	○						
	CNMG120408-PM	12.9	12.7	4.76	5.16	0.8	●	▲	●	▲	●													▲		▲	▲						
	CNMG120412-PM	12.9	12.7	4.76	5.16	1.2		○	●	○	●													▲		▲	▲						
	CNMG120416-PM	12.9	12.7	4.76	5.16	1.6		▲	●	○	●													▲		▲	○						
	CNMG160608-PM	16.1	15.875	6.35	6.35	0.8	●	○	●	○	○													○		○							
	CNMG160612-PM	16.1	15.875	6.35	6.35	1.2	●	○	●	○	●													▲		○							
	CNMG160616-PM	16.1	15.875	6.35	6.35	1.6			●	○														○		○							
	CNMG190608-PM	19.3	19.05	6.35	7.94	0.8		▲	●	○	○															▲							
	CNMG190612-PM	19.3	19.05	6.35	7.94	1.2		▲	●	▲	●													○		▲							
	CNMG190616-PM	19.3	19.05	6.35	7.94	1.6	●	▲	●	○	●													○									
	CNMG090304-DM	9.7	9.525	3.18	3.81	0.4		○	●	○											●												
	CNMG090308-DM	9.7	9.525	3.18	3.81	0.8			○	○											●												
	CNMG120404-DM	12.9	12.7	4.76	5.16	0.4		▲	●	▲	○					●	○				●												
	CNMG120408-DM	12.9	12.7	4.76	5.16	0.8	●	▲	●	▲	●					●	●	○			●												
	CNMG120412-DM	12.9	12.7	4.76	5.16	1.2		▲	●	▲	●					○					●												
	CNMG120416-DM	12.9	12.7	4.76	5.16	1.6			●	○	●										○												
	CNMG160608-DM	16.1	15.875	6.35	6.35	0.8		▲	●	▲	○										●												
	CNMG160612-DM	16.1	15.875	6.35	6.35	1.2		○	●	▲	○										○												
	CNMG160616-DM	16.1	15.875	6.35	6.35	1.6		▲	●	○	●										○												
	CNMG190608-DM	19.3	19.05	6.35	7.94	0.8		○	●	○											○												
	CNMG190612-DM	19.3	19.05	6.35	7.94	1.2		▲	●	▲	○										○												
	CNMG190616-DM	19.3	19.05	6.35	7.94	1.6			●	▲	○										○												

CNMG

Insert Grades - Turning
車削刀片牌號一覽表

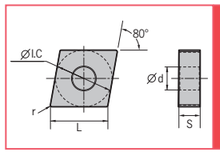

工件材料 Work Piece	
P鋼	● ● ◐ ◐ ✣ ✣ ◐ ● ◐ ◐ ◐ ✣
M不銹鋼	◐ ● ◐
K鑄鐵	◐ ◐
N有色金屬	◐ ◐
S耐熱合金	◐ ◐

刀片外形 Shape	型號 Specification	尺寸 Size					塗層硬質合金 Coated Carbide																								硬質合金 Carbide						金屬陶瓷 Cermet
		L	ΦI.C	S	Φd	r	DC1115	DC1215	DC1120	DC1220	DC1130	DC1235	DP5015	DP5110	DP5215	DP5120	DP5220	DP5125	DC2115	DC2215	DC2120	DC2220	DC3205	DC3210	DC3115	DC3215	DC3220	NC10	NC30	ND10	NA10	NA15	NA20	UMC10
	CNMG120404-EM	12.9	12.7	4.76	5.16	0.4										●	▲					▲												
	CNMG120408-EM	12.9	12.7	4.76	5.16	0.8										●	▲					▲												
	CNMG120412-EM	12.9	12.7	4.76	5.16	1.2										●	▲					▲												
	CNMG160608-EM	16.1	15.875	6.35	6.35	0.8								○		○	▲					▲												
	CNMG160612-EM	16.1	15.875	6.35	6.35	1.2										○	▲					▲												
	CNMG160616-EM	16.1	15.875	6.35	6.35	1.6										○	▲					▲												
	CNMG120408-DR	12.9	12.7	4.76	5.16	0.8		▲	●	▲	●											●			●									
	CNMG120412-DR	12.9	12.7	4.76	5.16	1.2		○	●	▲	○											●			●									
	CNMG120416-DR	12.9	12.7	4.76	5.16	1.6		○		○												●			●									
	CNMG160608-DR	16.1	15.875	6.35	6.35	0.8			○	○												○												
	CNMG160612-DR	16.1	15.875	6.35	6.35	1.2			●	▲	○											●			○									
	CNMG160616-DR	16.1	15.875	6.35	6.35	1.6			○	▲	●																							
	CNMG190608-DR	19.3	19.05	6.35	7.94	0.8			○	○												●			○									
	CNMG190612-DR	19.3	19.05	6.35	7.94	1.2		○	●	▲	●											○			○									
	CNMG190616-DR	19.3	19.05	6.35	7.94	1.6		○	●	▲	●														○									
	CNMG190624-DR	19.3	19.05	6.35	7.94	2.4		○	●	○	●																							
	CNMG120408-ER	12.9	12.7	4.76	5.16	0.8													●			▲												
	CNMG120412-ER	12.9	12.7	4.76	5.16	1.2													●			▲												
	CNMG160612-ER	16.1	15.875	6.35	6.35	1.2													●			▲												
	CNMG160616-ER	16.1	15.875	6.35	6.35	1.6																▲												
	CNMG190612-ER	19.3	19.05	6.35	7.94	1.2																▲												
	CNMG190616-ER	19.3	19.05	6.35	7.94	1.6																▲												
	CNMG120404-TM	12.9	12.7	4.76	5.16	0.4	●		●												●		○	●									○
	CNMG120408-TM	12.9	12.7	4.76	5.16	0.8	●	▲	●	▲	○										●		▲	●	▲	▲	●							○
	CNMG120412-TM	12.9	12.7	4.76	5.16	1.2	●	▲	●	▲												○	○	○										
	CNMG160608-TM	16.1	15.875	6.35	6.35	0.8	●		●												○			○		○								○
	CNMG160612-TM	16.1	15.875	6.35	6.35	1.2			●		○													○										
	CNMG160616-TM	16.1	15.875	6.35	6.35	1.6			○																									
	CNMG190608-TM	19.3	19.05	6.35	7.94	0.8	○		○		○																							
	CNMG190612-TM	19.3	19.05	6.35	7.94	1.2	○		●		○														○									
	CNMG190616-TM	19.3	19.05	6.35	7.94	1.6	○		○		○														○									

DNMG

Insert Grades - Turning
車削刀片牌號一覽表

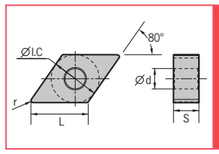

工件材料 Work Piece	
P鋼	● ● ◐ ◐ ✣ ✣ ◐ ● ◐ ◐ ◐ ✣
M不銹鋼	◐ ● ◐
K鑄鐵	◐ ◐
N有色金屬	◐ ◐
S耐熱合金	◐ ◐

刀片外形 Shape	型號 Specification	尺寸 Size					塗層硬質合金 Coated Carbide																								硬質合金 Carbide						金屬陶瓷 Cermet
		L	ΦI.C	S	Φd	r	DC1115	DC1215	DC1120	DC1220	DC1130	DC1235	DP5015	DP5110	DP5215	DP5120	DP5220	DP5125	DC2115	DC2215	DC2120	DC2220	DC3205	DC3210	DC3115	DC3215	DC3220	NC10	NC30	ND10	NA10	NA15	NA20	UMC10
	DNMG110404-DF	11.6	9.525	4.76	3.81	0.4		○	●	○																								
	DNMG110408-DF	11.6	9.525	4.76	3.81	0.8		○	○	○																								
	DNMG110412-DF	11.6	9.525	4.76	3.81	1.2		○	○																									
	DNMG150404-DF	15.5	12.7	4.76	5.16	0.4		▲	●	▲																								
	DNMG150408-DF	15.5	12.7	4.76	5.16	0.8		▲	●	▲																								
	DNMG150412-DF	15.5	12.7	4.76	5.16	1.2		○		○																								
	DNMG150604-DF	15.5	12.7	6.35	5.16	0.4	●	▲	●	▲											○														
	DNMG150608-DF	15.5	12.7	6.35	5.16	0.8		▲	●	○																								
	DNMG150612-DF	15.5	12.7	6.35	5.16	1.2			○																									
	DNMG110404-EF	11.6	9.525	4.76	3.81	0.4										●	▲			▲														
	DNMG110408-EF	11.6	9.525	4.76	3.81	0.8										○	▲			▲														
	DNMG110412-EF	11.6	9.525	4.76	3.81	1.2										○	▲			▲														
	DNMG150404-EF	15.5	12.7	4.76	5.16	0.4										●	▲			▲														
	DNMG150408-EF	15.5	12.7	4.76	5.16	0.8										●	▲			▲														
	DNMG150412-EF	15.5	12.7	4.76	5.16	1.2										○	▲			▲														
	DNMG150604-EF	15.5	12.7	6.35	5.16	0.4										●	▲			▲														
	DNMG150608-EF	15.5	12.7	6.35	5.16	0.8										●	▲			▲														
	DNMG150612-EF	15.5	12.7	6.35	5.16	1.2										○	▲			▲														
	DNMG110404-PM	11.6	9.525	4.76	3.81	0.4		●	●	○																								
	DNMG110408-PM	11.6	9.525	4.76	3.81	0.8		●	●	○	○																							
	DNMG110412-PM	11.6	9.525	4.76	3.81	1.2			○	○																								
	DNMG150404-PM	15.5	12.7	4.76	5.16	0.4		●	●	○																								
	DNMG150408-PM	15.5	12.7	4.76	5.16	0.8	●	●	●	○	○																							
	DNMG150412-PM	15.5	12.7	4.76	5.16	1.2			●	○		○																						
	DNMG150416-PM	15.5	12.7	4.76	5.16	1.6			○	○																								
	DNMG150604-PM	15.5	12.7	6.35	5.16	0.4		●	●	○	○																							
	DNMG150608-PM	15.5	12.7	6.35	5.16	0.8	●	○	●	▲	●																							
	DNMG150612-PM	15.5	12.7	6.35	5.16	1.2		▲	●	▲	○																							
	DNMG150616-PM	15.5	12.7	6.35	5.16	1.6			○	○																								
	DNMG110404-DM	11.6	9.525	4.76	3.81	0.4		●	●	○											○														
	DNMG110408-DM	11.6	9.525	4.76	3.81	0.8		▲	●	▲											●														
	DNMG110412-DM	11.6	9.525	4.76	3.81	1.2		○		○																								
	DNMG150404-DM	15.5	12.7	4.76	5.16	0.4		○		▲																								
	DNMG150408-DM	15.5	12.7	4.76	5.16	0.8		▲	●	▲																								

DNMG

Insert Grades - Turning
車削刀片牌號一覽表

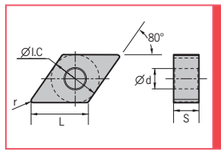

工件材料 Work Piece	DC1115	DC1215	DC1120	DC1220	DC1130	DC1235	DP5015	DP5110	DP5215	DP5120	DP5220	DP5125	DC2115	DC2215	DC2120	DC2220	DC3205	DC3210	DC3115	DC3215	DC3220	NC10	NC30	ND10	NA10	NA15	NA20	UMC10
P鋼	●	●	◕	◕	⁘	⁘	◕	●		◕	◕	⁘										●	⁘					●
M不銹鋼							◕	●		◕	◕		◕	●	●	◕												
K鑄鐵																	●	◕	◕	⁘	⁘			●	●		⁘	
N有色金屬																									●	◕	⁘	
S耐熱合金								●	●																		●	

刀片外形 Shape	型號 Specification	L	ΦI.C	S	Φd	r
	DNMG150412-DM	15.5	12.7	4.76	3.81	0.4
	DNMG150416-DM	15.5	12.7	4.76	3.81	0.8
	DNMG150604-DM	15.5	12.7	4.76	3.81	1.2
	DNMG150608-DM	15.5	12.7	4.76	5.16	0.4
	DNMG150612-DM	15.5	12.7	4.76	5.16	0.8
	DNMG150616-DM	15.5	12.7	4.76	5.16	1.2
	DNMG110404-EM	11.6	9.525	6.35	5.16	0.4
	DNMG110408-EM	11.6	9.525	6.35	5.16	0.8
	DNMG110412-EM	11.6	9.525	6.35	5.16	1.2
	DNMG150404-EM	15.5	12.7	4.76	5.16	1.2
	DNMG150408-EM	15.5	12.7	6.35	5.16	1.2
	DNMG150412-EM	15.5	12.7	4.76	5.16	0.8
	DNMG150604-EM	15.5	12.7	4.76	5.16	1.6
	DNMG150608-EM	15.5	12.7	4.76	5.16	1.6
	DNMG150612-EM	15.5	12.7	6.35	5.16	0.8
	DNMG150408-DR	15.5	12.7	6.35	5.16	0.8
	DNMG150412-DR	15.5	12.7	6.35	5.16	1.2
	DNMG150416-DR	15.5	12.7	6.35	5.16	0.4
	DNMG150608-DR	15.5	12.7	6.35	5.16	0.8
	DNMG150612-DR	15.5	12.7	6.35	5.16	1.2
	DNMG150616-DR	15.5	12.7	6.35	5.16	1.6

刀片外形 Shape	型號 Specification	DC1115	DC1215	DC1120	DC1220	DC1130	DC1235	DP5015	DP5110	DP5215	DP5120	DP5220	DP5125	DC2115	DC2215	DC2120	DC2220	DC3205	DC3210	DC3115	DC3215	DC3220	NC10	NC30	ND10	NA10	NA15	NA20	UMC10
	DNMG150412-DM		▲	●	▲																								
	DNMG150416-DM			○	○																								
	DNMG150604-DM		▲	●	▲	○										●													
	DNMG150608-DM		▲	●	▲	●										●													
	DNMG150612-DM		●	●	▲	○																							
	DNMG150616-DM		○	○	○																								
	DNMG110404-EM									○	▲						▲												
	DNMG110408-EM									○	▲						▲												
	DNMG110412-EM									○	▲						▲												
	DNMG150404-EM									●	▲						▲												
	DNMG150408-EM									●	▲						▲												
	DNMG150412-EM									○	▲						▲												
	DNMG150604-EM								○	●	▲						▲												
	DNMG150608-EM									●	▲						▲												
	DNMG150612-EM									○	▲						▲												
	DNMG150408-DR				○																								
	DNMG150412-DR				○																								
	DNMG150416-DR				○	○																							
	DNMG150608-DR		▲	○	○	○													●		●								
	DNMG150612-DR		○	●	▲	○													○		●								
	DNMG150616-DR					○															○								

SNMG

Insert Grades - Turning
車削刀片牌號一覽表

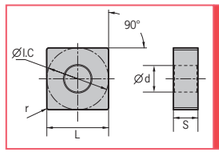

工件材料 Work Piece	DC1115	DC1215	DC1120	DC1220	DC1130	DC1235	DP5015	DP5110	DP5215	DP5120	DP5220	DP5125	DC2115	DC2215	DC2120	DC2220	DC3205	DC3210	DC3115	DC3215	DC3220	NC10	NC30	ND10	NA10	NA15	NA20	UMC10
P鋼	●	●	◕	◕	⁘	⁘	◕	●		◕	◕	⁘										●	⁘					●
M不銹鋼							◕	●		◕	◕		◕	●	●	◕												
K鑄鐵																	●	◕	◕	⁘	⁘			●	●		⁘	
N有色金屬																									●	◕	⁘	
S耐熱合金								●	●																		●	

刀片外形 Shape	型號 Specification	L	ΦI.C	S	Φd	r
	SNMG090304-DF	9.525	9.525	3.18	3.81	0.4
	SNMG090308-DF	9.525	9.525	3.18	3.81	0.8
	SNMG120404-DF	12.7	12.7	4.76	5.16	0.4
	SNMG120408-DF	12.7	12.7	4.76	5.16	0.8
	SNMG120412-DF	12.7	12.7	4.76	5.16	1.2
	SNMG090304-EF	9.525	9.525	3.18	3.81	0.4
	SNMG090308-EF	9.525	9.525	3.18	3.81	0.8
	SNMG090312-EF	9.525	9.525	3.18	3.81	1.2
	SNMG120404-EF	12.7	12.7	4.76	5.16	0.4
	SNMG120408-EF	12.7	12.7	4.76	5.16	0.8
	SNMG120412-EF	12.7	12.7	4.76	5.16	1.2
	SNMG150608-EF	15.875	15.875	6.35	6.35	0.8
	SNMG150612-EF	15.875	15.875	6.35	6.35	1.2
	SNMG090304-PM	9.525	9.525	3.18	3.81	0.4
	SNMG090308-PM	9.525	9.525	3.18	3.81	0.8
	SNMG090312-PM	9.525	9.525	3.18	3.81	1.2
	SNMG120404-PM	12.7	12.7	4.76	5.16	0.4
	SNMG120408-PM	12.7	12.7	4.76	5.16	0.8
	SNMG120412-PM	12.7	12.7	4.76	5.16	1.2
	SNMG120416-PM	12.7	12.7	4.76	5.16	1.6
	SNMG150608-PM	15.875	15.875	6.35	6.35	0.8
	SNMG150612-PM	15.875	15.875	6.35	6.35	1.2
	SNMG190616-PM	19.05	19.05	6.35	7.94	1.6
	SNMG090304-DM	9.525	9.525	3.18	3.81	0.4
	SNMG090308-DM	9.525	9.525	3.18	3.81	0.8
	SNMG120404-DM	12.7	12.7	4.76	5.16	0.4
	SNMG120408-DM	12.7	12.7	4.76	5.16	0.8
	SNMG120412-DM	12.7	12.7	4.76	5.16	1.2
	SNMG120416-DM	12.7	12.7	4.76	5.16	1.6
	SNMG150608-DM	15.875	15.875	6.35	6.35	0.8
	SNMG150612-DM	15.875	15.875	6.35	6.35	1.2
	SNMG150616-DM	15.875	15.875	6.35	6.35	1.6
	SNMG190612-DM	19.05	19.05	6.35	7.94	1.2
	SNMG190616-DM	19.05	19.05	6.35	7.94	1.6

刀片外形 Shape	型號 Specification	DC1115	DC1215	DC1120	DC1220	DC1130	DC1235	DP5015	DP5110	DP5215	DP5120	DP5220	DP5125	DC2115	DC2215	DC2120	DC2220	DC3205	DC3210	DC3115	DC3215	DC3220	NC10	NC30	ND10	NA10	NA15	NA20	UMC10
	SNMG090304-DF		○																										
	SNMG090308-DF		○																										
	SNMG120404-DF		○																										
	SNMG120408-DF		○	●	○																								
	SNMG120412-DF		○		○																								
	SNMG090304-EF										○	▲			▲														
	SNMG090308-EF										○	▲			▲														
	SNMG090312-EF										○	▲			▲														
	SNMG120404-EF										●	▲			▲														
	SNMG120408-EF										●	▲			▲														
	SNMG120412-EF										○	▲			▲														
	SNMG150608-EF										○	▲			▲														
	SNMG150612-EF										○	▲			▲														
	SNMG090304-PM		○	●	○																								
	SNMG090308-PM		○	●	○	○													○										
	SNMG090312-PM		○		○																								
	SNMG120404-PM		○	●	○	○													○										
	SNMG120408-PM		●	●	○	●													▲		▲	▲							
	SNMG120412-PM		●	●	○	○													▲		▲	▲							
	SNMG120416-PM			●	○	○															○								
	SNMG150608-PM				○																								
	SNMG150612-PM		●	●	○														○		●								
	SNMG190616-PM			●	○																								
	SNMG090304-DM		○		○																								
	SNMG090308-DM		○	●	○	○																							
	SNMG120404-DM		▲	●	○																								
	SNMG120408-DM				○																○								
	SNMG120412-DM		▲	●	▲																								
	SNMG120416-DM			●	○	○																							
	SNMG150608-DM		○	●	○																●								
	SNMG150612-DM		●	●	▲	●																							
	SNMG150616-DM				○																								
	SNMG190612-DM		○	●	○	○															○								
	SNMG190616-DM				○																								

SNMG

Insert Grades - Turning
車削刀片牌號一覽表

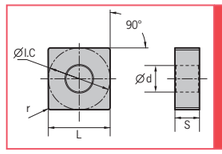

工件材料 Work Piece

| | | |

TNMG

Insert Grades - Turning
車削刀片牌號一覽表

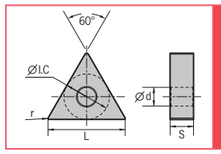

工件材料 Work Piece

P鋼	● ● ◕ ◕ ⁘ ⁘ ◕ ●	◕ ● ◕ ◕ ⁘	◕ ◕ ⁘	● ⁘	⁘	●
M不銹鋼	◕ ●	◕ ◕	◕ ● ● ●	◕ ● ◕ ◕																
K鑄鐵	● ◕ ◕ ⁘ ⁘	● ●	⁘	● ●	⁘
N有色金屬	● ◕ ⁘	●	⁘
S耐熱合金	● ●	●	●

刀片外形 Shape	型號 Specification	尺寸 Size					塗層硬質合金 Coated Carbide																					硬質合金 Carbide						金屬陶瓷 Cermet
		L	ΦI.C	S	Φd	r	DC1115	DC1215	DC1120	DC1220	DC1130	DC1235	DP5015	DP5110	DP5215	DP5120	DP5220	DP5125	DC2115	DC2215	DC2120	DC2220	DC3205	DC3210	DC3115	DC3215	DC3220	NC10	NC30	ND10	NA10	NA15	NA20	UMC10
	**TNMG160404-EM**	16.5	9.525	4.76	3.81	0.4										●	▲				▲												
	TNMG160408-EM	16.5	9.525	4.76	3.81	0.8										●	▲				▲												
	TNMG160412-EM	16.5	9.525	4.76	3.81	1.2										○	▲				▲												
	TNMG220408-EM	22	12.7	4.76	5.16	0.8										●	▲				▲												
	TNMG220412-EM	22	12.7	4.76	5.16	1.2										○	▲				▲												
	TNMG220416-EM	22	12.7	4.76	5.16	1.6										○	▲				▲												
	**TNMG160408-DR**	16.5	9.525	4.76	3.81	0.8		○		○	○												○		○								
	TNMG160412-DR	16.5	9.525	4.76	3.81	1.2		○	○	○	○												●		●								
	TNMG220408-DR	22	12.7	4.76	5.16	0.8				○	●												○										
	TNMG220412-DR	22	12.7	4.76	5.16	1.2			○	○	○															○							
	TNMG220416-DR	22	12.7	4.76	5.16	1.6					○												○										
	TNMG270608-DR	27.5	15.875	6.35	6.35	0.8					○																						
	TNMG270612-DR	27.5	15.875	6.35	6.35	1.2					○																						
	TNMG270616-DR	27.5	15.875	6.35	6.35	1.6					○																						
	**TNMG160408-ER**	16.5	9.525	4.76	3.81	0.8															▲												
	TNMG160412-ER	16.5	9.525	4.76	3.81	1.2															▲												
	TNMG220408-ER	22	12.7	4.76	5.16	0.8															▲												
	TNMG220412-ER	22	12.7	4.76	5.16	1.2															▲												
	**TNMG110308-TM**	11	6.35	3.18	2.26	0.8																		○										
	TNMG160404-TM	16.5	9.525	4.76	3.81	0.4	○		●															●										
	TNMG160408-TM	16.5	9.525	4.76	3.81	0.8	●	○	●															●										
	TNMG160412-TM	16.5	9.525	4.76	3.81	1.2	●		●	○											○			○										
	TNMG220404-TM	22	12.7	4.76	5.16	0.4	○		●		○													●										
	TNMG220408-TM	22	12.7	4.76	5.16	0.8	○		●		○										○			○			○							
	TNMG220412-TM	22	12.7	4.76	5.16	1.2	●		●		○													●			○							
	TNMG220416-TM	22	12.7	4.76	5.16	1.6																		●										
	TNMG270612-TM	27.5	15.875	6.35	6.35	1.2			●		●													○			○							
	TNMG270616-TM	27.5	15.875	6.35	6.35	1.6			○		○																							
	TNMG330916-TM	33	19.05	9.525	7.94	1.6					●																							
	TNMG330924-TM	33	19.05	9.525	7.94	2.4	○		○		●																							

VNMG

Insert Grades - Turning
車削刀片牌號一覽表

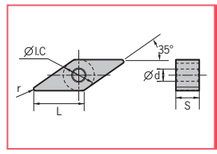

工件材料 Work Piece

P鋼	● ● ◕ ◕ ⁘ ⁘ ◕ ●	◕ ◕ ⁘	◕ ◕ ⁘	● ⁘	⁘	●
M不銹鋼	◕ ●	◕ ◕	◕ ● ◕ ◕	◕ ● ◕ ◕																
K鑄鐵	● ◕ ◕ ⁘ ⁘	● ●	⁘
N有色金屬	● ◕ ⁘	●	⁘
S耐熱合金	● ●	●	●

刀片外形 Shape	型號 Specification	尺寸 Size					塗層硬質合金 Coated Carbide																					硬質合金 Carbide						金屬陶瓷 Cermet
		L	ΦI.C	S	Φd	r	DC1115	DC1215	DC1120	DC1220	DC1130	DC1235	DP5015	DP5110	DP5215	DP5120	DP5220	DP5125	DC2115	DC2215	DC2120	DC2220	DC3205	DC3210	DC3115	DC3215	DC3220	NC10	NC30	ND10	NA10	NA15	NA20	UMC10
	**VNMG160404-DF**	16.6	9.525	4.76	3.81	0.4	▲	●	▲											●														
	VNMG160408-DF	16.6	9.525	4.76	3.81	0.8	▲	○	○																									
	VNMG160404-PM	16.6	9.525	4.76	3.81	0.4	▲	●	○	○																	○	○						
	**VNMG160408-PM**	16.6	9.525	4.76	3.81	0.8	▲	●	○																▲		▲	○						
	VNMG160412-PM	16.6	9.525	4.76	3.81	1.2		○	○																○		○							
	VNMG160404-EM	16.6	9.525	4.76	3.81	0.4											●	▲				▲												
	VNMG160408-EM	16.6	9.525	4.76	3.81	0.8											●	▲				▲												
	**VNMG160404-TM**	16.6	9.525	4.76	3.81	0.4	○		○																	●								
	VNMG160408-TM	16.6	9.525	4.76	3.81	0.8	●		●																	●								

WNMG

Insert Grades - Turning
車削刀片牌號一覽表

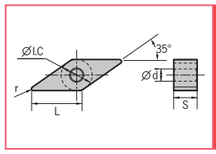

工件材料 Work Piece																																
P鋼	●	●	◕	◕	✣	✣	◕	●		◕	◕	✣											●	✣					●			
M不銹鋼							◕	●		◕	◕		◕	●	◕	◕																	
K鑄鐵																	●	◕	◕	✣	✣			●	●		✣						
N有色金屬																									●	◕	✣						
S耐熱合金									●	●																●							

刀片外形 Shape	型號 Specification	尺寸 Size					塗層硬質合金 Coated Carbide																										硬質合金 Carbide						金屬陶瓷 Cermet
		L	ΦI.C	S	Φd	r	DC1115	DC1215	DC1120	DC1220	DC1130	DC1235	DP5015	DP5110	DP5215	DP5120	DP5220	DP5125	DC2115	DC2215	DC2120	DC2220	DC3205	DC3210	DC3115	DC3215	DC3220	NC10	NC30	ND10	NA10	NA15	NA20	UMC10
	WNMG06T304-DF	6.5	9.525	3.97	3.81	0.4		▲																										
	WNMG06T308-DF	6.5	9.525	3.97	3.81	0.8		▲		▲																								
	WNMG06T312-DF	6.5	9.525	3.97	3.81	1.2		▲		▲																								
	WNMG060404-DF	6.5	9.525	4.76	3.81	0.4		▲	●	▲											○													
	WNMG060408-DF	6.5	9.525	4.76	3.81	0.8		▲	●	▲											●													
	WNMG060412-DF	6.5	9.525	4.76	3.81	1.2		▲	●	○											○													
	WNMG080404-DF	8.7	12.7	4.76	5.16	0.4		▲	●	○											○													
	WNMG080408-DF	8.7	12.7	4.76	5.16	0.8		▲	●	▲											●													
	WNMG080412-DF	8.7	12.7	4.76	5.16	1.2		○	○	○																								
	WNMG06T304-EF	6.5	9.525	3.97	3.81	0.4										○	▲			▲														
	WNMG06T308-EF	6.5	9.525	3.97	3.81	0.8										○	▲			▲														
	WNMG06T312-EF	6.5	9.525	3.97	3.81	1.2										○	▲			▲														
	WNMG060404-EF	6.5	9.525	4.76	3.81	0.4										●	▲			▲														
	WNMG060408-EF	6.5	9.525	4.76	3.81	0.8										●	▲			▲														
	WNMG080404-EF	8.7	12.7	4.76	5.16	0.4								○		●	▲			▲														
	WNMG080408-EF	8.7	12.7	4.76	5.16	0.8								○		●	▲			▲														
	WNMG060408-PM	6.5	9.525	4.76	3.81	0.8		▲	●	○	○													▲		▲								
	WNMG060412-PM	6.5	9.525	4.76	3.81	1.2		○		○														▲		▲								
	WNMG080404-PM	8.7	12.7	4.76	5.16	0.4		○	●	○	○																							
	WNMG080408-PM	8.7	12.7	4.76	5.16	0.8		▲	●	▲	●													▲		▲	▲							
	WNMG080412-PM	8.7	12.7	4.76	5.16	1.2		▲	●	▲	●													▲		▲	▲							
	WNMG080416-PM	8.7	12.7	4.76	5.16	1.6				○														○		○								

WNMG

Insert Grades - Turning
車削刀片牌號一覽表

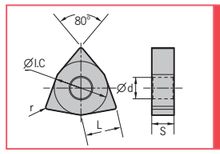

工件材料 Work Piece																																
P鋼	●	●	◕	◕	✣	✣	◕	●		◕	◕	✣											●	✣					●			
M不銹鋼							◕	●		◕	◕		◕	●	◕	◕																	
K鑄鐵																	●	◕	◕	✣	✣			●	●		✣						
N有色金屬																									●	◕	✣						
S耐熱合金									●	●																●							

刀片外形 Shape	型號 Specification	尺寸 Size					塗層硬質合金 Coated Carbide																										硬質合金 Carbide						金屬陶瓷 Cermet
		L	ΦI.C	S	Φd	r	DC1115	DC1215	DC1120	DC1220	DC1130	DC1235	DP5015	DP5110	DP5215	DP5120	DP5220	DP5125	DC2115	DC2215	DC2120	DC2220	DC3205	DC3210	DC3115	DC3215	DC3220	NC10	NC30	ND10	NA10	NA15	NA20	UMC10
	WNMG06T304-DM	6.5	9.525	3.97	3.81	0.4				○																								
	WNMG06T308-DM	6.5	9.525	3.97	3.81	0.8			○	○																								
	WNMG06T312-DM	6.5	9.525	3.97	3.81	1.2				○																								
	WNMG060408-DM	6.5	9.525	4.76	3.81	0.8		▲	●	▲	●											●												
	WNMG060412-DM	6.5	9.525	4.76	3.81	1.2			○	○																								
	WNMG080404-DM	8.7	12.7	4.76	5.16	0.4		▲	●	▲	○					○					○													
	WNMG080408-DM	8.7	12.7	4.76	5.16	0.8		▲	●	▲	●											○												
	WNMG080412-DM	8.7	12.7	4.76	5.16	1.2		▲	●	▲												○												
	WNMG080416-DM	8.7	12.7	4.76	5.16	1.6				○																								
	WNMG06T304-EM	6.5	9.525	3.97	3.81	0.4										○	▲					▲												
	WNMG06T308-EM	6.5	9.525	3.97	3.81	0.8										○	▲					▲												
	WNMG06T312-EM	6.5	9.525	3.97	3.81	1.2										○	▲					▲												
	WNMG060404-EM	6.5	9.525	4.76	3.81	0.4										○	▲					▲												
	WNMG060408-EM	6.5	9.525	4.76	3.81	0.8										●	▲					▲												
	WNMG080404-EM	8.7	12.7	4.76	5.16	0.4										●	▲					▲												
	WNMG080408-EM	8.7	12.7	4.76	5.16	0.8										●	▲					▲												
	WNMG080412-EM	8.7	12.7	4.76	5.16	1.2										●	▲					▲												
	WNMG060408-DR	6.5	9.525	4.76	3.81	0.8		○	○	○																			○					
	WNMG060412-DR	6.5	9.525	4.76	3.81	1.2			○	○	○																			○		○			
	WNMG080408-DR	8.7	12.7	4.76	5.16	0.8		○	○	▲	○																			●		●			
	WNMG080412-DR	8.7	12.7	4.76	5.16	1.2		○	○	▲	○																			●		●			
	WNMG080416-DR	8.7	12.7	4.76	5.16	1.6				○																				○		○			

CCMT

Insert Grades - Turning
車削刀片牌號一覽表

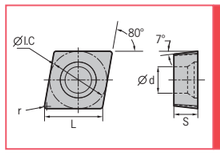

工件材料 Work Piece

P鋼	● ● ◐ ◐ ✣ ✣ ◐ ● ● ◐ ◐ ✣ ● ● ● ● ● ● ● ● ● ✣ ● ● ● ●
M不銹鋼	◐ ● ● ◐ ◐ ●
K鑄鐵	● ◐ ◐ ✣ ✣ ● ● ◐ ◐ ● ● ● ● ● ● ● ● ● ● ● ● ● ● ✣ ✣ ●
N有色金屬	● ◐ ✣ ●
S耐熱合金	● ●

刀片外形 Shape	型號 Specification	尺寸 Size L	ΦI.C	S	Φd	r	塗層硬質合金 Coated Carbide DC1115	DC1215	DC1120	DC1220	DC1130	DC1235	DP5015	DP5110	DP5215	DP5120	DP5220	DP5125	DC2115	DC2215	DC2120	DC2220	DC3205	DC3210	DC3115	DC3215	DC3220	硬質合金 Carbide NC10	NC30	ND10	NA10	NA15	NA20	金屬陶瓷 Cermet UMC10
	CCMT060202-HF	6.4	6.35	2.38	2.8	0.2		▲	●	▲						●																	○	
	CCMT060204-HF	6.4	6.35	2.38	2.8	0.4		▲	●	○	○					●																			
	CCMT060208-HF	6.4	6.35	2.38	2.8	0.8		▲	●		○					●					○													
	CCMT09T302-HF	9.7	9.525	3.97	4.4	0.2			●	○						●																	○	
	CCMT09T304-HF	9.7	9.525	3.97	4.4	0.4		▲	●	▲	○					●								●		●							○	
	CCMT09T308-HF	9.7	9.525	3.97	4.4	0.8		▲	●	○	○					●					○		○	○		○							○	○
	CCMT120404-HF	12.9	12.7	4.76	5.56	0.4	●	○	●	○																●		○							
	CCMT120408-HF	12.9	12.7	4.76	5.56	0.8		○																											
	CCMT060202-EF	6.4	6.35	2.38	2.8	0.2								○		●	▲			▲															
	CCMT060204-EF	6.4	6.35	2.38	2.8	0.4								○		●	▲			▲															
	CCMT09T302-EF	9.7	9.525	3.97	4.4	0.2								○		●	▲			▲															
	CCMT09T304-EF	9.7	9.525	3.97	4.4	0.4								○		●	▲			▲															
	CCMT09T308-EF	9.7	9.525	3.97	4.4	0.8								○		●	▲			○															
	CCMT120404-EF	12.9	12.7	4.76	5.56	0.4								○		●	▲			▲															
	CCMT120408-EF	12.9	12.7	4.76	5.56	0.8								○		●	▲			○															
	CCMT060204-HM	6.4	6.35	2.38	2.8	0.4		▲	●	▲	○					●					●			●		●								●	
	CCMT060208-HM	6.4	6.35	2.38	2.8	0.8		▲	●	○	○					●					○			○		●									
	CCMT09T304-HM	9.7	9.525	3.97	4.4	0.4	●	▲	●	▲	●					●					●			●		●									
	CCMT09T308-HM	9.7	9.525	3.97	4.4	0.8		▲	●	▲	●					●					●			●		●									
	CCMT120404-HM	12.9	12.7	4.76	5.56	0.4		▲	●	○	○										○			○		○									
	CCMT120408-HM	12.9	12.7	4.76	5.56	0.8		▲	●	▲	●					○					●			●		●									
	CCMT120412-HM	12.9	12.7	4.76	5.56	1.2		○	○																										
	CCMT060204-EM	6.4	6.35	2.38	2.8	0.4										●	▲				▲														
	CCMT060208-EM	6.4	6.35	2.38	2.8	0.8										●	▲				▲														
	CCMT09T304-EM	9.7	9.525	3.97	4.4	0.4										●	▲				▲														
	CCMT09T308-EM	9.7	9.525	3.97	4.4	0.8										●	▲				▲														
	CCMT120404-EM	12.9	12.7	4.76	5.56	0.4										●	▲				▲														
	CCMT120408-EM	12.9	12.7	4.76	5.56	0.8										●	▲				▲														
	CCMT120412-EM	12.9	12.7	4.76	5.56	1.2										●	▲				▲														

CCMT

Insert Grades - Turning
車削刀片牌號一覽表

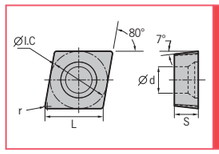

工件材料 Work Piece

P鋼	● ● ◐ ◐ ✣ ✣ ◐ ● ● ◐ ◐ ✣ ● ● ● ● ● ● ● ● ● ✣ ● ● ● ●
M不銹鋼	◐ ● ● ◐ ◐ ●
K鑄鐵	● ◐ ◐ ✣ ✣ ● ● ◐ ◐ ● ● ● ● ● ● ● ● ● ● ● ● ● ● ✣ ✣ ●
N有色金屬	● ◐ ✣ ●
S耐熱合金	● ●

刀片外形 Shape	型號 Specification	尺寸 Size L	ΦI.C	S	Φd	r	塗層硬質合金 Coated Carbide DC1115	DC1215	DC1120	DC1220	DC1130	DC1235	DP5015	DP5110	DP5215	DP5120	DP5220	DP5125	DC2115	DC2215	DC2120	DC2220	DC3205	DC3210	DC3115	DC3215	DC3220	硬質合金 Carbide NC10	NC30	ND10	NA10	NA15	NA20	金屬陶瓷 Cermet UMC10
	CCMT060204-HR	6.4	6.35	2.38	2.8	0.4		○	●	○	○					○																			
	CCMT060208-HR	6.4	6.35	2.38	2.8	0.8		○	●		●											●				●				○			●		
	CCMT09T304-HR	9.7	9.525	3.97	4.4	0.4			●		○					○																			
	CCMT09T308-HR	9.7	9.525	3.97	4.4	0.8		▲	●	▲	●											●		●	●	●				○			●		
	CCMT120408-HR	12.9	12.7	4.76	5.56	0.8		▲	●		●					○						●		●	●	●									
	CCMT120412-HR	12.9	12.7	4.76	5.56	1.2		○	●		●											○			●										
	CCGX060202-LC	6.4	6.35	2.38	2.8	0.2																											▲		
	CCGX060204-LC	6.4	6.35	2.38	2.8	0.4																											▲		
	CCGX09T302-LC	9.7	9.525	3.97	4.4	0.2																											▲		
	CCGX09T304-LC	9.7	9.525	3.97	4.4	0.4																											▲		
	CCGX09T308-LC	9.7	9.525	3.97	4.4	0.8																											▲		
	CCGX120404-LC	12.9	12.7	4.76	5.56	0.4																											▲		
	CCGX120408-LC	12.9	12.7	4.76	5.56	0.8																											▲		
	CCGX060202-LH	6.4	6.35	2.38	2.8	0.2																											▲		
	CCGX060204-LH	6.4	6.35	2.38	2.8	0.4																											▲	●	
	CCGX060208-LH	6.4	6.35	2.38	2.8	0.8																											▲		
	CCGX09T302-LH	9.7	9.525	3.97	4.4	0.2																											▲		
	CCGX09T304-LH	9.7	9.525	3.97	4.4	0.4																											▲	●	
	CCGX09T308-LH	9.7	9.525	3.97	4.4	0.8																											▲		
	CCGX120402-LH	12.9	12.7	4.76	5.56	0.2																											○		
	CCGX120404-LH	12.9	12.7	4.76	5.56	0.4																											▲		
	CCGX120408-LH	12.9	12.7	4.76	5.56	0.8																											▲		
	CCGX120412-LH	12.9	12.7	4.76	5.56	1.2																											○		

螺紋車刀片 Threading Insert
切槽車刀片 Grooving Insert
普通車刀片 Turning Inserts
銑刀片 Milling Inserts
鏜刀片 Boring Inserts
刀片 CARBIDE INSERTS

DCMT

Insert Grades - Turning
車削刀片牌號一覽表

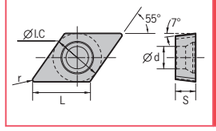

工件材料 Work Piece

P鋼	● ● ◐ ◐ ✣ ✣ ◐ ● ○ ◐ ◐ ✣ ○ ○ ○ ○ ○ ○ ○ ○ ○ ● ✣ ○ ○ ○ ●
M不銹鋼	○ ○ ○ ○ ○ ○ ◐ ● ○ ◐ ◐ ○ ◐ ● ◐ ◐ ○ ○ ○ ○ ○ ○ ○ ○ ○ ○ ○
K鑄鐵	○ ○ ○ ○ ○ ○ ○ ○ ○ ○ ○ ○ ○ ○ ○ ○ ● ◐ ◐ ✣ ✣ ○ ● ● ○ ✣ ○
N有色金屬	○ ● ◐ ✣ ○
S耐熱合金	○ ○ ○ ○ ○ ○ ○ ● ● ○ ○ ○ ○ ○ ○ ○ ○ ○ ○ ○ ○ ○ ○ ○ ● ○ ○

刀片外形 Shape	型號 Specification	尺寸 Size L	ΦI.C	S	Φd	r	塗層硬質合金 Coated Carbide DC1115	DC1215	DC1120	DC1220	DC1130	DC1235	DP5015	DP5110	DP5215	DP5120	DP5220	DP5125	DC2115	DC2215	DC2120	DC2220	DC3205	DC3210	DC3115	DC3215	DC3220	硬質合金 Carbide NC10	NC30	ND10	NA10	NA15	NA20	金屬陶瓷 Cermet UMC10
	DCMT070202-HF	7.8	6.35	2.38	2.8	0.2		▲	●	○						○																		
	DCMT070204-HF	7.8	6.35	2.38	2.8	0.4		▲	●	▲	○					●										○								
	DCMT070208-HF	7.8	6.35	2.38	2.8	0.8		○	○		○																							
	DCMT11T302-HF	11.6	9.525	3.97	4.4	0.2		▲	●	○						●																	○	
	DCMT11T304-HF	11.6	9.525	3.97	4.4	0.4		▲	●	▲	○					●												○					○	
	DCMT11T308-HF	11.6	9.525	3.97	4.4	0.8		▲	●	○						○								○		○								
	DCMT070202-EF	7.8	6.35	2.38	2.8	0.2								○		●	▲			▲						●		○						
	DCMT070204-EF	7.8	6.35	2.38	2.8	0.4								○		●	▲			▲														
	DCMT11T302-EF	11.6	9.525	3.97	4.4	0.2								○		●	▲			▲														
	DCMT11T304-EF	11.6	9.525	3.97	4.4	0.4								○		●	▲			▲														
	DCMT11T308-EF	11.6	9.525	3.97	4.4	0.8								○		●	▲			▲														
	DCMT070204-HM	7.8	6.35	2.38	2.8	0.4		▲	●	▲	●					●					●					●								
	DCMT070208-HM	7.8	6.35	2.38	2.8	0.8		▲	●	▲						○					○					○								
	DCMT11T304-HM	11.6	9.525	3.97	4.4	0.4	●	▲	●	▲	○					●					●			●		●		○					●	○
	DCMT11T308-HM	11.6	9.525	3.97	4.4	0.8	●	▲	●	▲	●					●					●			●		○								○
	DCMT11T312-HM	11.6	9.525	3.97	4.4	1.2			○																									
	DCMT070204-EM	7.8	6.35	2.38	2.8	0.4										●	▲				▲													
	DCMT070208-EM	7.8	6.35	2.38	2.8	0.8										●	▲				▲													
	DCMT11T304-EM	11.6	9.525	3.97	4.4	0.4										●	▲				▲													
	DCMT11T308-EM	11.6	9.525	3.97	4.4	0.8										●	▲				▲													
	DCMT11T304-HR	11.6	9.525	3.97	4.4	0.4		○	●	○	○										○					●		●						
	DCMT11T308-HR	11.6	9.525	3.97	4.4	0.8		●	●	▲	○										○			○	○	●		●						
	DCMT11T312-HR	11.6	9.525	3.97	4.4	1.2		○	●																									
	DCGX070201-LC	7.8	6.35	2.38	2.8	0.1																						▲						
	DCGX070202-LC	7.8	6.35	2.38	2.8	0.2																						▲						
	DCGX070204-LC	7.8	6.35	2.38	2.8	0.4																						▲						
	DCGX11T304-LC	11.6	9.525	3.97	4.4	0.4																						▲						
	DCGX11T308-LC	11.6	9.525	3.97	4.4	0.8																						▲						
	DCGX070202-LH	7.8	6.35	2.38	2.8	0.2																						▲						
	DCGX070204-LH	7.8	6.35	2.38	2.8	0.4																						▲	○					
	DCGX11T302-LH	11.6	9.525	3.97	4.4	0.2																						▲	○					
	DCGX11T304-LH	11.6	9.525	3.97	4.4	0.4																						▲	●					
	DCGX11T308-LH	11.6	9.525	3.97	4.4	0.8																						▲						

RCMT/SCMT

Insert Grades - Turning
車削刀片牌號一覽表

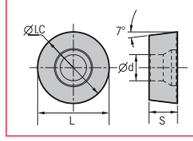

工件材料 Work Piece

P鋼	● ● ◐ ◐ ✣ ✣ ◐ ● ○ ◐ ◐ ✣ ○ ○ ○ ○ ○ ○ ○ ○ ○ ● ✣ ○ ○ ○ ●
M不銹鋼	○ ○ ○ ○ ○ ○ ◐ ● ○ ◐ ◐ ○ ◐ ● ◐ ◐ ○ ○ ○ ○ ○ ○ ○ ○ ○ ○ ○
K鑄鐵	○ ○ ○ ○ ○ ○ ○ ○ ○ ○ ○ ○ ○ ○ ○ ○ ● ◐ ◐ ✣ ✣ ○ ● ● ○ ✣ ○
N有色金屬	○ ● ◐ ✣ ○
S耐熱合金	○ ○ ○ ○ ○ ○ ○ ● ● ○ ○ ○ ○ ○ ○ ○ ○ ○ ○ ○ ○ ○ ○ ○ ● ○ ○

刀片外形 Shape	型號 Specification	尺寸 Size L	ΦI.C	S	Φd	r	塗層硬質合金 Coated Carbide DC1115	DC1215	DC1120	DC1220	DC1130	DC1235	DP5015	DP5110	DP5215	DP5120	DP5220	DP5125	DC2115	DC2215	DC2120	DC2220	DC3205	DC3210	DC3115	DC3215	DC3220	硬質合金 Carbide NC10	NC30	ND10	NA10	NA15	NA20	金屬陶瓷 Cermet UMC10
	RCMT0803M0	8	8	3.18	3.36	-				○																								
	RCMT10T3M0	10	10	3.97	4.4	-				○																								
	RCMT1204M0	12	12	4.76	4.4	-	○		●	▲														▲	▲	○								
	RCMT1606M0	16	16	6.35	5.5	-	○		●		●													▲										

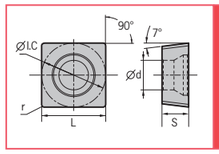

工件材料 Work Piece

P鋼	● ● ◐ ◐ ✣ ✣ ◐ ● ○ ◐ ◐ ✣ ○ ○ ○ ○ ○ ○ ○ ○ ○ ● ✣ ○ ○ ○ ●
M不銹鋼	○ ○ ○ ○ ○ ○ ◐ ● ○ ◐ ◐ ○ ◐ ● ◐ ◐ ○ ○ ○ ○ ○ ○ ○ ○ ○ ○ ○
K鑄鐵	○ ○ ○ ○ ○ ○ ○ ○ ○ ○ ○ ○ ○ ○ ○ ○ ● ◐ ◐ ✣ ✣ ○ ● ● ○ ✣ ○
N有色金屬	○ ● ◐ ✣ ○
S耐熱合金	○ ○ ○ ○ ○ ○ ○ ● ● ○ ○ ○ ○ ○ ○ ○ ○ ○ ○ ○ ○ ○ ○ ○ ● ○ ○

刀片外形 Shape	型號 Specification	尺寸 Size L	ΦI.C	S	Φd	r	塗層硬質合金 Coated Carbide DC1115	DC1215	DC1120	DC1220	DC1130	DC1235	DP5015	DP5110	DP5215	DP5120	DP5220	DP5125	DC2115	DC2215	DC2120	DC2220	DC3205	DC3210	DC3115	DC3215	DC3220	硬質合金 Carbide NC10	NC30	ND10	NA10	NA15	NA20	金屬陶瓷 Cermet UMC10
	SCMT09T302-HF	9.525	9.525	3.97	4.4	0.2		○	○								○																	
	SCMT09T304-HF	9.525	9.525	3.97	4.4	0.4		●	●	○																								
	SCMT09T308-HF	9.525	9.525	3.97	4.4	0.8		●	○								○								●	○		●					○	

SCMT/SCGX

Insert Grades - Turning
車削刀片牌號一覽表

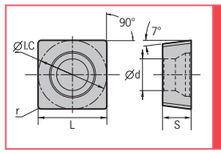

工件材料 Work Piece	
P鋼	● ● ◐ ◐ ✣ ✣ ◐ ● ● ◐ ◐ ✣ ● ✣ ●
M不銹鋼	◐ ● ◐ ◐ ◐ ◐ ◐ ● ● ◐ ◐ ◐ ◐
K鑄鐵	● ◐ ◐ ✣ ✣ ● ● ◐ ✣ ✣ ● ● ✣
N有色金屬	● ◐ ✣ ● ◐ ✣
S耐熱合金	● ● ● ●

刀片外形 Shape	型號 Specification	尺寸 Size L	ΦI.C	S	Φd	r	塗層硬質合金 Coated Carbide DC1115	DC1215	DC1120	DC1220	DC1130	DC1235	DP5015	DP5110	DP5215	DP5120	DP5220	DP5125	DC2115	DC2215	DC2120	DC2220	DC3205	DC3210	DC3115	DC3215	DC3220	硬質合金 Carbide NC10	NC30	ND10	NA10	NA15	NA20	金屬陶瓷 Cermet UMC10
	SCMT09T304-HM	9.525	9.525	3.97	4.4	0.4		○	●								○				●			●		●									
	SCMT09T308-HM	9.525	9.525	3.97	4.4	0.8		●	●	○	●						○				●			●	●										
	SCMT120404-HM	12.7	12.7	4.76	5.56	0.4		○	●		○										●					●									
	SCMT120408-HM	12.7	12.7	4.76	5.56	0.8		●	●	○	○			●			○				●			●					○						
	SCMT120412-HM	12.7	12.7	4.76	5.56	1.2		○	○												○									○					
	SCMT09T304-EM	9.525	9.525	3.97	4.4	0.4										●	▲					▲													
	SCMT09T308-EM	9.525	9.525	3.97	4.4	0.8										●	▲					▲													
	SCMT120404-EM	12.7	12.7	4.76	5.56	0.4										●	▲					▲													
	SCMT120408-EM	12.7	12.7	4.76	5.56	0.8										●	▲					▲													
	SCMT120412-EM	12.7	12.7	4.76	5.56	1.2										●	▲					▲													
	SCGX09T302-LH	9.525	9.525	3.97	4.4	0.2																										○			
	SCGX09T304-LH	9.525	9.525	3.97	4.4	0.4																										○			
	SCGX09T308-LH	9.525	9.525	3.97	4.4	0.8																										▲			
	SCGX120404-LH	12.7	12.7	4.76	5.56	0.4																										○			
	SCGX120408-LH	12.7	12.7	4.76	5.56	0.8																										▲			
	SCMT09T304-HR	9.525	9.525	3.97	4.4	0.4		▲	●		●					●										○									
	SCMT09T308-HR	9.525	9.525	3.97	4.4	0.8		▲	○		●													●		●									
	SCMT09T312-HR	9.525	9.525	3.97	4.4	1.2		▲																											
	SCMT120404-HR	12.7	12.7	4.76	5.56	0.4		○	●		○																								
	SCMT120408-HR	12.7	12.7	4.76	5.56	0.8		▲	●	○	●					○							○	●		●									
	SCMT120412-HR	12.7	12.7	4.76	5.56	1.2		○	○		●												○	○											

TCGT

Insert Grades - Turning
車削刀片牌號一覽表

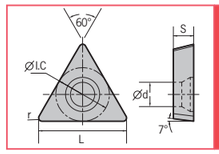

工件材料 Work Piece	
P鋼	● ● ◐ ◐ ✣ ✣ ◐ ● ● ◐ ◐ ✣ ● ✣ ●
M不銹鋼	◐ ● ◐ ◐ ◐ ◐ ◐ ● ● ◐ ◐ ◐ ◐
K鑄鐵	● ◐ ◐ ✣ ✣ ● ● ◐ ✣ ✣ ● ● ✣
N有色金屬	● ◐ ✣ ● ◐ ✣
S耐熱合金	● ● ● ●

刀片外形 Shape	型號 Specification	尺寸 Size L	ΦI.C	S	Φd	r	塗層硬質合金 Coated Carbide DC1115	DC1215	DC1120	DC1220	DC1130	DC1235	DP5015	DP5110	DP5215	DP5120	DP5220	DP5125	DC2115	DC2215	DC2120	DC2220	DC3205	DC3210	DC3115	DC3215	DC3220	硬質合金 Carbide NC10	NC30	ND10	NA10	NA15	NA20	金屬陶瓷 Cermet UMC10
	TCMT06T104-HF	6.4	3.97	1.98	2.2	0.4		○																											
	TCMT06T108-HF	6.4	3.97	1.98	2.2	0.8		○																											
	TCMT090202-HF	9.6	5.56	2.38	2.5	0.2		▲	●																								○		
	TCMT090204-HF	9.6	5.56	2.38	2.5	0.4		▲	●																								○		
	TCMT090208-HF	9.6	5.56	2.38	2.5	0.8			○																		○								
	TCMT110202-HF	11	6.35	2.38	2.8	0.2			●							●																			
	TCMT110204-HF	11	6.35	2.38	2.8	0.4	●	▲	●	▲												●				●									
	TCMT110208-HF	11	6.35	2.38	2.8	0.8		○	●	○						●						○			○								○		
	TCMT16T302-HF	16.5	9.525	3.97	4.4	0.2		○																											
	TCMT16T304-HF	16.5	9.525	3.97	4.4	0.4		●	●							○										●									
	TCMT16T308-HF	16.5	9.525	3.97	4.4	0.8		○	●																								○		
	TCMT090202-EF	9.6	5.56	2.38	2.5	0.2							○			●	▲					▲													
	TCMT090204-EF	9.6	5.56	2.38	2.5	0.4							○			●	▲					▲													
	TCMT110202-EF	11	6.35	2.38	2.8	0.2							○			●	▲					▲													
	TCMT110204-EF	11	6.35	2.38	2.8	0.4							○			●	▲					▲													
	TCMT110208-EF	11	6.35	2.38	2.8	0.8							○			●	▲					○													
	TCMT16T304-EF	16.5	9.525	3.97	4.4	0.4							○			●	▲					▲													
	TCMT16T308-EF	16.5	9.525	3.97	4.4	0.8							○			●	▲					○													
	TCMT090204-EM	9.6	5.56	2.38	2.5	0.4										●	▲										▲								
	TCMT090208-EM	9.6	5.56	2.38	2.5	0.8										●	▲										▲								
	TCMT110204-EM	11	6.35	2.38	2.8	0.4										●	▲										▲								
	TCMT110208-EM	11	6.35	2.38	2.8	0.8										●	▲										▲								
	TCMT110212-EM	11	6.35	2.38	2.8	1.2										●	▲										▲								
	TCMT16T304-EM	16.5	9.525	3.97	4.4	0.4										●	▲										▲								
	TCMT16T308-EM	16.5	9.525	3.97	4.4	0.8										●	▲										▲								
	TCMT16T312-EM	16.5	9.525	3.97	4.4	1.2										●	▲										▲								

TCMT

Insert Grades - Turning
車削刀片牌號一覽表

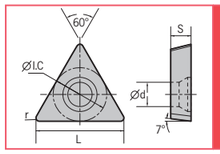

工件材料 Work Piece

P鋼	●	●	◕	◕	✣	◕	●		◕	◕	✣											●	✣					●		
M不銹鋼						◕	●		◕	◕		◕	●	◕	◕															
K鑄鐵																●	◕	◕	✣	✣			●	●		✣				
N有色金屬																								●	◕	✣				
S耐熱合金								●	●																●					

刀片外形 Shape	型號 Specification	尺寸 Size					塗層硬質合金 Coated Carbide																					硬質合金 Carbide						金屬陶瓷 Cermet
		L	ΦI.C	S	Φd	r	DC1115	DC1215	DC1120	DC1220	DC1130	DC1235	DP5015	DP5110	DP5215	DP5120	DP5220	DP5125	DC2115	DC2215	DC2120	DC2220	DC3205	DC3210	DC3115	DC3215	DC3220	NC10	NC30	ND10	NA10	NA15	NA20	UMC10
	TCMT090204-HM	9.6	5.56	2.38	2.5	0.4		▲	●		○										○					●							
	TCMT090208-HM	9.6	5.56	2.38	2.5	0.8		○	●		○																						
	TCMT110204-HM	11	6.35	2.38	2.8	0.4		▲	●	○	○						●				●			●		●							
	TCMT110208-HM	11	6.35	2.38	2.8	0.8		▲	●		○										●					●							
	TCMT16T304-HM	16.5	9.525	3.97	4.4	0.4		▲	●	▲	●										●			○		●							
	TCMT16T308-HM	16.5	9.525	3.97	4.4	0.8		▲	●	▲	●										●			●		●					○		
	TCMT16T312-HM	16.5	9.525	3.97	4.4	1.2			●		●										○												
	TCMT090204-HR	9.6	5.56	2.38	2.5	0.4			○																								
	TCMT090208-HR	9.6	5.56	2.38	2.5	0.8																				○						●	
	TCMT110204-HR	11	6.35	2.38	2.8	0.4			○																								
	TCMT110208-HR	11	6.35	2.38	2.8	0.8			○																								
	TCMT16T304-HR	16.5	9.525	3.97	4.4	0.4		○	●																								
	TCMT16T308-HR	16.5	9.525	3.97	4.4	0.8		●	●		●														●	●							
	TCMT16T312-HR	16.5	9.525	3.97	4.4	1.2		○	●																●	●						○	
	TCMT220408-HR	22	12.7	4.76	5.5	0.8		○	●		○											●											
	TCGX090202-LC	9.6	5.56	2.38	2.5	0.2																									▲		
	TCGX090204-LC	9.6	5.56	2.38	2.5	0.4																									▲		
	TCGX110202-LC	11	6.35	2.38	2.8	0.2																									▲		
	TCGX110204-LC	11	6.35	2.38	2.8	0.4																									▲		
	TCGX110208-LC	11	6.35	2.38	2.8	0.8																									▲		
	TCGX16T304-LC	16.5	9.525	3.97	4.4	0.4																									▲		
	TCGX16T308-LC	16.5	9.525	3.97	4.4	0.8																									▲		
	TCGX090202-LH	9.6	5.56	2.38	2.5	0.2																									▲		
	TCGX090204-LH	9.6	5.56	2.38	2.5	0.4																									▲		
	TCGX110202-LH	11	6.35	2.38	2.8	0.2																									▲		
	TCGX110204-LH	11	6.35	2.38	2.8	0.4																									▲		
	TCGX110208-LH	11	6.35	2.38	2.8	0.8																									▲		
	TCGX16T302-LH	16.5	9.525	3.97	4.4	0.2																									○		
	TCGX16T304-LH	16.5	9.525	3.97	4.4	0.4																									▲		
	TCGX16T308-LH	16.5	9.525	3.97	4.4	0.8																									▲		
	TCMT220408-TM	22	12.7	4.76	5.5	0.8	○		●																	○		○					○

VCGX

Insert Grades - Turning
車削刀片牌號一覽表

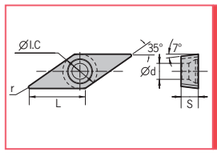

工件材料 Work Piece

P鋼	●	●	◕	◕	✣	✣	◕	●		◕	◕	✣													●	✣				●
M不銹鋼							◕	●		◕	◕		◕	●	◕	◕															
K鑄鐵																	●	◕	◕	✣	✣			●	●		✣			
N有色金屬																										●	◕	✣		
S耐熱合金								●	●																			●		

刀片外形 Shape	型號 Specification	尺寸 Size					塗層硬質合金 Coated Carbide																					硬質合金 Carbide						金屬陶瓷 Cermet
		L	ΦI.C	S	Φd	r	DC1115	DC1215	DC1120	DC1220	DC1130	DC1235	DP5015	DP5110	DP5215	DP5120	DP5220	DP5125	DC2115	DC2215	DC2120	DC2220	DC3205	DC3210	DC3115	DC3215	DC3220	NC10	NC30	ND10	NA10	NA15	NA20	UMC10
	VCGX110301-LC	11	6.35	3.18	2.8	0.1																									▲		
	VCGX110302-LC	11	6.35	3.18	2.8	0.2																									▲		
	VCGX110304-LC	11	6.35	3.18	2.8	0.4																									▲		
	VCGX110308-LC	11	6.35	3.18	2.8	0.8																									▲		
	VCGX160404-LC	16.6	9.525	4.76	4.4	0.4																									▲		
	VCGX160408-LC	16.6	9.525	4.76	4.4	0.8																									▲		
	VCGX160412-LC	16.6	9.525	4.76	4.4	1.2																									▲		
	VCGX110202-LH	11	6.35	2.38	2.8	0.2																									○		
	VCGX110204-LH	11	6.35	2.38	2.8	0.4																									▲		
	VCGX110301-LH	11	6.35	3.18	2.8	0.1																									▲	●	
	VCGX110302-LH	11	6.35	3.18	2.8	0.2																									▲	●	
	VCGX110304-LH	11	6.35	3.18	2.8	0.4																									▲	●	
	VCGX110308-LH	11	6.35	3.18	2.8	0.8																									○		
	VCGX160402-LH	16.6	9.525	4.76	4.4	0.2																									▲	○	
	VCGX160404-LH	16.6	9.525	4.76	4.4	0.4																									▲	○	
	VCGX160408-LH	16.6	9.525	4.76	4.4	0.8																									▲	●	
	VCGX160412-LH	16.6	9.525	4.76	4.4	1.2																									▲	●	

VBGT/VBMT

Insert Grades - Turning
車削刀片牌號一覽表

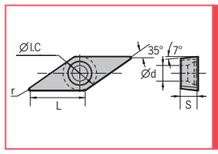

工件材料 Work Piece	DC1115	DC1215	DC1120	DC1220	DC1130	DC1235	DP5015	DP5110	DP5215	DP5120	DP5220	DP5125	DC2115	DC2215	DC2120	DC2220	DC3205	DC3210	DC3115	DC3215	DC3220	NC10	NC30	ND10	NA10	NA15	NA20	UMC10
P鋼	●	●	◕	◕	❖	❖	◕	●		◕	◕	❖										●	❖				●	
M不銹鋼							◕	●		◕	◕		◕	●	●	◕												
K鑄鐵																	●	◕	◕	❖	❖			●	●		❖	
N有色金屬																									●	◕	❖	
S耐熱合金								●	●																	●		

刀片外形 Shape	型號 Specification	尺寸 Size L	ΦI.C	S	Φd	r	塗層硬質合金 Coated Carbide																硬質合金 Carbide						金屬陶瓷 Cermet
							DC1115	DC1215	DC1120	DC1220	DC1130	DC1235	DP5015	DP5110	DP5215	DP5120	DP5220	DP5125	DC2115	DC2215	DC2120	DC2220	DC3205	DC3210	DC3115	DC3215	DC3220	NC10	NC30	ND10	NA10	NA15	NA20	UMC10
	**VBGT110302-SF**	11	6.35	3.18	2.8	0.2								○																			
	VBGT110304-SF	11	6.35	3.18	2.8	0.4								○																			
	**VBMT110302-EF**	11	6.35	3.18	2.8	0.2								○		●	▲			▲													
	VBMT110304-EF	11	6.35	3.18	2.8	0.4								○		●	▲			▲													
	VBMT110308-EF	11	6.35	3.18	2.8	0.8								○		●	▲			○													
	VBMT160404-EF	16.5	9.525	4.76	4.4	0.4								○		●	▲			▲													
	VBMT160408-EF	16.5	9.525	4.76	4.4	0.8								○		●	▲			○													
	**VBMT110202-HF**	11	6.35	2.38	2.8	0.2			●		○					●										○							
	VBMT110204-HF	11	6.35	2.38	2.8	0.4			●							○																	
	VBMT110208-HF	11	6.35	2.38	2.8	0.8			●							○																	
	**VBMT110304-EM**	11	6.35	3.18	2.8	0.4										●	▲					▲											
	VBMT110308-EM	11	6.35	3.18	2.8	0.8										●	▲					▲											
	**VBMT160404-HM**	16.5	9.525	4.76	4.4	0.4		▲	●	▲	●					●					●			●								○	
	VBMT160408-HM	16.5	9.525	4.76	4.4	0.8		▲	●	▲	●					●					●			●	●							○	
	VBMT160412-HM	16.5	9.525	4.76	4.4	1.2			●							○					○			○	●			○				○	

MGMN/ZTED

Insert Grades - Grooving
槽刀片牌號一覽表

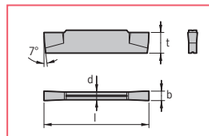

工件材料 Work Piece	DC1120	DP2130	DP3115	DP5220	DP5125	NA20
P鋼	◕			◕	❖	
M不銹鋼		❖		◕	❖	
K鑄鐵			◕	◕	❖	
N有色金屬						◕
S耐熱合金					❖	

刀片外形 Shape	型號 Specification	尺寸 Size b	r	l	d	t	塗層硬質合金 Coated Carbide DC1120	DP2130	DP3115	DP5220	DP5125	金屬陶瓷 Cermet NA20
	**MGMN150-G**	1.5	0.15	16	1.2	3.5	●	●				●
	MGMN200-G	2	0.2	16	1.6	3.5	●	●				●
	MGMN250-G	2.5	0.2	18.5	2	3.85	●	●				●
	MGMN300-G	3	0.4	21	2.35	4.8	●	●				●
	MGMN400-G	4	0.4	21	3.3	4.8	●	●				

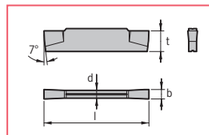

工件材料 Work Piece	DC1120	DP2130	DP3115	DP5220	DP5125	NA20
P鋼	◕			◕	❖	
M不銹鋼		❖		◕	❖	
K鑄鐵			◕	◕	❖	
N有色金屬						◕
S耐熱合金					❖	

刀片外形 Shape	型號 Specification	尺寸 Size b	r	l	d	t	塗層硬質合金 Coated Carbide DC1120	DP2130	DP3115	DP5220	DP5125	金屬陶瓷 Cermet NA20
	**MGMN200-M**	2	0.2	16	1.2	3.5	▲	▲	●			●
	MGMN250-M	2.5	0.2	18.5	2	3.85	●	●				●
	MGMN300-M	3	0.4	21	2.35	4.8	▲	▲	●			●
	MGMN400-M	4	0.4	21	3.3	4.8	●	●	●			●
	MGMN500-M	5	0.8	26	4.1	5.8	●					●
	MGMN600-M	6	0.8	26	5	5.8	●					
	MGMN800-M	8	0.8	31	6	6.5	●					

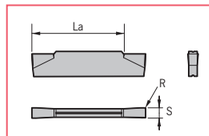

工件材料 Work Piece	DC1120	DP2130	DP3115	DP5220	DP5125	NA20
P鋼	◕			◕	❖	
M不銹鋼		❖		◕	❖	
K鑄鐵			◕	◕	❖	
N有色金屬						◕
S耐熱合金					❖	

刀片外形 Shape	型號 Specification	尺寸 Size $S^{+0.1}_{0}$	R±0.10	最大切深 La max	塗層硬質合金 Coated Carbide DC1120	DP2130	DP3115	DP5220	DP5125	金屬陶瓷 Cermet NA20
	**ZTED02503-MG**	2.5	0.3	17				●	●	
	ZTFD0303-MG	3	0.3	17				●	●	
	ZTGD0404-MG	4	0.4	22				●	●	
	ZTHD0504-MG	5	0.4	22				●	●	
	ZTKD0608-MG	6	0.8	22				●	●	

60°通用螺紋刀片

Partial Profile 60°
60°通用型螺紋刀片

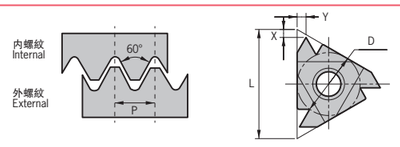

工件材料 Work Piece

P鋼	●	◕	
M不銹鋼		◕	
K鑄鐵		◕	
N有色金屬			◕
S耐熱合金			

注：Notice: ● 連續加工 Continuous ◕ 輕斷續加工 Medium ✪ 斷續加工 Interrupted

刀片外形 Shape	型號 Specification 右旋螺紋 Right Hand	左旋螺紋 Left Hand	內接圓直徑D Dia	加工螺紋範圍 TPI mm	TPI	刀片尺寸 Size L	X	Y	T	硬質合金 Solid Carbide DP1120	DP2120	NA20
	11ERA60	11ELA60	1/4″	0.5-1.5	48-16	11	0.8	0.9	3.2	●	●	●
	16ERA60	16ELA60	3/8″	0.5-1.5	48-16	16	0.8	0.9	3.65	●	●	●
	16ERAG60	16ELAG60	3/8″	0.5-3.0	48-8	16	1.2	1.7	3.65	●	●	●
	16ERG60	16ELG60	3/8″	1.75-3.0	14-8	16	1.2	1.7	3.65	●	●	●
	22ERN60	22ELN60	1/2″	3.5-5.0	7-5	22	1.7	2.5	4.76	●	●	●
	27ERQ60	27ELQ60	5/8″	5.5-6.0	4.5-4	27	2.1	3.1	6.35	○	○	○

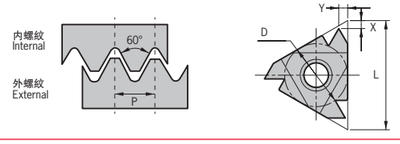

工件材料 Work Piece

P鋼	●	◕	
M不銹鋼		◕	
K鑄鐵		◕	
N有色金屬			◕
S耐熱合金			

刀片外形 Shape	型號 Specification 右旋螺紋 Right Hand	左旋螺紋 Left Hand	內接圓直徑D Dia	加工螺紋範圍 TPI mm	TPI	刀片尺寸 Size L	X	Y	T	硬質合金 Solid Carbide DP1120	DP2120	NA20
	06IRA60	06ILA60	5/32″	0.5-1.25	48-20	6	0.6	0.6	1.9	○	○	○
	08IRA60	08ILA60	3/16″	0.5-1.5	48-16	8	0.6	0.7	2.2	○	○	○
	11IRA60	11ILA60	1/4″	0.5-1.5	48-16	11	0.8	0.9	3.2	●	●	●
	16IRA60	16ILA60	3/8″	0.5-1.5	48-16	16	0.8	0.9	3.65	●	●	●
	16IRAG60	16ILAG60	3/8″	0.5-3.0	48-8	16	1.2	1.7	3.65	●	●	●
	16IRG60	16ILG60	3/8″	1.75-3.0	14-8	16	1.2	1.7	3.65	●	●	●
	22IRN60	22ILN60	1/2″	3.5-5.0	7-5	22	1.7	2.5	4.76	●	●	●
	27IRQ60	27ILQ60	5/8″	5.5-6.0	4.5-4	27	2.1	3.1	6.35	○	○	○

55°通用螺紋刀片

Partial Profile 55°
55°通用型螺紋刀片

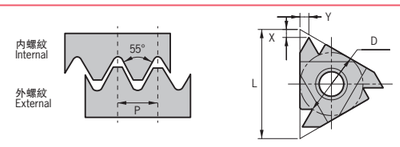

工件材料 Work Piece

P鋼	●	◕	
M不銹鋼		◕	
K鑄鐵		◕	
N有色金屬			◕
S耐熱合金			

刀片外形 Shape	型號 Specification 右旋螺紋 Right Hand	左旋螺紋 Left Hand	內接圓直徑D Dia	加工螺紋範圍 TPI mm	TPI	刀片尺寸 Size L	X	Y	T	硬質合金 Solid Carbide DP1120	DP2120	NA20
	11ERA55	11ELA55	1/4″	0.5-1.5	48-16	11	0.8	0.9	3.2	○	○	○
	16ERA55	16ELA55	3/8″	0.5-1.5	48-16	16	0.8	0.9	3.65	○	○	○
	16ERAG55	16ELAG55	3/8″	0.5-3.0	48-8	16	1.2	1.7	3.65	○	○	○
	16ERG55	16ELG55	3/8″	1.75-3.0	14-8	16	1.2	1.7	3.65	○	○	○
	22ERN55	22ELN55	1/2″	3.5-5.0	7-5	22	1.7	2.5	4.76	○	○	○
	27ERQ55	27ELQ55	5/8″	5.5-6.0	4.5-4	27	2	2.9	6.35	○	○	○

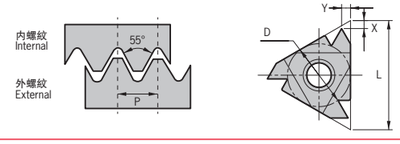

工件材料 Work Piece

P鋼	●	◕	
M不銹鋼		◕	
K鑄鐵		◕	
N有色金屬			◕
S耐熱合金			

刀片外形 Shape	型號 Specification 右旋螺紋 Right Hand	左旋螺紋 Left Hand	內接圓直徑D Dia	加工螺紋範圍 TPI mm	TPI	刀片尺寸 Size L	X	Y	T	硬質合金 Solid Carbide DP1120	DP2120	NA20
	06IRA55	006ILA55	5/32″	0.5-1.25	48-20	6	0.6	0.6	1.9	○	○	○
	08IRA55	08ILA55	3/16″	0.5-1.5	48-16	8	0.6	0.7	2.2	○	○	○
	11IRA55	11ILA55	1/4″	0.5-1.5	48-16	11	0.8	0.9	3.2	○	○	○
	16IRA55	16ILA55	3/8″	0.5-1.5	48-16	16	0.8	0.9	3.65	○	○	○
	16IRAG55	16ILAG55	3/8″	0.5-3.0	48-8	16	1.2	1.7	3.65	○	○	○
	16IRG55	16ILG55	3/8″	1.75-3.0	14-8	16	1.2	1.7	3.65	○	○	○
	22IRN55	22ILN55	1/2″	3.5-5.0	7-5	22	1.7	2.5	4.76	○	○	○
	27IRQ55	27ILQ55	5/8″	5.5-6.0	4.5-4	27	1.8	2.7	6.35	○	○	○

ISO标准型螺纹刀片

ISO Metric Full Profile
ISO標準型螺紋刀片

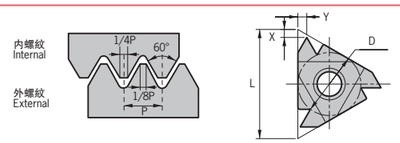

工件材料 Work Piece				
P鋼	●	●	
M不銹鋼		●	
K鑄鐵		●	
N有色金屬			●
S耐熱合金			

刀片外形 Shape	型號 Specification 右旋螺紋 Right Hand	左旋螺紋 Left Hand	內接圓直徑D Dia	加工螺紋範圍 TPI mm	TPI	刀片尺寸 Size L	X	Y	T	硬質合金 Solid Carbide DP1120	DP2120	NA20
	11ER0.50ISO	11EL0.50ISO	1/4″	0.5	-	11	0.6	0.6	3.2	●	●	●
	11ER0.75ISO	11EL0.75ISO	1/4″	0.75	-	11	0.6	0.6	3.2	●	●	●
	11ER1.00ISO	11EL1.00ISO	1/4″	1	-	11	0.7	0.7	3.2	●	●	●
	11ER1.25ISO	11EL1.25ISO	1/4″	1.25	-	11	0.8	0.9	3.2	●	●	●
	11ER1.50ISO	11EL1.50ISO	1/4″	1.5	-	11	0.8	1	3.2	●	●	●
	11ER1.75ISO	11EL1.75ISO	1/4″	1.75	-	11	0.8	1.1	3.2	●	●	●
	16ER0.50ISO	16EL0.50ISO	3/8″	0.5	-	16	0.6	0.6	3.65	●	●	●
	16ER0.75ISO	16EL0.75ISO	3/8″	0.75	-	16	0.6	0.6	3.65	●	●	●
	16ER1.00ISO	16EL1.00ISO	3/8″	1	-	16	0.7	0.7	3.65	●	●	●
	16ER1.25ISO	16EL1.25ISO	3/8″	1.25	-	16	0.8	0.9	3.65	●	●	●
	16ER1.50ISO	16EL1.50ISO	3/8″	1.5	-	16	0.8	1	3.65	●	●	●
	16ER1.75ISO	16EL1.75ISO	3/8″	1.75	-	16	0.9	1.2	3.65	●	●	●
	16ER2.00ISO	16EL2.00ISO	3/8″	2	-	16	1	1.3	3.65	●	●	●
	16ER2.50ISO	16EL2.50ISO	3/8″	2.5	-	16	1.1	1.5	3.65	●	●	●
	16ER3.00ISO	16EL3.00ISO	3/8″	3	-	16	1.2	1.6	3.65	●	●	●
	22ER3.50ISO	22EL3.50ISO	1/2″	3.5	-	22	1.6	2.3	4.76	●	●	●
	22ER4.00ISO	22EL4.00ISO	1/2″	4	-	22	1.6	2.3	4.76	●	●	●
	22ER4.50ISO	22EL4.50ISO	1/2″	4.5	-	22	1.7	2.4	4.76	●	●	●
	22ER5.00ISO	22EL5.00ISO	1/2″	5	-	22	1.7	2.5	4.76	●	●	●
	27ER5.50ISO	27EL5.50ISO	5/8″	5.5	-	27.5	1.9	2.7	6.35	○	○	○
	27ER6.00ISO	27EL6.00ISO	5/8″	6	-	27.5	2	2.9	6.35	○	○	○

ISO标准型螺纹刀片

ISO Metric Full Profile
ISO標準型螺紋刀片

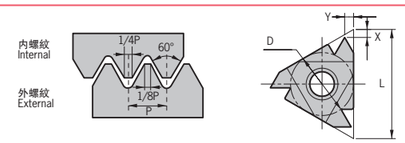

工件材料 Work Piece				
P鋼	●	●	
M不銹鋼		●	
K鑄鐵		●	
N有色金屬			●
S耐熱合金			

刀片外形 Shape	型號 Specification 右旋螺紋 Right Hand	左旋螺紋 Left Hand	內接圓直徑D Dia	加工螺紋範圍 TPI mm	TPI	刀片尺寸 Size L	X	Y	T	硬質合金 Solid Carbide DP1120	DP2120	NA20
	06IR0.50ISO	06IL0.50ISO	5/32″	0.5	-	6	0.9	0.5	1.9	○	○	○
	06IR0.75ISO	06IL0.75ISO	5/32″	0.75	-	6	0.8	0.5	1.9	○	○	○
	06IR1.00ISO	06IL1.00ISO	5/32″	1	-	6	0.7	0.6	1.9	○	○	○
	06IR1.25ISO	06IL1.25ISO	5/32″	1.25	-	6	0.6	0.6	1.9	○	○	○
	08IR0.50ISO	08IL0.50ISO	3/16″	0.5	-	8	0.6	0.5	2.2	○	○	○
	08IR0.75ISO	08IL0.75ISO	3/16″	0.75	-	8	0.6	0.5	2.2	○	○	○
	08IR1.00ISO	08IL1.00ISO	3/16″	1	-	8	0.6	0.6	2.2	○	○	○
	08IR1.25ISO	08IL1.25ISO	3/16″	1.25	-	8	0.6	0.7	2.2	○	○	○
	08IR1.50ISO	08IL1.50ISO	3/16″	1.5	-	8	0.6	0.7	2.2	○	○	○
	08IR1.75ISO	08IL1.75ISO	3/16″	1.75	-	8	0.6	0.8	2.2	○	○	○
	11IR0.50ISO	11IL0.50ISO	1/4″	0.5	-	11	0.6	0.6	3.2	●	●	●
	11IR0.75ISO	11IL0.75ISO	1/4″	0.75	-	11	0.6	0.6	3.2	●	●	●
	11IR1.00ISO	11IL1.00ISO	1/4″	1	-	11	0.6	0.7	3.2	●	●	●
	11IR1.25ISO	11IL1.25ISO	1/4″	1.25	-	11	0.8	0.9	3.2	●	●	●
	11IR1.50ISO	11IL1.50ISO	1/4″	1.5	-	11	0.8	1	3.2	●	●	●
	11IR1.75ISO	11IL1.75ISO	1/4″	1.75	-	11	0.9	1.1	3.2	●	●	●
	11IR2.00ISO	11IL2.00ISO	1/4″	2	-	11	1	1.3	3.2	●	●	●
	16IR0.50ISO	16IL0.50ISO	3/8″	0.5	-	16	0.6	0.6	3.65	●	●	●
	16IR0.75ISO	16IL0.75ISO	3/8″	0.75	-	16	0.6	0.6	3.65	●	●	●
	16IR1.00ISO	16IL1.00ISO	3/8″	1	-	16	0.6	0.7	3.65	●	●	●
	16IR1.25ISO	16IL1.25ISO	3/8″	1.25	-	16	0.8	0.9	3.65	●	●	●
	16IR1.50ISO	16IL1.50ISO	3/8″	1.5	-	16	0.8	1	3.65	●	●	●
	16IR1.75ISO	16IL1.75ISO	3/8″	1.75	-	16	0.9	1.2	3.65	●	●	●
	16IR2.00ISO	16IL2.00ISO	3/8″	2	-	16	1	1.3	3.65	●	●	●
	16IR2.50ISO	16IL2.50ISO	3/8″	2.5	-	16	1.1	1.5	3.65	●	●	●
	16IR3.00ISO	16IL3.00ISO	3/8″	3	-	16	1.1	1.5	3.65	●	●	●
	22IR3.50ISO	22IL3.50ISO	1/2″	3.5	-	22	1.6	2.3	4.76	●	●	●
	22IR4.00ISO	22IL4.00ISO	1/2″	4	-	22	1.6	2.3	4.76	●	●	●
	22IR4.50ISO	22IL4.50ISO	1/2″	4.5	-	22	1.7	2.4	4.76	●	●	●
	22IR5.00ISO	22IL5.00ISO	1/2″	5	-	22	1.7	2.5	4.76	●	●	●
	27IR5.50ISO	27IL5.50ISO	5/8″	5.5	-	27.5	1.9	2.7	6.35	○	○	○
	27IR6.00ISO	27IL6.00ISO	5/8″	6	-	27.5	2	2.9	6.35	○	○	○

螺紋車刀片 Threading Insert
切槽車刀片 Grooving Insert
普通車刀片 Turning Inserts
銑刀片 Milling Inserts
鏜刀片 Boring Inserts
刀片 CARBIDE INSERTS

UN通用螺纹刀片

UN-60° American UN Full Profile
UN-60°美制統一標準螺紋刀片

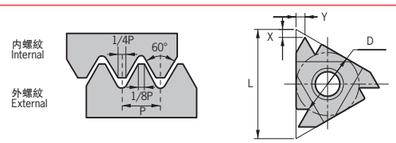

工件材料 Work Piece

P鋼	●	●	
M不銹鋼		●	
K鑄鐵		●	
N有色金屬			●
S耐熱合金			

刀片外形 Shape	型號 Specification 右旋螺紋 Right Hand	左旋螺紋 Left Hand	內接圓直徑D Dia	加工螺紋範圍 TPI mm	TPI	刀片尺寸 Size L	X	Y	T	硬質合金 Solid Carbide DP1120	DP2120	NA20
	11ER32UN	11EL32UN	1/4″	-	32	11	0.6	0.6	3.2	●	●	●
	11ER28UN	11EL28UN	1/4″	-	28	11	0.6	0.7	3.2	●	●	●
	11ER24UN	11EL24UN	1/4″	-	24	11	0.7	0.8	3.2	●	●	●
	11ER20UN	11EL20UN	1/4″	-	20	11	0.8	0.9	3.2	●	●	●
	11ER18UN	11EL18UN	1/4″	-	18	11	0.8	1	3.2	●	●	●
	11ER16UM	11EL16UM	1/4″	-	16	11	0.9	1.1	3.2	●	●	●
	16ER32UN	16EL32UN	3/8″	-	32	16	0.6	0.6	3.65	●	●	●
	16ER28UN	16EL28UN	3/8″	-	28	16	0.6	0.7	3.65	●	●	●
	16ER24UN	16EL24UN	3/8″	-	24	16	0.7	0.8	3.65	●	●	●
	16ER20UN	16EL20UN	3/8″	-	20	16	0.8	0.9	3.65	●	●	●
	16ER18UN	16EL18UN	3/8″	-	18	16	0.8	1	3.65	●	●	●
	16ER16UN	16EL16UN	3/8″	-	16	16	0.9	1.1	3.65	●	●	●
	16ER14UN	16EL14UN	3/8″	-	14	16	1	1.2	3.65	●	●	●
	16ER13UN	16EL13UN	3/8″	-	13	16	1.1	1.3	3.65	●	●	●
	16ER12UN	16EL12UN	3/8″	-	12	16	1.1	1.4	3.65	●	●	●
	16ER11UN	16EL11UN	3/8″	-	11	16	1.1	1.5	3.65	●	●	●
	16ER10UN	16EL10UN	3/8″	-	10	16	1.1	1.5	3.65	●	●	●
	16ER9UN	16EL9UN	3/8″	-	9	16	1.2	1.7	3.65	●	●	●
	16ER8UN	16EL8UN	3/8″	-	8	16	1.2	2	3.65	●	●	●
	22ER7UN	22EL7UN	1/2″	-	7	22	1.6	2.3	4.76	●	●	●
	22ER6UN	22EL6UN	1/2″	-	6	22	1.6	2.3	4.76	●	●	●
	22ER5UN	22EL5UN	1/2″	-	5	22	1.7	2.5	4.76	●	●	●
	27ER4.5UN	27EL4.5UN	5/8″	-	4.5	27	1.9	2.7	6.35	○	○	○
	27ER4UN	27EL4UN	5/8″	-	4	27	2.1	3	6.35	○	○	○

UN通用螺纹刀片

UN-60° American UN Full Profile
UN-60°美制統一標準螺紋刀片

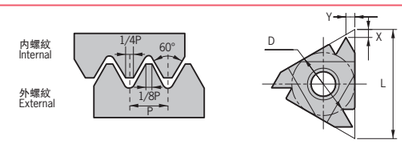

工件材料 Work Piece

P鋼	●	●	
M不銹鋼		●	
K鑄鐵		●	
N有色金屬			●
S耐熱合金			

刀片外形 Shape	型號 Specification 右旋螺紋 Right Hand	左旋螺紋 Left Hand	內接圓直徑D Dia	加工螺紋範圍 TPI mm	TPI	刀片尺寸 Size L	X	Y	T	硬質合金 Solid Carbide DP1120	DP2120	NA20
	06IR32UN	06IL32UN	5/32″	-	32	6	0.8	0.5	1.9	○	○	○
	06IR28UN	06IL28UN	5/32″	-	28	6	0.8	0.6	1.9	○	○	○
	06IR24UN	06IL24UN	5/32″	-	24	6	0.7	0.6	1.9	○	○	○
	06IR20UN	06IL20UN	5/32″	-	20	6	0.6	0.6	1.9	○	○	○
	06IR18UN	06IL18UN	5/32″	-	18	6	0.6	0.7	1.9	○	○	○
	08IR32UN	08IL32UN	3/16″	-	32	8	0.6	0.5	2.2	○	○	○
	08IR28UN	08IL28UN	3/16″	-	28	8	0.6	0.6	2.2	○	○	○
	08IR24UN	08IL24UN	3/16″	-	24	8	0.6	0.6	2.2	○	○	○
	08IR20UN	08IL20UN	3/16″	-	20	8	0.6	0.7	2.2	○	○	○
	08IR18UN	08IL18UN	3/16″	-	18	8	0.6	0.7	2.2	○	○	○
	08IR16UN	08IL16UN	3/16″	-	16	8	0.6	0.7	2.2	○	○	○
	08IR14UN	08IL14UN	3/16″	-	14	8	0.6	0.8	2.2	○	○	○
	11IR32UN	11IL32UN	1/4″	-	32	11	0.6	0.6	3.2	●	●	●
	11IR28UN	11IL28UN	1/4″	-	28	11	0.6	0.7	3.2	●	●	●
	11IR24UN	11IL24UN	1/4″	-	24	11	0.7	0.8	3.2	●	●	●
	11IR20UN	11IL20UN	1/4″	-	20	11	0.8	0.9	3.2	●	●	●
	11IR18UN	11IL18UN	1/4″	-	18	11	0.8	1	3.2	●	●	●
	11IR16UM	11IL16UM	1/4″	-	16	11	0.9	1.1	3.2	●	●	●
	16IR32UN	16IL32UN	3/8″	-	32	16	0.6	0.6	3.65	●	●	●
	16IR28UN	16IL28UN	3/8″	-	28	16	0.6	0.7	3.65	●	●	●
	16IR24UN	16IL24UN	3/8″	-	24	16	0.7	0.8	3.65	●	●	●
	16IR20UN	16IL20UN	3/8″	-	20	16	0.8	0.9	3.65	●	●	●
	16IR18UN	16IL18UN	3/8″	-	18	16	0.8	1	3.65	●	●	●
	16IR16UN	16IL16UN	3/8″	-	16	16	0.9	1.1	3.65	●	●	●
	16IR14UN	16IL14UN	3/8″	-	14	16	1	1.2	3.65	●	●	●
	16IR13UN	16IL13UN	3/8″	-	13	16	1.1	1.3	3.65	●	●	●
	16IR12UN	16IL12UN	3/8″	-	12	16	1.1	1.4	3.65	●	●	●
	16IR11UN	16IL11UN	3/8″	-	11	16	1.1	1.5	3.65	●	●	●
	16IR10UN	16IL10UN	3/8″	-	10	16	1.1	1.5	3.65	●	●	●
	16IR9UN	16IL9UN	3/8″	-	9	16	1.2	1.7	3.65	●	●	●
	16IR8UN	16IL8UN	3/8″	-	8	16	1.2	2	3.65	●	●	●
	22IR7UN	22IL7UN	1/2″	-	7	22	1.6	2.3	4.76	●	●	●
	22IR6UN	22IL6UN	1/2″	-	6	22	1.6	2.3	4.76	●	●	●
	22IR5UN	22IL5UN	1/2″	-	5	22	1.7	2.5	4.76	●	●	●
	27IR4.5UN	27IL4.5UN	5/8″	-	4.5	27	1.9	2.7	6.35	○	○	○
	27IR4UN	27IL4UN	5/8″	-	4	27	2.1	3	6.35	○	○	○

螺紋車刀片 Threading Insert
切槽車刀片 Grooving Insert
普通車刀片 Turning Inserts
銑刀片 Milling Inserts
鏜刀片 Boring Inserts
刀片 CARBIDE INSERTS

W-55°通用螺纹刀片

W-55° Whitworth Full Profile
W-55°英國惠氏螺紋刀片

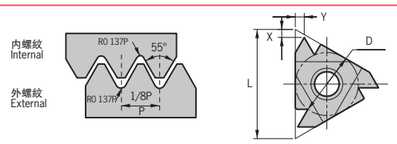

工件材料 Work Piece

P鋼	●	●	
M不銹鋼		●	
K鑄鐵		●	
N有色金屬			●
S耐熱合金			

刀片外形 Shape	型號 Specification 右旋螺紋 Right Hand	左旋螺紋 Left Hand	內接圓直徑D Dia	加工螺紋範圍 TPI mm	TPI	刀片尺寸 Size L	X	Y	T	硬質合金 Solid Carbide DP1120	DP2120	NA20
	11ER28W	11EL28W	1/4″	-	28	11	0.6	0.7	3.2	●	●	●
	11ER26W	11EL26W	1/4″	-	26	11	0.7	0.8	3.2	●	●	●
	11ER20W	11EL20W	1/4″	-	20	11	0.8	0.9	3.2	●	●	●
	11ER19W	11EL19W	1/4″	-	19	11	0.8	1	3.2	●	●	●
	11ER18W	11EL18W	1/4″	-	18	11	0.8	1	3.2	●	●	●
	11ER16W	11EL16W	1/4″	-	16	11	0.9	1.1	3.2	●	●	●
	11ER14W	11EL14W	1/4″	-	14	11	1	1.2	3.2	●	●	●
	16ER28W	16EL28W	3/8″	-	28	16	0.6	0.7	3.65	●	●	●
	16ER26W	16EL26W	3/8″	-	26	16	0.7	0.8	3.65	●	●	●
	16ER20W	16EL20W	3/8″	-	20	16	0.8	0.9	3.65	●	●	●
	16ER19W	16EL19W	3/8″	-	19	16	0.8	1	3.65	●	●	●
	16ER18W	16EL18W	3/8″	-	18	16	0.8	0.9	3.65	●	●	●
	16ER16W	16EL16W	3/8″	-	16	16	0.9	1.1	3.65	●	●	●
	16ER14W	16EL14W	3/8″	-	14	16	1	1.2	3.65	●	●	●
	16ER12W	16EL12W	3/8″	-	12	16	1.1	1.4	3.65	●	●	●
	16ER11W	16EL11W	3/8″	-	11	16	1.1	1.5	3.65	●	●	●
	16ER10W	16EL10W	3/8″	-	10	16	1.1	1.5	3.65	●	●	●
	16ER9W	16EL9W	3/8″	-	9	16	1.2	1.5	3.65	●	●	●
	16ER8W	16EL8W	3/8″	-	8	16	1.2	1.7	3.65	●	●	●
	22ER7W	22EL7W	1/2″	-	7	22	1.6	2.3	4.76	●	●	●
	22ER6W	22EL6W	1/2″	-	6	22	1.6	2.3	4.76	●	●	●
	22ER5W	22EL5W	1/2″	-	5	22	1.7	2.4	4.76	●	●	●
	27ER4.5W	27EL4.5W	5/8″	-	4.5	27	1.8	2.6	6.35	○	○	○
	27ER4W	27EL4W	5/8″	-	4	27	2	2.9	6.35	○	○	○



W-55°通用螺纹刀片

W-55° Whitworth Full Profile
W-55°英國惠氏螺紋刀片

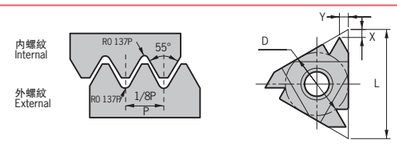

工件材料 Work Piece

P鋼	●	●	
M不銹鋼		●	
K鑄鐵		●	
N有色金屬			●
S耐熱合金			

刀片外形 Shape	型號 Specification 右旋螺紋 Right Hand	左旋螺紋 Left Hand	內接圓直徑D Dia	加工螺紋範圍 TPI mm	TPI	刀片尺寸 Size L	X	Y	T	硬質合金 Solid Carbide DP1120	DP2120	NA20
	06IR26W	06IL26W	5/32″	-	26	6	0.7	0.6	1.9	○	○	○
	06IR22W	06IL22W	5/32″	-	22	6	0.6	0.6	1.9	○	○	○
	06IR20W	06IL20W	5/32″	-	20	6	0.6	0.7	1.9	○	○	○
	06IR18W	06IL18W	5/32″	-	18	6	0.6	0.7	1.9	○	○	○
	08IR28W	08IL28W	3/16″	-	28	8	0.6	0.6	2.2	○	○	○
	08IR24W	08IL24W	3/16″	-	24	8	0.6	0.6	2.2	○	○	○
	08IR20W	08IL20W	3/16″	-	20	8	0.6	0.7	2.2	○	○	○
	08IR19W	08IL19W	3/16″	-	19	8	0.6	0.7	2.2	○	○	○
	08IR18W	08IL18W	3/16″	-	18	8	0.6	0.7	2.2	○	○	○
	08IR16W	08IL16W	3/16″	-	16	8	0.6	0.7	2.2	○	○	○
	11IR28W	11IL28W	1/4″	-	28	11	0.6	0.6	3.2	●	●	●
	11IR26W	11IL26W	1/4″	-	26	11	0.6	0.7	3.2	●	●	●
	11IR20W	11IL20W	1/4″	-	20	11	0.7	0.9	3.2	●	●	●
	11IR19W	11IL19W	1/4″	-	19	11	0.8	1	3.2	●	●	●
	11IR18W	11IL18W	1/4″	-	18	11	0.8	1	3.2	●	●	●
	11IR16W	11IL16W	1/4″	-	16	11	0.9	1.1	3.2	●	●	●
	11IR14W	11IL14W	1/4″	-	14	11	1	1.2	3.2	●	●	●
	16IR28W	16IL28W	3/8″	-	28	16	0.6	0.7	3.65	●	●	●
	16IR26W	16IL26W	3/8″	-	26	16	0.7	0.8	3.65	●	●	●
	16IR20W	16IL20W	3/8″	-	20	16	0.8	0.9	3.65	●	●	●
	16IR19W	16IL19W	3/8″	-	19	16	0.8	1	3.65	●	●	●
	16IR18W	16IL18W	3/8″	-	18	16	0.8	1	3.65	●	●	●
	16IR16W	16IL16W	3/8″	-	16	16	0.9	1.1	3.65	●	●	●
	16IR14W	16IL14W	3/8″	-	14	16	1	1.2	3.65	●	●	●
	16IR12W	16IL12W	3/8″	-	12	16	1.1	1.4	3.65	●	●	●
	16IR11W	16IL11W	3/8″	-	11	16	1.1	1.5	3.65	●	●	●
	16IR10W	16IL10W	3/8″	-	10	16	1.1	1.5	3.65	●	●	●
	16IR9W	16IL9W	3/8″	-	9	16	1.2	1.5	3.65	●	●	●
	16IR8W	16IL8W	3/8″	-	8	16	1.2	1.7	3.65	●	●	●
	22IR7W	22IL7W	1/2″	-	7	22	1.6	2.3	4.76	●	●	●
	22IR6W	22IL6W	1/2″	-	6	22	1.6	2.3	4.76	●	●	●
	22IR5W	22IL5W	1/2″	-	5	22	1.7	2.4	4.76	●	●	●
	27IR4.5W	27IL4.5W	5/8″	-	4.5	27	1.8	2.6	6.35	○	○	○
	27IR4W	27IL4W	5/8″	-	4	27	2	2.9	6.35	○	○	○



螺紋車刀片 Threading Insert
切槽車刀片 Grooving Insert
普通車刀片 Turning Inserts
銑刀片 Milling Inserts
鏜刀片 Boring Inserts
刀片 CARBIDE INSERTS

TR-30°通用螺纹刀片

TR-30° Inserts for Threads in Trapezoid Shape
TR-30°標準梯形螺紋刀片

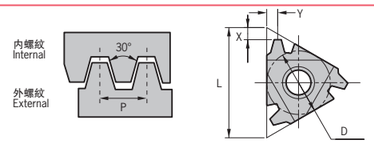

工件材料 Work Piece			
P鋼	●	●	
M不銹鋼		●	
K鑄鐵		●	
N有色金屬			●
S耐熱合金			

刀片外形 Shape	型號 Specification 右旋螺紋 Right Hand	左旋螺紋 Left Hand	內接圓直徑D Dia	加工螺紋範圍 TPI mm	TPI	刀片尺寸 Size L	X	Y	T	硬質合金 Solid Carbide DP1120	DP2120	NA20
	16ER1.50TR	16EL1.50TR	3/8″	1.5	-	16	1	1.1	3.65	●	●	●
	16ER2.00TR	16EL2.00TR	3/8″	2	-	16	1.1	1.3	3.65	●	●	●
	16ER3.00TR	16EL3.00TR	3/8″	3	-	16	1.3	1.5	3.65	●	●	●
	22ER4.00TR	22EL4.00TR	1/2″	4	-	22	1.7	1.9	4.76	●	●	●
	22ER5.00TR	22EL5.00TR	1/2″	5	-	22	2.1	2.5	4.76	●	●	●
	27ER6.00TR	27EL6.00TR	5/8″	6	-	27	2.2	2.6	6.35	○	○	○
	27ER7.00TR	27EL7.00TR	5/8″	7	-	27	2.3	2.7	6.35	○	○	○
	16IR1.50TR	16IL1.50TR	3/8″	1.5	-	16	1	1.1	3.65	●	●	●
	16IR2.00TR	16IL2.00TR	3/8″	2	-	16	1.1	1.3	3.65	●	●	●
	16IR3.00TR	16IL3.00TR	3/8″	3	-	16	1.3	1.5	3.65	●	●	●
	22IR4.00TR	22IL4.00TR	1/2″	4	-	22	1.7	1.9	4.76	●	●	●
	22IR5.00TR	22IL5.00TR	1/2″	5	-	22	2.1	2.5	4.76	●	●	●
	27IR6.00TR	27IL6.00TR	5/8″	6	-	27	2.2	2.6	6.35	○	○	○
	27IR7.00TR	27IL7.00TR	5/8″	7	-	27	2.3	2.7	6.35	○	○	○



Insert Screw
刀片螺釘

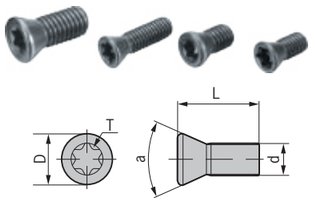

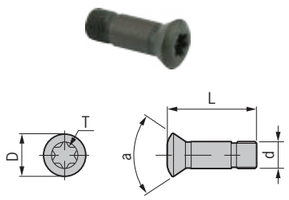

型號 Specification	D	d	L	a	扳手 Wrench
M020W040	2.7	2	4	55	Q06
M020W050	2.7	2	5	65	Q06
M022W050	3	2.2	5	60	Q08
M025W050	3.5	2.5	5	45	Q08
M025W060	3.5	2.5	6	55	Q08
M025W070	3.5	2.5	7	45	Q08
M030W070	4	3	7	55	Q08
M035W090	5	3.5	9	55	Q15
M040W090	5.5	4	9	55	Q15
M030Y060	4	3	6	50	Q08
M030Y070-1	4	3	7	50	Q08
M030Y070-2	4.5	3	7	55	Q10
M030D075	4.5	3	7.5	60	Q08
M030D095	4.5	3	9.5	60	Q08
M035R080-1	5.2	3.5	8	60	Q15
M035D080-2	5.2	3.5	8	60	Q15
M035T085	5.2	3.5	8.5	55	Q15
M040S080-1	5.7	4	8	60	Q15
M040R080-2	5	4	8	45	Q15
M040D080-3	5.7	4	8	55	Q15
M040R090	5	4	9	38	Q15
M040S100-1	5.7	4	10	60	Q15
M040R100-2	6	4	10	55	Q15
M040D110	5.5	4	11	55	Q15
M040S120	5.7	4	12	60	Q15
M045Y110	7	4.5	11	50	Q15
M050Y110-1	7	5	11	45	Q20
M050Y110-2	6.5	5	11	40	Q20
M050Y110-3	7	5	11	50	Q20
M050Y110-4	7.2	5	11	55	Q20
M050Y120-1	7.2	5	12	60	Q20
M050Y120-2	7.2	5	12	55	Q20
M050Y120-3	7.2	5	12	60	Q20
M030W070-4R	4.2	3	7	60	Q08
M040W090-5R	5.7	4	9	60	Q15
M050W090-6R	6.8	5	9	60	Q20
M050W130-8R	7.4	5	13	60	Q20
M050W170-10R	8	5	17	60	Q20
M060W210-12.5R	9.5	6	21	60	T30M
M080W250-15R	12	8	25	60	T30M

Locking Screw
內六角螺釘

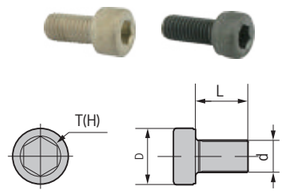

型號 Specification	D	d	L	扳手 Wrench
E030U080	5.5	3	8	L025
E040U100	7	4	10	L03
E040U160	7	4	16	L03
E040U200	7	4	20	L03
E050U100	8.5	5	10	L04
E050U120	8.5	5	12	L04
E050U160	8.5	5	16	L04
E050U200	8.5	5	20	L04
E050U300	8.5	5	30	L04
E050U350	8.5	5	35	L04
E050U450	8.5	5	45	L04
E050U650	8.5	5	65	L04
E050U800	8.5	5	80	L04
E050U1300	8.5	5	130	L04
E060U120	10	6	12	L05
E060U160	10	6	16	L05
E060U200	10	6	20	L05
E060U250	10	6	25	L05
E060U600	10	6	60	L05
E060U900	10	6	90	L05
E080U100	12.5	8	10	L06
E080U160	12.5	8	16	L06
E080U200	12.5	8	20	L06
E080U250	12.5	8	25	L06
E080U300	12.5	8	30	L06
E080U350	12.5	8	35	L06
E080U800	12.5	8	80	L06
E080U850	12.5	8	85	L06
E080U1200	12.5	8	120	L06
E100U160	15	10	16	L08
E100U200	15	10	20	L08
E100U250	15	10	25	L08
E100U300	15	10	30	L08
E100U350	15	10	35	L08
E100U1100	15	10	110	L08
E120U250	18	12	25	L10
E120U300	18	12	30	L10
E120U400	18	12	40	L10
E120U500	18	12	50	L10
E160U250	24	16	25	L12
E160U350	24	16	35	L12

Locking Screw
專用內六角螺釘

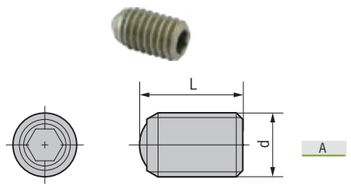

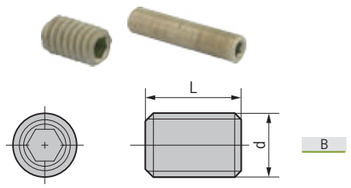

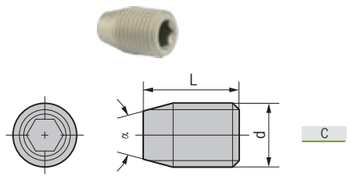

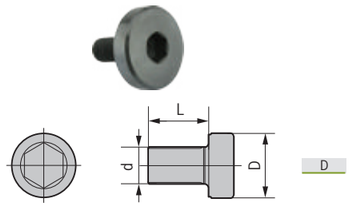

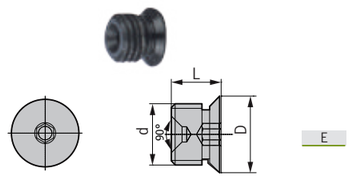

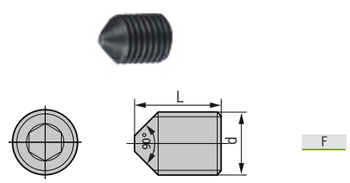

型號 Specification	專用 For	圖示 Figure	d	L	α	D	扳手 Wrench
M040U080-90-D	FBH	B	4	8	-	-	T02
M050U100-90-D	FBH	B	5	10	-	-	T025
M050U160-90-D	FBH	B	5	16	-	-	T025
M100U160-90-D	FBH	B	10	16	-	-	T05
M100U200-90-D	FBH	B	10	20	-	-	T05
M100U250-90-D	FBH	B	10	25	-	-	T05
M050Z090P-LH	ABH	B	5	9	-	-	T025
M060Z125P-LH	ABH	B	6	12.5	-	-	T03
M060Z160P-LH	ABH	B	6	16	-	-	T03
M080Z205P-LH	ABH	B	8	20.5	-	-	T04
M080Z250P-LH	ABH	B	8	25	-	-	T04
M080Z350P-LH	ABH	B	8	35	-	-	T04
M050Z050-30P	DCK刀柄	C	5	5	30	-	L025
M050Z060-30P	DCK刀柄	C	5	6	30	-	L025
M060Z090-30P	DCK刀柄	C	6	9	30	-	L03
M080Z120-30P	DCK刀柄	C	8	12	30	-	L04
M100Z160-30P	DCK刀柄	C	10	16	30	-	L05
M120Z200-30P	DCK刀柄	C	12	20	30	-	L06
M040Z048Q	CBH	A	4	4.8	-	-	L02
M040Z060Q	CBH	A	4	6	-	-	L02
M050Z080Q	CBH	A	5	8	-	-	L025
M060Z100Q	CBH	A	6	10	-	-	L03
M080Z145Q	CBH	A	8	14.5	-	-	L04
M100Z160Q	CBH	A	10	16	-	-	L05
M100Z110Q	CBH	A	10	11	-	-	L05
M180Z130P	SLN	B	18	13	-	-	L10
M180Z160P	SLN	B	18	16	-	-	L10
M180Z180P	SLN	B	18	18	-	-	L10
M200Z180P	SLN	B	20	18	-	-	L10
M200Z200P	SLN	B	20	20	-	-	L10
E100Z300-MTB	MTB	D	10	30	-	-	L05
E160Z400-MTB	MTB	D	16	40	-	-	L08
E160Z350-40	FMA/B	D	16	35	-	40	L17
E160Z500-40	FMA/B	D	16	50	-	40	L17
E160Z350-50	FMA/B	D	16	35	-	50	L17
E160Z500-50	FMA/B	D	16	50	-	50	L17
E240Z500-65	FMA/B	D	24	50	-	65	L17
M060Z050P-N	ABS25	E	6	5	-	8	T02
M080Z065P-N	ABS32	E	8	6.5	-	10	T025
M100Z080P-N	ABS40	E	10	8	-	12.5	T03
M120Z085P-N	ABS50	E	12	8.5	-	15	T04
M160Z120P-N	ABS63	E	16	12	-	20	T05
M200Z138P-N	ABS80	E	20	13.8	-	24.5	T06
M240Z185P-N	ABS100	E	24	18.5	-	29.5	T08
M300Z230P-N	ABS125	E	30	23	-	38.5	T10
M060Z085P-W	ABS25	F	6	8.5	-	-	T03
M080Z110P-W	ABS32	F	8	11	-	-	T04
M100Z140P-W	ABS40	F	10	14	-	-	T05
M120Z165P-W	ABS50	F	12	16.5	-	-	T06
M160Z205P-W	ABS63	F	16	20.5	-	-	T08
M200Z260P-W	ABS80	F	20	26	-	-	T10
M240Z275P-W	ABS100	F	24	27.5	-	-	T12
M300Z370P-W	ABS125	F	30	37	-	-	T14

Locking Screw
緊定螺釘

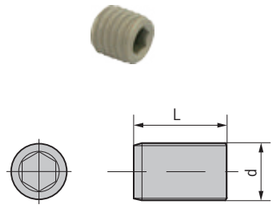

型號 Specification	d	L	扳手 Wrench
M060U080	6	8	L03
M080U080	8	8	L04
M080U100	8	10	L04
M100U100	10	10	L05
M100U120	10	12	L05
M120U140	12	14	L06
M120U160	12	16	L06
M120U200	12	20	L06
M140U160	14	16	L06
M140U200	14	20	L06
M160U160	16	16	L08
M160U250	16	25	L08
M030U060-D	3	6	T015
M040U040-D	4	4	T02
M040U050-D	4	5	T02
M040U060-D	4	6	T02
M040U080-D	4	8	T02
M040U100-D	4	10	T02
M040U120-D	4	12	T02
M040U160-D	4	16	T02
M040U200-D	4	20	T02
M050U060-D	5	6	T025
M050U080-D	5	8	T025
M050U200-D	5	20	T025
M050U300-D	5	30	T025
M060U060-D	6	6	T03
M060U080-D	6	8	T03
M060U100-D	6	10	T03
M060U120-D	6	12	T03
M060U160-D	6	16	T03
M060U200-D	6	20	T03
M060U400-D	6	40	T03
M060U500-D	6	50	T03
M080U100-D	8	10	T04
M080U120-D	8	12	T04
M080U160-D	8	16	T04
M080U200-D	8	20	T04
M080U300-D	8	30	T04
M100U120-D	10	12	T05
M100U140-D	10	14	T05
M100U160-D	10	16	T05
M100U200-D	10	20	T05
M100U250-D	10	25	T05
M120U120-D	12	12	T06
M120U140-D	12	14	T06
M120U200-D	12	20	T06
M120U250-D	12	25	T06
M120U300-D	12	30	T06

Coolant Pipe
填充管

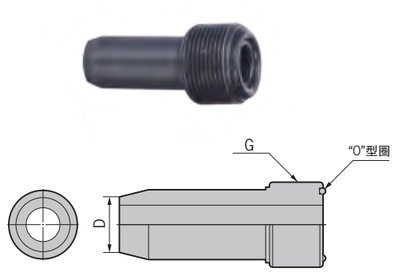

型號 Specification		D	G	扳手 Wrech
HSK	**40-CPA**	8	M12X1.0P	WCPA40
	50-CPA	10	M16X1.0P	WCPA50
	63-CPA	12	M18X1.0P	WCPA63
	100-CPA	16	M24X1.5P	WCPA100

For DC Slim Collet Chuck
止動螺母

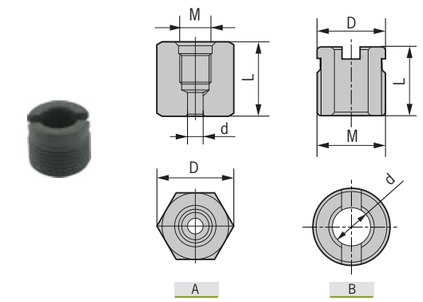

型號 Specifcation	圖示 Figure	對應刀具 For	D	d	L	M
ZD4-1	A	DC	20.5	4	19	M8X1-LH
ZD4-2	B	DC	8	3.8	10.5	M8X0.75-LH
ZD6-1	B	DC	10	5	13	M10X1-LH
ZD6-2	A	DC	20	5.2	20	M12X1.5-LH
ZD8-1	B	DC	12	6.3	12	M12X1-LH
ZD10-1	B	DC	14	8.2	12	M14X1-LH
ZD10-2	B	DC	16	8.5	13	M16X1.5-LH
ZD12-1	B	DC	17	10.3	13	M16X1.5-LH

For Face Mill Arbor
鍵銷

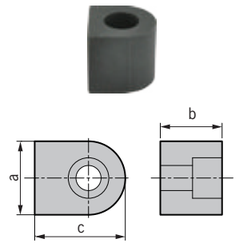

型號 Specification	對應刀具 For	a	b	c
A254-1-9.5*9.5*10.5	FMA	9.5	9.5	10.5
A254-2-9.5*9.5*18	FMA FMA-BG	9.5	9.5	18
A317-1-12.7*12.7*12.5	FMA FMA-BG	12.7	12.7	12.5
A317-2-12.7*12.7*16.5	FMA	12.7	12.7	16.5
A317-3-12.7*12.7*21.7	FMA	12.7	12.7	21.7
A317-4-12.7*12.7*31.5	FMA FMA-BG	12.7	12.7	31.5
A381-1-15.87*15.87*18.5	FMA	15.87	15.87	18.5
A400-3-26*25*25.4	FMA	26	25	25.4
A508-1-19.05*16.55*19.55	FMA	19.05	16.55	19.55
B220-1-10*10*10.5	HSK-A-FMB FMB	10	10	10.5
B220-2-10*10*18.3	FMB FMB-BG	10	10	18.3
B270-1-12*12*14.5	FMB	12	12	14.5
B270-2-12*12*20.8	HSK-A-FMB FMB	12	12	20.8
B320-1-14*14*21.5	FMB	14	14	21.5
B400-1-16*16*17.5	FMB	16	16	17.5
B400-2-16*16*19.5	FMB	16	16	19.5
B600-1-25.4*25*25.4	HSK-A-FMB FMB	25.4	25	25.4

Washer For Face Mill Arbor
墊圈

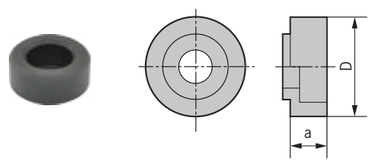

型號 Specification	對應刀具 For	a	D
FM-1	FMB	16	33
FM-2	FMA FMB	20.5	40
FM-3	FMA FMB	20.5	50

For FBH Tools
過度螺母

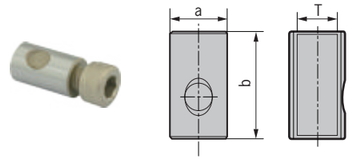

型號 Specification	對應刀具 For	a	b	T
BM6	FBH	6	11	M5
BM7	FBH	8	13	M5
BM8	FBH	16	19	M10

Washer For ABH/DBH Boring Tool
墊片

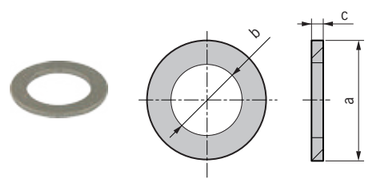

型號 Specification	對應刀具 For	a	b	c
7.2*4.3*0.5	ABH	7.2	4.3	0.5
8.5*4.3*0.5	ABH	8.5	4.3	0.5
10.3*6.5*0.5	ABH	10.3	6.5	0.5
13.2*8.5*0.8	ABH	13.2	8.5	0.8
8.8*5.3*1.5	DBH	8.8	5.3	1.5
10.3*6.5*1.5	DBH	10.3	6.5	1.5
13.2*8.5*1.5	DBH	13.2	8.5	1.5
16.5*10.5*1.8	DBH	16.5	10.5	1.8
19.5*12.5*2	DBH	19.5	12.5	5.2

Shim
墊片

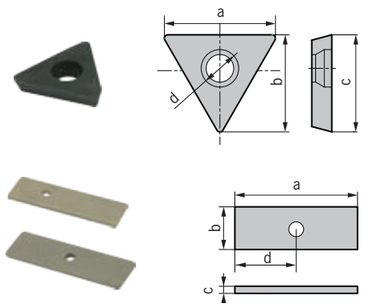

型號 Specification	對應刀具 For	a	b	c	d
MT2204	TP90	17	15	-	4.5
DP-1	BST-DBH	50	15	3.5	2.5
DP-2	BST-CBH	50	15	3.5	1.5

Insert Seat / Clamp
刀片座/壓板

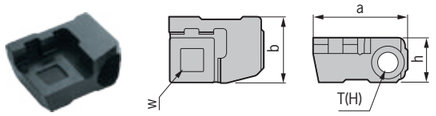

型號 Specification	a	b	h	w	T(H)
FC3050-TP2204-90	30	19	12	TPG2204	4
FC2550-SE1203-45	25	18	12	SEG1203	4
FC2550-SE1504-45	25	18	12	SEG1504	4
FC2550-SP1203-75	25	18	12	SPG1203	4
FC2550-SP1504-75	25	18	12	SPG1504	4

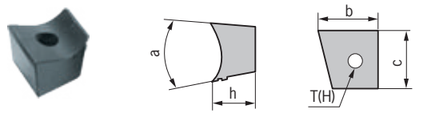

型號 Specification	b	c	h	a	T(H)
SV-128170-15-45	17	12.8	17.5	15°	6
SV-128170-15-75	17	12.8	19.5	15°	8
SV-128170-15-90	18.8	13.8	13	15°	6

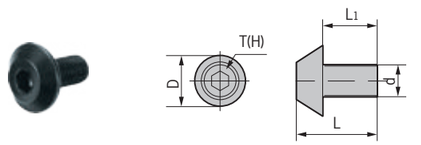

型號 Specification	d	D	L_1	L	T(H)
M050H080-TP	5	12	8	12	L03D
M060H080-TP	6	13.5	8	12	L04D
M060H120-TP	6	13.5	12	16.5	L04D
M080H120-TP	8	18	12	16.5	L05D
M080H160-TP	8	18	16	21	L05D

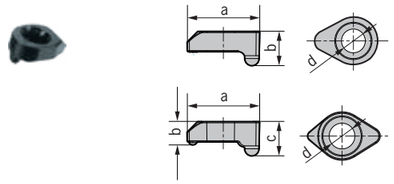

型號 Specification	a	b	c	d
YD-13	13	6	-	35
YD-14	14	6	-	4
YD-16	16	6	-	5
YS-34	10	3.4	3.8	3
YS-39	10.4	3.9	4.7	4
YS-43	12.2	4.3	6	4
YS-52	13.5	5.2	5.7	5

Wrench For DYD Boring Tool
扳手

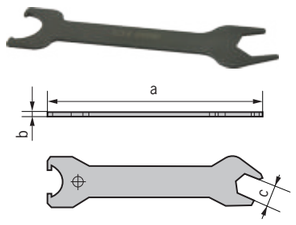

型號 Specification	對應刀具 For	a	b	c
DCK1-DYD19	DYD	84	1.5	8
DCK1-DYD22	DYD	84	1.5	8
DCK2-DYD29	DYD	110	1.5	10
DCK3-DYD38	DYD	118	2	17
DCK4-DYD48	DYD	118	2	17
DCK5-DYD62	DYD	148	2.5	22
DCK6-DYD82	DYD	150	2.5	22
DCK6-DYD105	DYD	160	2.5	30
DCK6-DYD135	DYD	160	2.5	30

Wrench - Flag
旗形星形扳手



型號 Specification	d	L	T
Q06	2.5	84	6
Q08	3	86	8
Q10	3	90	10
Q15	5	94	15
Q20	5	94	20

Wrench - T
T形扳手

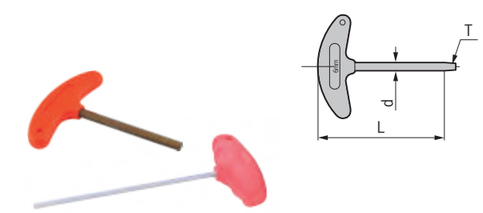

型號 Specification	d	L	T
T02	2	58	2
T025	2.5	66	2.5
T03	3	72	3
T04	4	76	4
T05	5	92	5
T06	6	102	6
T03-L	3	110	3
T04-L	4	120	4
T05-L	5	150	5
T06-L	6	170	6
T08-L	8	190	8
T30M	6	120	30

Wrench - Star
直柄星形扳手

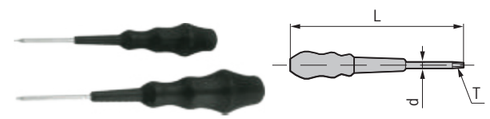

型號 Specification	d	L	T
T6-Z	2.5	92	6
T8-Z	3	94	8
T10-Z	3	98	10
T15-Z	5	102	15
T20-Z	5	102	20

Allen Key
L形扳手

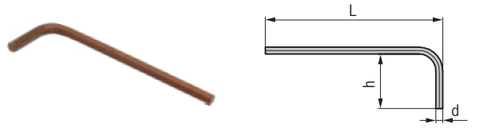

型號 Specification	d	L	h
L02	2	52	12
L025	2.5	60	15
L03	3	65	20
L04	4	70	25
L05	5	78	28
L06	6	85	32

Shim For Turning Tool Holder
車刀刀墊

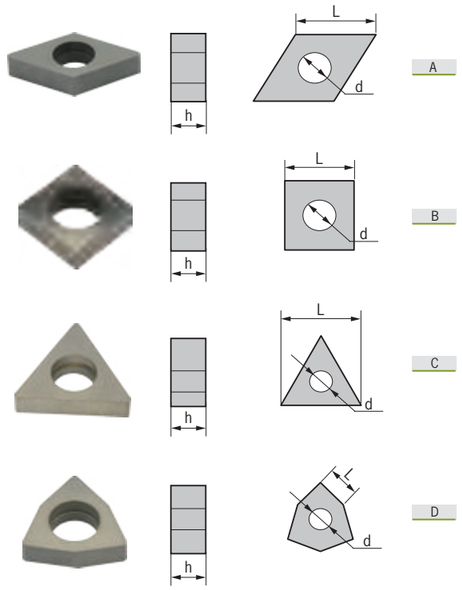

A

型號 Specification	圖示 Figure	d	h	L
MD1103	A	6	3	11
MD1504	A	6	4	15
MD1506	A	6	6	15
MC1204	A	8	4	12
MC1604	A	8	4	16
MC1904	A	8	4	19
MV1603	A	8	3	16

B

型號 Specification	圖示 Figure	d	h	L
MS1204	B	6	4	12
MS1504	B	10	4	15
MS1904	B	11	4	19

C

型號 Specification	圖示 Figure	d	h	L
MT1603	C	6	3	16
MT2204	C	8	4	22

D

型號 Specification	圖示 Figure	d	h	L
MW0603	D	6	3	6
MW0804	D	6	4	8

E

型號 Specification	圖示 Figure	d	h	L
YE(I)16	E	4.3	3.18	16.45
YE22(R)	E	5.2	3.97	21.65
YI22(L)	E	5.2	3.97	21.65
YE27(R)	E	6.1	5.5	27
YI27(L)	E	6.1	5.5	27

Clamp For Turning Tool Holder
車刀壓板

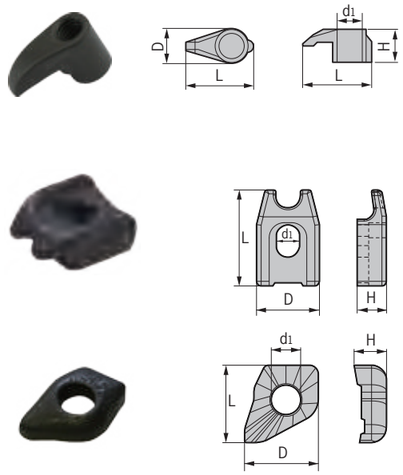

型號 Specification	D	d1	L	H
MY0515	7.8	5	14.7	10.6
MY0515-A	7.8	5	14.7	9.6
MY0619	8.6	6	18.15	7.7
MY0621	9.5	6	21.5	13.2
MY0819	11	8	19.1	14.2
MY0823	11	8	22.5	15.8
MY0826	11	8	25.5	16.8

型號 Specification	D	d1	L	H
WYT16	16	6	18.05	6.5
WYW08	17	8	19.66	7.2

型號 Specification	D	d1	L	H
GYR/L	14.5	6.5	18	7.2

Clamp Screw For Turning Tool Holder
車刀壓板螺釘

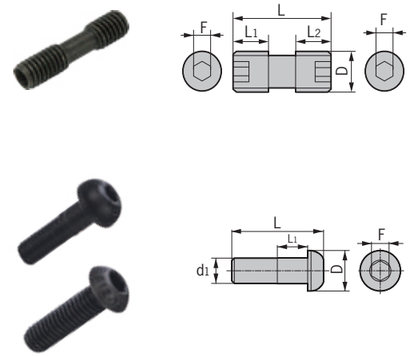

型號 Specification	D	L1	L2	L	H
ML0516	M5*0.8	8	5	16	2.5
ML0520	M5*0.8	7	6	20	2.5
ML0620	M6*1.0	7	7	20	3
ML0625	M6*1.0	8.3	8.3	25	3
ML0828	M8*1.0	12	10	24.7	4

型號 Specification	D	L1	L2	L	H
WL0625	11	6.8	M6*1.0	25	3
WL0825	12.5	7	M8*1.25	28	4

型號 Specification	D	L1	L2	L	H
B0620	10	20	M6*1.0	24	4

Center Screw Turning Tool Holder
車刀中心螺釘

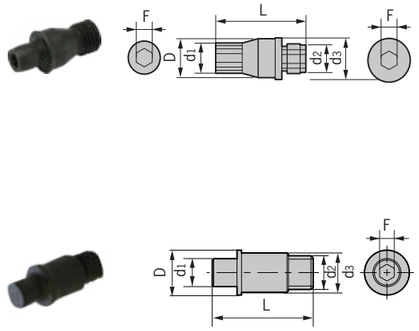

型號 Specification	d3	d1	d2	D	L	F
MX0510	4	3.65	M5*0.8	5.6	10.1	2
MX0513	5.46	3.65	M5*0.8	6.2	12.88	2
MX0611	5.15	5	M6*1.0	6.86	11.2	2.5
MX0613	7.07	5	M6*1.0	7.83	15.5	2.5
MX0617	7.17	5	M6*1.0	7.76	17.2	2.5
MX0619	7.1	5	M6*1.0	7.8	18.4	2.5
MX0822	9.45	6.17	M8*1.0	10.2	21.8	3
MX1022	11	7.95	M10*1	11.95	22.1	4

型號 Specification	d3	d1	d2	D	L	F
WX0515	6.2	3.6	M5*0.8	5.5	15.5	2.5
WX0618	7.8	5	M6*1.0	7.2	18	3
WX0822	10.2	6.2	M8*1.0	9.5	22	4

C Ring For W-type Turning Tool Holders
C形環

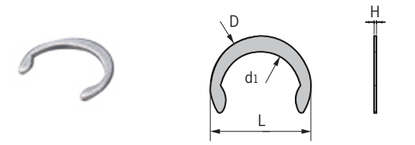

型號 Specification	D	d1	L	H
C6	8	6.5	8	0.5
C8	10	8.5	10	0.5

Spring For GTBR Grooving Tools
彈簧

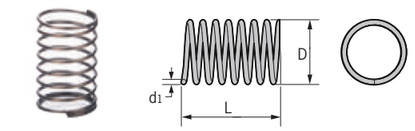

型號 Specification	D	d1	L
SP-0612	7.7	12	0.6

Clamp Screws For Turning Tool Holder
車刀刀片螺釘

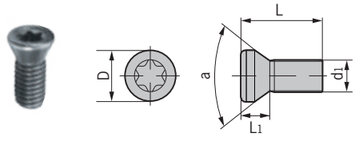

型號 Specification	D	L	L1	d1	a
M2*4	2.7	3.7	1.2	M2*0.4	60°
M2*5	2.7	4.7	1.2	M2*0.4	60°
M2.2*5	3.2	5	1.7	M2.2*0.45	60°
M2.2*6	3.4	6	1.7	M2.2*0.45	60°
M2.2*7	3.4	7	1.7	M2.2*0.45	60°
M2.5*5	3.7	5	2	M2.5*0.45	44°
M2.5*6	3.7	6	2	M2.5*0.45	44°
M2.5*7	3.7	7	2	M2.5*0.45	44°
M2.5*9	3.7	9	2	M2.5*0.45	44°
M3*6	4.1	6	2	M3*0.5	60°
M3*7	4.1	7	2	M3*0.5	60°
M3.5*7	5.5	7	3	M3.5*0.6	60°
M3.5*8	5.5	8	3	M3.5*0.6	60°
M3.5*9	5.5	9	3	M3.5*0.6	60°
M3.5*12	5.5	12	3	M3.5*0.6	60°
M4*9	5.6	9	2.5	M4*0.7	60°
M4*14	5.7	14.2	3	M4*0.7	60°
M4*15	5.7	15	3	M4*0.7	60°
M5*10	6.3	10	2.8	M5*0.8	44°
M5*12	6.3	12	2.8	M5*0.8	44°
M5*16	6.3	16	2.8	M5*0.8	44°
M5*18	6.3	18	2.8	M5*0.8	44°

Clamping Screw For Threading Holders
側螺釘

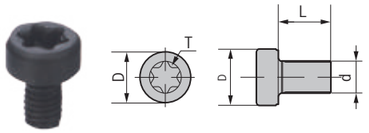

型號 Specification	D	L	L1	d1
SA3007	5.5	7	2.6	M3*0.5

Clamping Screw For Grooving Holders
槽刀螺釘

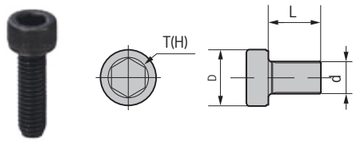

型號 Specification	D	L	L1	d1
GS030100	5.5	10	3	M3*0.5
GS050120	8.5	12	5	M5*0.8
GS050160	8.5	16	5	M5*0.8
GS060160	10	16	6	M6*1.0
GS060200	10	20	6	M6*1.0
GS060250	10	25	6	M6*1.0

Z-Axial Zero-Setter
Z–量表式Z軸設定器



型號 Specification	形式 Type	總高度 Chief height	伸縮距離 Flex distance
EDS-50	量表式	50	3

特 點 / Feature

■將平行規置于標準面。轉動百分表，使長針歸零。將平行規移開。
■將Z軸設定器置于工件上，刀具接觸操作面，慢速進刀到秒針指在“0”，則刀具與工件的距離是50mm。
■Have the central measuring porfion of the zero setter presetter against a plain surface and aligned if with the outer reference surface. Turn the dial gauge for zero setting.
■Have the cutter touched against the Z zero setter.Once the indicator position at zero the distance between the tool tip to workpiece is 50mm.

Z-Axial Zero Setter（Magentic）
Z–量表式Z軸設定器附磁性



型號 Specification	形式 Type	總高度 Chief height	伸縮距離 Flex distance
ZDI-100	量表式	100	3

3D Master
三軸（3D）設定器



型號 Specification	柄部直徑 Shank diameter	針頭直徑 Needle diameter
3D-D	20	4

Mechanical Edge Sensor
機械式尋邊器



型號 Specification
ME-1020
ME-420

使用說明 / Instruction

■Φ10 直柄安裝在夾頭上，以手指輕推測定子，使其偏心約0.5mm。
■以400-600/min 的速度轉動，使測定子于加工物端面相接觸，一點點地碰觸移動，使測定子不再振動，宛如静止狀態。
■再以微動進給碰觸，測定子就會朝一個方向滑移，這個滑移起點就是所需尋求的基準位置。
■加工物本身的端面位置就是加上測定子半徑的座標位置。
■不適合在卧式設備上使用。
■Φ10 straight shank head installed in the folder to light that the stator fingers to eccentricity of about 0.5mm.
■The speed of rotation to 400-600/min, so that determination of sub-structures in the processing side face contact, to touch a little bit of movement, so that child is no longer measured vibration, like a static state.
■And then feed in touch fretting determined child would slip in one direction, the slip is a necessary starting point to find the location of the base.
■Processing of the end itself, the location of objects is determined with the coordinates of the location of sub-radius.
■Not suitable for use in cross-type device.

Electronic Edge Sensor
光電式尋邊器



型號 Specification	柄部直徑 Shank diameter	總長度 Total length	測頭 Probe
PM20	20	147	10
PM32	32	147	10

特 點 / Feature

■電池：1.2V
■紅燈指示
■Battery voltage: 1.2V
■With red LED light

Spindle Cleaner
清潔棒



型號 Specification
STC30
STC40
STC50
STC40-HSK
STC50-HSK
STC63-HSK
STC100-HSK

Tool Lock (Fixed)
立卧式鎖刀座



型號 Specification	型號 Specification	型號 Specification
TL-HSK50	TL-SK30	TL-BT30
TL-HSK63	TL-SK40	TL-BT40
TL-HSK100	TL-SK50	TL-BT50

Tool Lock (Multi-direction)
萬向式鎖刀座



型號 Specification
TLW-BT30
TLW-BT40
TLW-BT50

Trolley For Tool Holder
刀庫車



型號 Specification	裝刀數 Amount
TTH-30	36
TTH-40	35
TTH-50	25

Tooling Sheath
刀柄座



型號 Specification
TS-30
TS-40
TS-50

立銑刀故障分析

故障	原因	措施
刀具破損	有關于被加工材料時	■ 減少進給量 ■ 減少突出量 ■ 最大限度的減少切削刀刃總的長部
	正常作業時	■ 減少進給量 ■ 初期更換刀具(調整磨損量) ■ 更換夾頭與套筒 ■ 減少突出量 ■ 研磨刀刃使用刃數少的立銑刀(4刃→2刃)
	變更進給方向時	■ 改變進給方向之前減少進經給量 ■ 更換夾頭和套筒
切削刀刃破損	Cornet部損壞	■ 使用手用絲錐畫面切角 ■ 將逆銑變更爲順銑
	切削深度的末端部位破損	■ 將逆銑變更爲順銑 ■ 降低切削速度
	刃口損壞	■ 向刃口增加珩磨量 ■ 降低切削速度 ■ 如果作業過程中發出了"嘩"聲,請增加進給量
	嚴重的缺口現象	■ 降低進給速度 ■ 使用刃數少的立端銑刀 ■ 向刃口增加珩磨量 ■ (solid endmill的情況下) 將趕幹式作業變更爲濕式作業 ■ (brazed endmill的情況下) 將趕濕式作業變更爲吹氣的幹式作業 ■ 保持合理的切削速度
發生突發性地磨損現象		■ 發生突發性地磨損現象 ■ 降低進給速度 ■ 將逆銑變更爲順銑 ■ 增加進給速度
加工面的粗糙度不良	表面粗糙時	■ 降低進給速度 ■ 使用刃數多的立端銑刀((2刃→4刃)
	形成積屑刃口	■ 增加切削速度 ■ 采用濕式切削方式 ■ 向刃口增加微細的珩磨量 ■ 將逆銑變更爲順銑
	加工面上形成橫向條紋	■ 向刃口增加微細的珩磨量 ■ 使用不溶性切削油 ■ 將逆銑變更爲順銑
發生振動		■ 增加進給量 ■ 變更切削速度 ■ 減少突出量 ■ 粗削作業時采用雙刃立銑刀 ■ 正常作業時采用4刃立端銑刀,將逆銑變更爲順銑

平面銑削故障分析

損傷類型		工具材料及材質的選擇	工具形狀的選擇	切削條件的選擇	相關被加工材料
磨損	機械性磨損	選擇屬于同一個系列,且耐磨損性高的材料	增加刃後角,增加副切削角,增加刃口半徑減少珩磨量	降低切削速度,調爲便理的進給速度,使用適宜的切削油	硬質材料
	熱磨損	選擇屬于同一個系列,且耐磨損性高的材料	適當地調整刃後角,副切削角,刃口半徑	降低切削速度,減少切削量使用適宜的切削油(可以使用切削油)	硬質材料
	溶着擴散磨損	選擇屬于同一個系列,且耐磨損性高的材料	增加傾斜角	降低切削速度,減少切削量使用適宜的切削油	鋼系材料
	壓縮物分離磨損	選擇屬于同一個系列,且耐磨損性高的材料	傾斜角選擇最適合的材質的角度增加副切削角,減少珩磨量	降低切削速度,減少切削量使用適宜的切削油	N系耐熱合金Co系耐熱合金不銹鋼高强力鋼
	化學性磨損	使用陶瓷, 金屬陶瓷材料	適當地增加刃後角	降低切削速度,減少進給量,使用幹式或含少極壓添加劑的切削油	一般材料
	熱龜裂	使用高韌性材料	采用刃口部位角度及刃口半徑的熱發生較少的形狀	降低切削速度,減少進給量,使用幹式切削方式	鋼系材料
	燒成變形	采用抗壓能力强的材料	增加刃後角,傾斜角,刃口半徑,減少主切削角,珩磨量	降低切削速度,進給幅度以及切削量,采用滄桑却效果好的切削油	硬質ROLL
	缺口	使用高韌性材料	減少刃口部位角,增加刃口半徑增加珩磨量	選擇適宜的切削速度,減少進給量	一般材料
	發黑	采用磨損性好的的材料	減少傾斜角,增加錐角,增加珩磨量	減少進給量,減少切削量,使用切削油(可以使用的切削油)	一般材料,硬質材料
缺損	機械性重復引起的衝撞缺損	使用高韌性材料	減少刃口部位角,增加刃口半徑增加珩磨量	選擇適宜的切削速度,減少進給量,選擇適宜的切削量	一般材料
	熱衝撞缺損	使用高韌性材料	采用刃口部位角度及刃口半徑的熱發生較少的形狀,減少珩磨量	降低切削速度,減少進給量,減少切削量,采用幹式切削方式	一般材料
	熱缺損	使用耐磨性好的材料	采用刃口部位角度及刃口半徑的熱發生較少的形狀,減少珩磨量	降低切削速度,減少進給量,減少切削量,使用適宜的切削油	一般材料,硬質材料
	壓榨分離缺損	使用高韌性材料	減少傾斜角,增加刃口半徑,增加珩磨量	提高切削速度,增加進給量,使用潤滑性能高的切削油	N系耐熱合金Co系耐熱合金不銹鋼高强力鋼
	燒成變形缺損	使用耐磨性好的材料,金屬陶瓷材料不適合	調整爲適宜的刃後角,傾斜角,減少主切削角,減少刃口半徑,減少珩磨量	降低切削速度,減少進給量,使用適宜的切削油,對陶瓷材料不使用	一般材料,硬質材料
	切削刃的粗糙度引起的缺損	使用高韌性材料	謹慎進行刀具研磨,降低磨石的顆粒度,注意刃口的研磨方向	降低切削速度,減少進給量,減少切削量	一般材料
	研磨變形及銅焊接變化引起的缺損	使用高韌性材料,不行使用陶瓷,金屬陶瓷材料	考慮絲錐的柄部的厚度比謹慎進行研磨操作,銅焊接時緩緩退火	降低切削速度,減少進給量,減少切削量	一般材料

切斷/Parting-off Tool

1.當刀片接近工件中心，應降低切削速度30%，有利于提高刀片壽命和表面質量。
2.在允許的情況下，盡可能選用懸伸小的刀柄，以保證良好的穩定性。

1.When the insert was close to the workpiece, should reduce 30% of cutting speed to improve the insert lifetime and surface quality.
2.In Prem,if allowed,in order to keep stability,please choose the holder as short as we can.

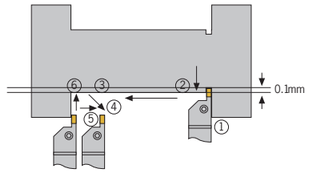

外圓切槽和車削,仿形車削
External grooving turning,and profiling

走刀順序：切削深度＞0.5mm時，徑向進刀（最大切深可0.75*刀片刃寬S）→徑向退刀0.1mm左右→軸向走刀→斜向退刀→軸向走刀→徑向加工到所需深度。
切削底經或倒角（精加工）時，采用如圖所示操作順序，可減小刀具與切屑的摩擦而引起的小振動。

The sequence of feed: during depth of cut ＞0.5mm, radial direction feeding(deepest depth of cut can reach 0.75*insert blade width S)→radial direction retract around 0.1mm→axial direction feeding→slant direction retract axial direction feeding→radial direction processing till to reach the required depth.
During cutting or chamfering (finish machining), operate as the sequence shown in this figure will reduce the small vibration generated from the cutting tools and the friction during cutting.

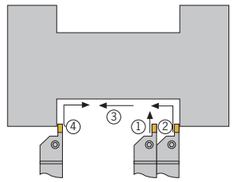

端面切槽和車削
Face Grooving and Turning

■粗加工（多槽切削）Rough machining(multiple-grooved cutting)
從最大直徑向內切削，退刀時，刀片稍向內邊緣偏移。如圖示（1）
During retract after cutting from the biggest diameter to inner, shift the insert to the inner edge a little. As shown in figure(1)

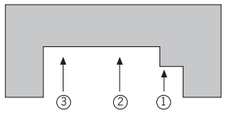

圖示（1）
Figure1

■凹槽車削/Recessing
軸向車削深度不超過0.75*S（刀片刃寬）
槽寬大于槽深，建議使用凹槽車削，如圖示（2）
槽深大于槽寬，建議使用采用多槽切削。

Axial direction turning depth not exceeding 0.75*S (insert blade width);
when groove width is bigger than groove depth, it is suggested to use recessing tool, as shown in figure(2);
when groove depth is bigger than groove width, it is suggested to use multiple-grooving turning.

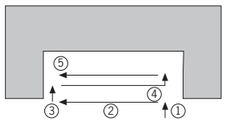

圖示（2）
Figure2

■精加工/Finishing
先精加工底部和外徑邊緣，再將內徑精加工到所需尺寸。如圖示（3）
First to finish machine the bottom and outer diameter edge, and then finish machine the inner diameter to the required dimensions.As shown in figure(3)

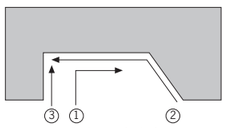

圖示（3）
Figure3

內孔切槽車削/Internal Grooving and Turning

■采用圖示的加工順序/Internal grooving tools
便于切削流出，總是從遠離孔端面的方向開始向外進給。
Using the processing sequence as shown in this figure
For better cutting outflow, always feed outward from the direction that far from the hole end face.

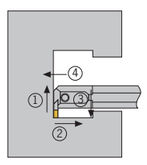

車削刀杆技術資料/Technical Guide of Turning tools

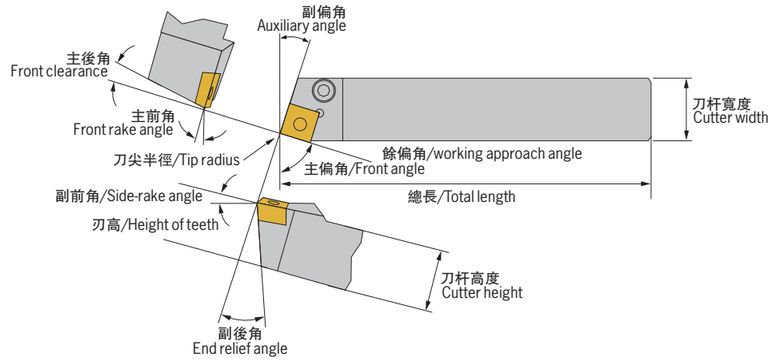

常用切削公式/Common Formulas of Cutting

■切削速度/Cutting Speed

$$V = \frac{\pi \cdot D \cdot N}{1000} \quad (m/min)$$

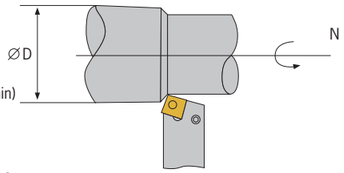

V: 切削速度(m/min)
D: 工作直徑(mm)
N: 轉數（rpm）
π: 圓周率（3.14）

■進給/Feed

$$f = \frac{F}{N} \quad (m/min)$$

f: 每轉進給（m/rev）
F: 每分鐘進給（m/min）
N: 轉數（rpm）

■表面粗糙度/Surface Roughness

理論表面粗糙度/Theory surface roughness

$$Rmax = \frac{f^2}{8r} 1000 \ (\mu)$$

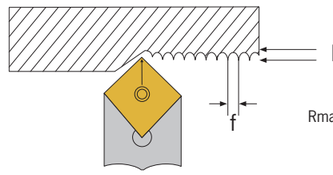

Rmax: 最大粗糙度（μ）
f: 每轉進給（mm/rev）
r: 刀尖半徑

■刀尖半徑和進給對粗糙的影響
Effects on Roughness from Cutting Feed and Nose Radius

刀尖半徑/Insert Radius 進給量/Cutting Feed	0.4	0.8	1.2
0.15	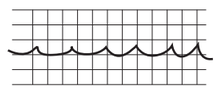	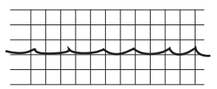	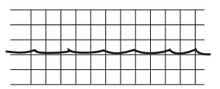
0.26	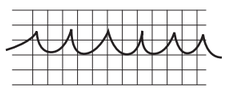	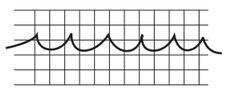	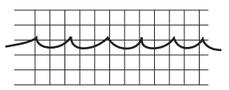
0.46	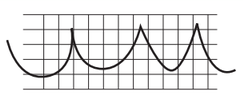	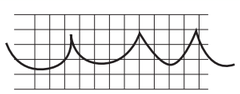	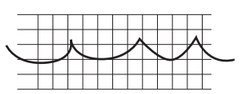

R P M T 10 T3 MO S

1 2 3 4 5 6 7 8

1 刀片形狀 Shape

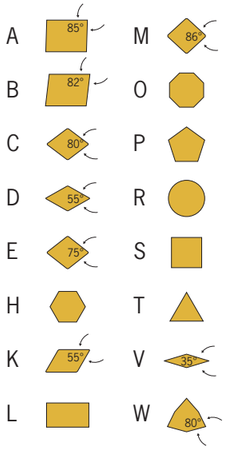

2 後角 Clearance Angle

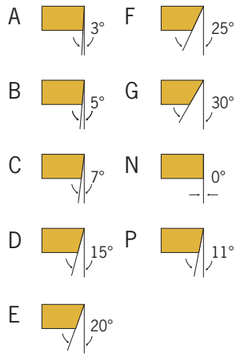

3 公差 Tolerance (mm)

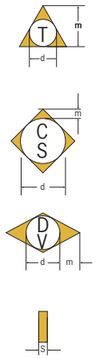

	d	m	s
A	±0.025	±0.005	±0.025
C	±0.025	±0.013	±0.025
E	±0.025	±0.025	±0.025
F	±0.013	±0.005	±0.025
G	±0.025	±0.025	±0.130
H	±0.013	±0.013	±0.025
J[1]	±0.05-0.15[2]	±0.005	±0.025
K[1]	±0.05-0.15[2]	±0.013	±0.025
L[1]	±0.05-0.15[2]	±0.025	±0.025
M	±0.05-0.15[2]	±0.08-0.20[2]	±0.130
N	±0.05-0.15[2]	±0.05-0.20[2]	±0.025
U	±0.08-0.25[2]	±0.13-0.38[2]	±0.130

4 切削及加緊特徵 Holding Type

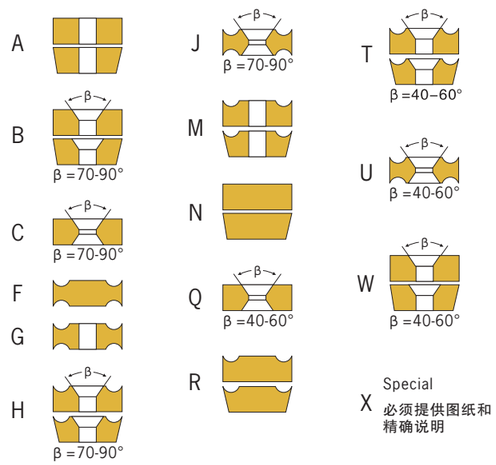

5 刀刃長度 Cutting Edge Length

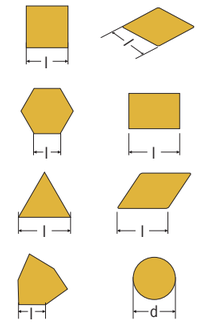

6 刀片厚度 Thickness

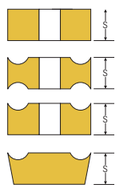

01 s=1.59
T1 s=1.98
02 s=2.38
T2 s=2.78
03 s=3.18
T3 s=3.97
04 s=4.76
05 s=5.56
06 s=6.35
07 s=7.94
09 s=9.52

7 刀尖圓角 Radius



01 r=0.1
02 r=0.2
04 r=0.4
08 r=0.8
12 r=1.2
16 r=1.6
24 r=2.4

8 切削刃形狀 Shape Of Cutting Edge

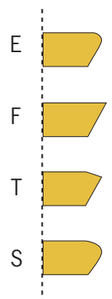

T N M G 22 04 08 -DM

1 2 3 4 5 6 7 8

1 刀片形狀 Shape

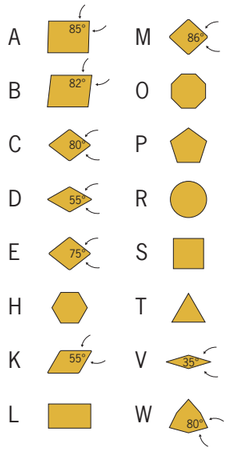

2 後角 Clearance Angle

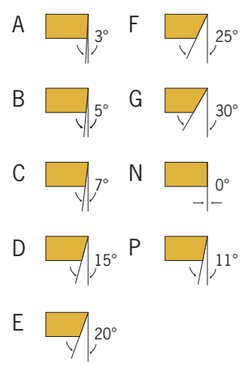

3 公差 Tolerance (mm)

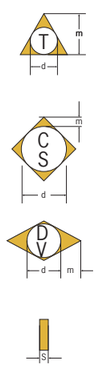

	d	m	s
A	±0.025	±0.005	±0.025
C	±0.025	±0.013	±0.025
E	±0.025	±0.025	±0.025
F	±0.013	±0.005	±0.025
G	±0.025	±0.025	±0.130
H	±0.013	±0.013	±0.025
J[1]	±0.05-0.15[2]	±0.005	±0.025
K[1]	±0.05-0.15[2]	±0.013	±0.025
L[1]	±0.05-0.15[2]	±0.025	±0.025
M	±0.05-0.15[2]	±0.08-0.20[2]	±0.130
N	±0.05-0.15[2]	±0.05-0.20[2]	±0.025
U	±0.08-0.25[2]	±0.13-0.38[2]	±0.130

4 切削及加緊特徵 Holding Type

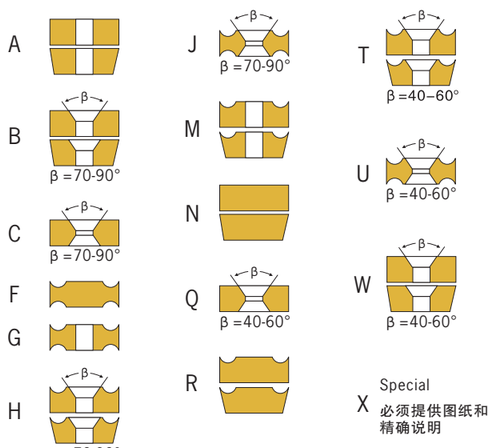

5 刀刃長度 Cutting Edge Length

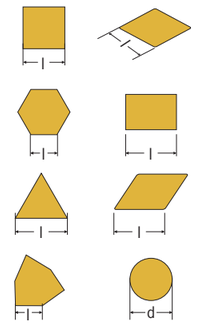

6 刀片厚度 Thickness

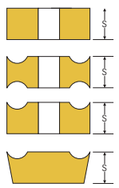

01 s=1.59
T1 s=1.98
02 s=2.38
T2 s=2.78
03 s=3.18
T3 s=3.97
04 s=4.76
05 s=5.56
06 s=6.35
07 s=7.94
09 s=9.52

7 刀尖圓角 Radius



01 r=0.1
02 r=0.2
04 r=0.4
08 r=0.8
12 r=1.2
16 r=1.6
24 r=2.4

8 斷屑槽 Chip Breakere

DF	ER
DM	SF
DR	PM
HF	HR
HM	*
HR	*
EF	*
EM	*

Inserts Codes System - Threading
螺紋車刀片牌號說明

1 刀片尺寸 Size

L (mm)	D
06	5/32″
08	3/16″
11	1/4″
16	3/8″
22	1/2″
27	5/8″

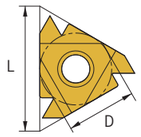

2 刀片形式 Shape



標準型
Standard



U型
U Style



立裝型
V Style

3 刀片類型 Type

E 外螺紋
External

I 內螺紋
Internal

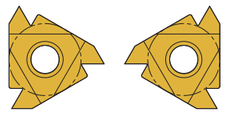

E　　I

4 螺紋旋向 Direction

R 右旋螺紋
Right Hand Insert

L 左旋螺紋
Left Hand Insert

1		2	3	4	5	6	7	8
16		E	R		1.5	ISO		
16	X	E	R		1.5	ISO		
22		N	R		1.5	ISO	3	M
27	V	N	R		3.0	ISO		
27	U	E			8.0	TR		

5 螺距 Pitch

完全形
Full Profile

螺距 mm	牙距 TPI
0.5-6	48-4

局部面截頂形
Partial Profile

	mm	TPI
A	0.5-1.5	48-16
AG	0.5-3.0	48-8
G	1.75-3.0	14-8
N	3.5-5.0	7-5
Q	5.5-6.0	4.5-4
V	6.0-10	4-2.5

6 螺紋標準 Thread Profile

60° —— 60°通用型螺紋 Partial profile 60°
55° —— 55°通用型螺紋 Partial profile 55°
ISO —— ISO標準型螺紋 ISO Metric
UN —— 60°美制統一標準型螺紋 UN
UNJ —— 60°美制航空航天螺紋 UNJ
W —— 55°英國惠氏螺紋 Whitworth
NPT —— 60°美國標準錐管螺紋 NPT
NPTF —— 60°美制幹密封螺紋 NPTF
BSPT —— 55°英制標準錐管螺紋 BSPT
ACME —— 美制29°梯形螺紋 ACME
STACME — 美制29°短齒梯形螺紋 Stub ACME
TR —— 30°標準梯形螺紋 Trapez DIN 103
ABUT —— 美制鋸齒形螺紋 American Buttress
BBUT —— 英制鋸齒形螺 British Buttress
RD —— 消防食品機械圓螺紋 Round DIN 405
RD20400 - 消防食品機械圓螺紋 Round DIN 20400
APIRD —— API圓螺紋 API Round
BUT —— API偏梯和螺紋 BUT Casing
Pg —— PG

7 齒數（梳齒型M） Multitooth

2　3　5　6　8

8 梳齒刀片形式 Shape

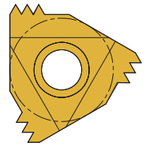

M

Internal Turning Tools-Code System
內孔車刀型號說明示範

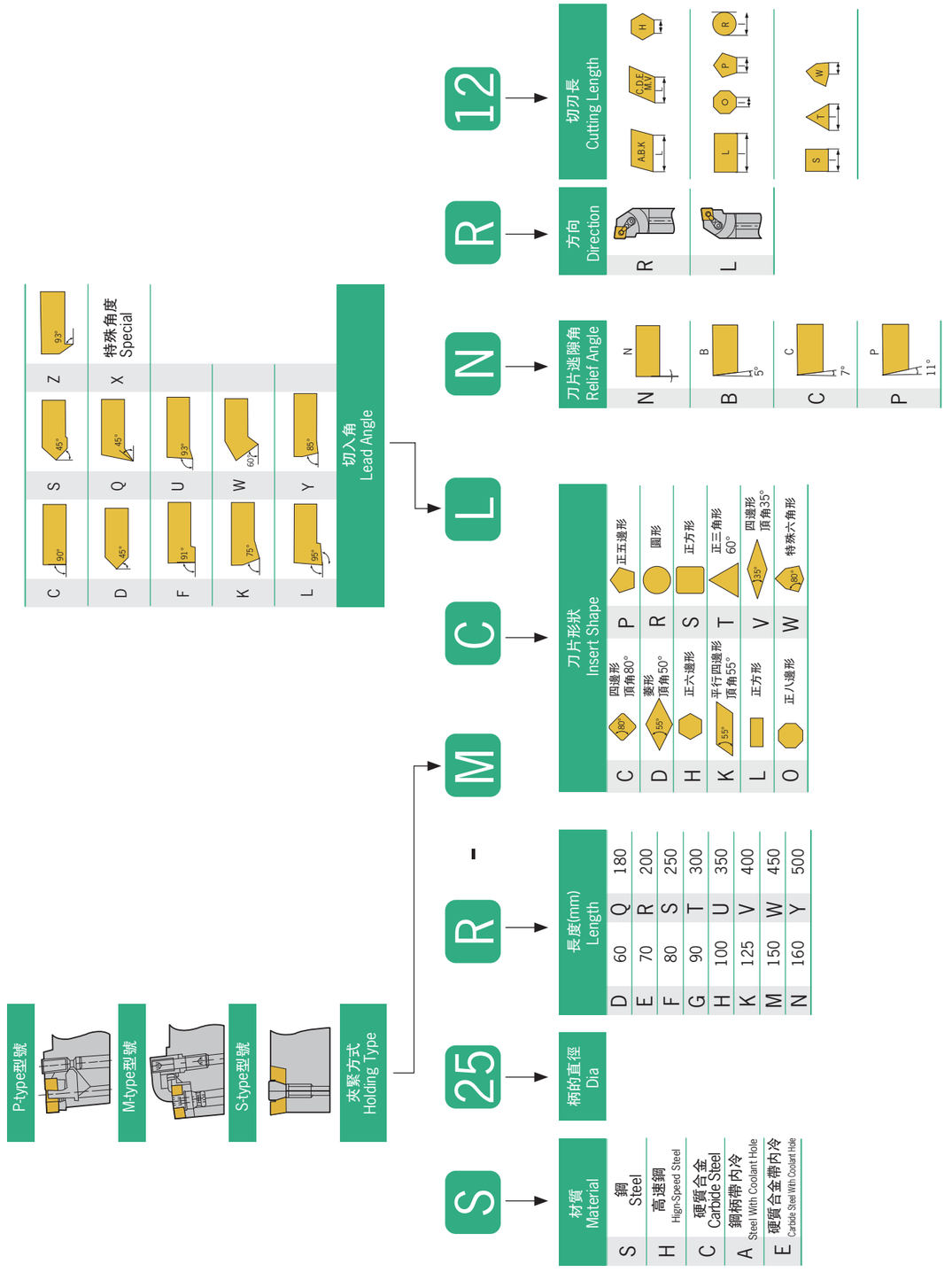

External Turning Tools – Codes System
外圓車刀型號說明示範

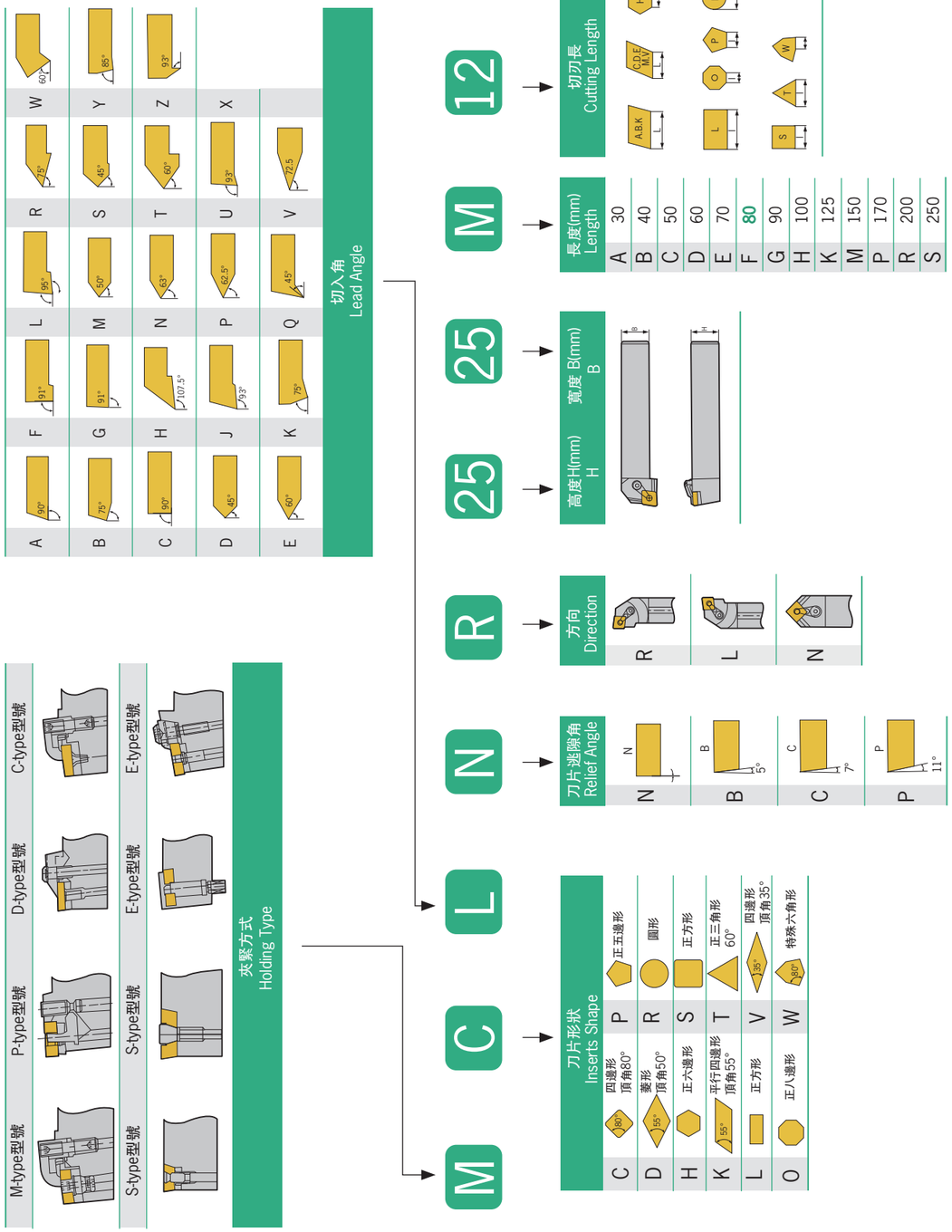

Threading Tools - Codes System
螺紋刀型號說明示範

S	E	R	2020	K	16	
鎖緊方式 Holding Type	刀杆類型 Cutter Type	切削方向 Direction	刀柄尺寸 Size	長度mm Length	刀片尺寸 Size	
S螺絲 Screw-on	I內徑 Interal	R右手	外徑刀杆刀方 External 2020=20X20 內徑刀杆直徑 Internal 0020=直徑dia20	F 80	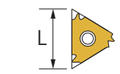	B 帶冷却液孔 With coolant hole
C壓板 Clamp-on	E外徑 External	L左手		H 100		C 硬質合金 Solid carbide
				K 125		V 立式 Verlical
				M 150		D 頭部下降刀杆
				N 160		G 横向刀杆
				P 170		U U型刀杆
				Q 180		
				R 200		
				S 250		
				T 300		
				U 350		
				V 400		

Carbide End Mill - Codes System
整體硬質合金立銑刀型號説明示範

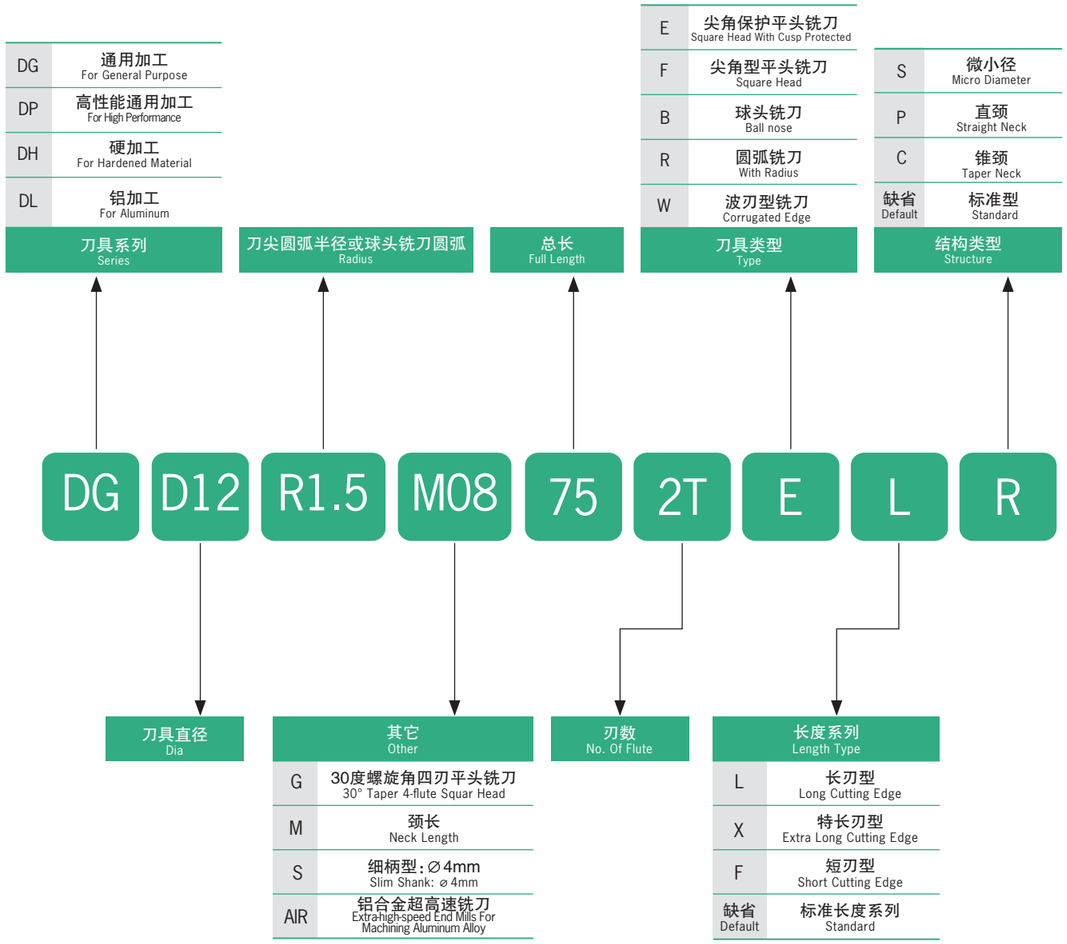

Cutting Speed / Power
切削速度和動力

切削速度

$$V = \frac{3.14 \times D \times N}{1000} \text{ (m/min)}$$

進給

$$F = F_Z \times Z \times N \text{ (mm/min)}$$

$$F_Z = \frac{F}{Z\ N} \text{ (mm/tooch)}$$

V:切削速度(m/min)　D:銑刀直徑(mm)
N:轉速(r.p.m)　F:工作臺進給(mm/min)
Fz:每刃進給量(mm/tooth)　Z:刃數

所需動力

$$W = \frac{Q \times Ks}{60 \times 102 \times \eta} \text{ (Km)}$$

$$Hp = \frac{W}{0.75} \text{ (Km)}$$

$$Q = \frac{L \times F \times d}{1000} \text{ (Km)} = \frac{d \times f \times V \times L \times z}{3.14 \times D}$$

W:所需動力　HP:所需馬力
Q:排出量　L:切削速度
F:工作臺進給(mm/min)　d:切削深度(mm)
Ks:非切削阻擱　η:機械效率

Surface Roughness Formula
表面粗糙度的理論值Rmax的計算公式

$$Rmax = \frac{fn^2}{8r} \times 1000, \mu m$$

Rmax：殘留面積高度, μ m
Vertical deviations of the roughness from the mean line

r：刀尖半徑Insert Radius (mm)

fn：每轉進給Feed Rate (mm/rev)

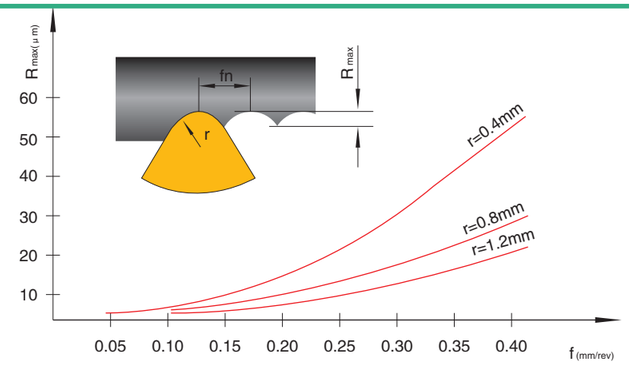

Table of Surface Roughness, Insert Radius & Feed Rate
表面粗糙度與刀尖半徑，進給量的關系表

Rt	Ra	ISO1302	刀尖半徑及進給量（mm/rev) Insert Radius (r) / Feed Rate (mm/rev)			
			r=0.4	r=0.8	r=1.2	r=1.6
▽Rt100	12.5-25	25 ▽	-	0.51	0.69	0.88
▽Rt63	6.3-25	12.5 ▽	0.27	0.43	0.56	0.68
▽Rt40	4.9-6.3	6.3 ▽	0.25	0.37	0.49	0.57
▽Rt31.5	4.0-4.9		0.22	0.32	0.41	0.47
▽Rt25	2.5-4.0	3.2 ▽	0.20	0.28	0.36	0.39
▽Rt16	1.6-2.5		0.15	0.22	0.29	0.31
▽Rt10	1.0-1.6	1.6 ▽	0.10	0.13	0.18	0.20

Cutting Table For Taps (Straight Shank)
轉速表與絲錐標準切削參數（帶直槽絲錐）

D螺紋加工	加工材料 Work Piece							
	低碳鋼（C≦0.20%）	中碳鋼（0.25～C）鉻鉬鋼（41xx鋼）球墨鑄鐵（FCD）	高碳鋼（0.45%≦C）合金工具鋼（SKD)鋼（Cu）	硬化鋼（HRC25～45）	不銹鋼（SUS）	鑄鋼（SC）	灰鑄鐵（FC）黃銅/黃銅鑄件（C2xxx-CAC2xx）鋁合金壓鑄件（ADC）	鋁壓材（Al)塑料（酚醛樹脂、聚氯乙烯）
	標準切削速度 Cutting Speed							
	8～13m/min	7～12m/min	6～9m/min	3～5m/min	4～7m/min	6～11m/min	10～15m/min	10～20m/min
M 2	1270～2070	1110～1910	960～1430	480～800	640～1110	960～1750	1590～2390	1590～3180
M 2.2	1160～1880	1010～1740	870～1300	430～720	580～1010	870～1590	1450～2170	1450～2890
M 2.3	1110～1800	970～1660	830～1250	420～670	550～970	830～1520	1380～2080	1380～2770
M 2.5	1020～1660	890～1530	760～1150	380～640	510～890	760～1400	1270～1910	1270～2550
M 2.6	980～1590	860～1470	740～1100	370～610	490～860	740～1350	1220～1840	1220～3560
M 3	850～1380	740～1270	640～960	320～530	420～740	640～1170	1060～1590	1060～2120
M 3.5	730～1180	640～1090	550～820	270～460	360～640	550～1000	910～1360	910～1820
M 4	640～1040	560～960	480～720	240～400	320～560	480～880	800～1190	800～1590
M 4.5	570～920	500～850	420～640	210～350	280～500	420～780	710～1060	710～1420
M 5	510～830	450～760	380～570	190～320	260～450	380～700	640～960	640～1270
M 5.5	460～750	410～690	350～520	170～290	230～410	350～640	580～870	580～1160
M 6	420～390	370～640	320～480	160～270	210～370	320～580	530～800	530～1060
M 7	360～590	320～550	270～410	140～230	180～320	270～500	460～680	460～910
M 8	320～520	280～480	240～360	120～200	160～280	240～440	400～600	400～800
M 9	280～460	250～420	210～320	110～180	140～250	210～390	350～530	350～710
M 10	260～410	230～380	190～290	95～160	130～220	190～350	320～480	320～640
M 11	230～380	200～350	170～260	87～150	120～200	170～320	290～430	290～580
M 12	210～350	190～320	160～240	80～130	110～190	160～290	270～400	270～530
M 14	180～300	160～270	140～210	68～110	91～160	140～250	230～340	230～460
M 15	170～280	150～260	130～190	64～110	85～150	130～230	210～320	210～420
M 16	160～260	140～240	120～180	60～99	80～140	120～220	200～300	200～400
M 18	140～230	120～210	110～160	53～98	71～120	110～200	180～270	180～350
M 20	130～210	110～190	95～140	48～80	64～110	95～180	160～240	160～320
M 22	120～190	110～170	87～130	43～72	58～100	87～160	150～220	150～290
M 24	110～170	93～160	80～120	40～66	53～93	80～150	130～200	130～270
M 25	100～170	89～150	76～120	38～64	51～89	76～140	130～190	130～260
M 26	98～160	86～150	73～110	37～61	49～86	73～140	120～180	120～250
M 27	94～150	83～140	71～110	35～59	47～93	71～130	120～180	120～240
M 28	91～150	80～140	68～100	34～57	45～80	68～130	110～170	110～230
M 30	85～140	74～130	64～95	32～53	42～74	64～120	110～160	110～210
M 32	80～130	70～120	60～90	60～50	40～70	60～110	99～150	99～200

Cutting Table For Taps (Straight Shank)
轉速表與絲錐標準切削參數（帶直槽絲錐）

D螺紋加工	加工材料							
	低碳鋼（C≦0.20%）	中碳鋼（0.25～C）鉻鉬鋼（41xx鋼）球墨鑄鐵（FCD）	高碳鋼（0.45%≦C）合金工具鋼（SKD)鋼（Cu）	硬化鋼（HRC25～45）	不銹鋼（SUS）	鑄鋼（SC）	灰鑄鐵（FC）黃銅/黃銅鑄件（C2xxx-CAC2xx）鋁合金壓鑄件（ADC）	鋁壓材（Al)塑料（酚醛樹脂、聚氯乙烯）
	標準切削速度							
	8～13m/min	7～12m/min	6～9m/min	3～5m/min	4～7m/min	6～11m/min	10～15m/min	10～20m/min
M 33	77～130	68～120	58～87	29～48	39～68	58～110	96～150	96～190
M 35	73～120	64～110	55～82	27～45	36～64	55～100	91～140	91～180
M 36	71～120	61～110	53～80	27～44	35～62	53～98	88～130	88～180
M 38	67～110	59～100	50～75	25～42	34～59	50～92	84～130	84～170
M 39	65～110	57～98	49～73	24～41	33～57	49～90	82～120	82～160
M 40	64～100	56～95	48～72	24～40	32～56	48～88	80～120	80～160
M 42	61～99	53～91	45～68	23～38	30～53	45～83	76～110	76～150
M 45	57～92	50～85	42～64	21～35	28～50	42～78	71～110	71～140
M 48	53～86	46～80	40～60	20～33	27～46	40～73	66～99	66～130
M 50	51～83	45～76	38～57	19～32	25～45	38～70	64～95	64～130
M 52	50～80	43～73	37～55	18～31	24～43	37～67	61～92	61～120
M 55	46～75	41～69	35～52	17～29	23～41	35～64	58～87	58～120
M 56	45～74	40～68	34～51	17～28	23～40	34～63	57～85	57～110
M 58	44～71	38～66	33～50	16～27	22～38	33～60	55～82	55～110
M 60	42～69	37～64	32～48	16～27	21～37	32～58	53～80	53～110
M 62	41～67	36～62	31～46	15～26	21～36	31～56	51～77	51～100
M 64	40～65	35～60	30～45	15～25	20～35	30～55	50～75	50～99
M 65	39～64	34～59	29～44	15～24	20～34	30～54	50～73	50～98
M 68	37～61	33～56	28～42	14～23	19～33	28～51	47～70	47～94
M 70	36～59	32～55	27～41	14～23	18～32	27～50	45～68	45～91
M 72	35～57	31～53	27～40	13～22	18～31	27～49	44～66	44～88
M 75	34～55	30～51	25～38	13～21	17～30	25～47	42～64	42～85
M 76	34～54	29～50	25～38	13～21	17～29	25～46	42～63	42～84
M 78	33～53	29～49	24～37	12～20	16～29	24～45	41～61	41～82
M 80	32～52	28～48	24～36	12～20	16～28	24～44	40～60	40～80
M 82	31～50	27～47	23～35	12～19	16～27	23～42	39～58	39～78
M 85	30～49	26～45	22～34	11～19	15～26	22～41	37～56	37～75
M 90	28～46	25～42	21～32	11～18	14～25	21～39	35～53	35～71
M 95	27～44	23～40	20～30	10～17	13～23	20～37	34～50	34～67
M 100	25～41	22～38	19～29	10～16	13～22	19～35	32～48	32～64

Cutting Conditions - Boring
鏜刀切削條件

被加工材料 Work Piece	鏜孔直徑 Dia	精加工 Finishing			粗加工作 Roughing		
		綫速度 V(m/min)	進給 (mm/rev)	切削深度 (mm)	綫速度 V(m/min)	進給 (mm/rev)	切削深度 (mm)
碳鋼Carbon Steel (S45C,S50C)	25-33	110-140	0.05-0.15	0.05-0.30	100-130	0.15-0.25	4.2
	32-42	115-150	0.05-0.15	0.05-0.30	105-140	0.15-0.30	5.7
	40-55	115-150	0.05-0.15	0.06-0.35	105-150	0.15-0.30	5.7
	52-70	115-150	0.15-0.2	0.06-0.35	105-150	0.25-0.35	6.3
	120-164	115-150	0.15-0.2	0.07-0.50	105-150	0.30-0.40	6.3
	160-204	115-150	0.15-0.2	0.07-0.50	105-150	0.30-0.40	6.3
合金鋼Alloy Steel (SCM,SNCM)	25-33	100-130	0.05-0.15	0.05-0.30	90-120	0.15-0.25	4.2
	32-42	110-140	0.05-0.15	0.05-0.30	100-130	0.15-0.30	5.7
	40-55	110-150	0.05-0.15	0.06-0.35	100-130	0.20-0.30	5.7
	52-70	110-150	0.15-0.2	0.06-0.35	100-130	0.25-0.35	6.3
	120-164	110-150	0.15-0.2	0.07-0.50	100-130	0.30-0.40	6.3
	160-204	110-150	0.15-0.2	0.07-0.50	100-130	0.30-0.40	6.3
不銹鋼Stainless Steel (SUS)	25-33	70-100	0.07-0.15	0.12-0.35	60-90	0.12-0.20	4.2
	32-42	80-110	0.07-0.15	0.12-0.35	70-100	0.15-0.25	5.7
	40-55	80-110	0.07-0.15	0.20-0.50	70-100	0.15-0.25	5.7
	52-70	80-110	0.1-0.20	0.20-0.50	70-100	0.20-0.30	6.3
	120-164	80-110	0.1-0.20	0.25-0.75	70-100	0.25-0.35	6.3
	160-204	80-110	0.1-0.20	0.25-0.75	70-100	0.25-0.35	6.3
鑄鋼Cast Iron (FC)	25-33	70-100	0.07-0.15	0.12-0.35	60-110	0.20-0.30	4.2
	32-42	80-110	0.07-0.15	0.12-0.35	60-110	0.25-0.35	5.7
	40-55	80-110	0.07-0.15	0.20-0.50	60-110	0.25-0.35	5.7
	52-70	80-110	0.12-0.2	0.20-0.50	60-110	0.30-0.40	6.3
	120-164	80-110	0.12-0.2	0.25-0.75	60-110	0.30-0.45	6.3
	160-204	80-110	0.12-0.2	0.25-0.75	60-110	0.30-0.45	6.3
鋁合金鋼Aluminium Alloy (AC)	25-33	150-300	0.05-0.15	0.12-0.35	120-300	0.20-0.30	4.2
	32-42	150-360	0.10-0.20	0.12-0.35	150-370	0.25-0.35	5.7
	40-55	150-360	0.10-0.20	0.20-0.50	150-370	0.25-0.35	5.7
	52-70	150-360	0.10-0.20	0.20-0.50	150-370	0.30-0.40	6.3
	120-164	150-360	0.10-0.25	0.25-0.75	150-370	0.30-0.45	6.3
	160-204	150-360	0.10-0.25	0.25-0.75	150-370	0.30-0.45	6.3
特殊鋼Special Steel (SKD61)	25-33	30-40	0.07-0.15	0.12-0.35	25-35	0.12-0.20	4.2
	32-42	40-45	0.07-0.15	0.12-0.35	30-40	0.15-0.25	5.7
	40-55	40-45	0.07-0.15	0.20-0.50	30-40	0.15-0.25	5.7
	52-70	40-45	0.10-0.2	0.20-0.50	30-40	0.20-0.30	6.3
	120-164	40-45	0.10-0.2	0.25-0.75	30-40	0.25-0.35	6.3
	160-204	40-45	0.10-0.2	0.25-0.75	30-40	0.25-0.35	6.3

Cutting Parameters - U-drills
快速鑽頭切削數據參考

快鑽直徑 Diameter	材質 Material	轉速 RPM	3D切削速度 3XD Feeding	4D切削速度 4XD Feeding
15-17	一般鋼 Carbon Steel	2700-2400	Lathe f0.06-0.08 Machine F160-220	Lathe f0.05-0.07 Machine F130-160
18-20		2300-2100	Lathe f0.09-0.11 Machine F200-230	Lathe f0.07-0.09 Machine F160-190
21-23		2000-1900	Lathe f0.1-0.12 Machine F200-220	Lathe f0.09-0.11 Machine F180-200
24-26		1800-1700	Lathe f0.1-0.13 Machine F180-220	Lathe f0.1-0.12 Machine F180-210
27-29		1600-1500	Lathe f0.1-0.13 Machine F160-200	Lathe f0.1-0.12 Machine F160-180
30-32		1500-1400	Lathe f0.1-0.13 Machine F150-180	Lathe f0.1-0.12 Machine F140-170
33-35		1400-1300	Lathe f0.1-0.13 Machine F140-170	Lathe f0.1-0.12 Machine F130-160
36-38		1200-1100	Lathe f0.1-0.13 Machine F130-150	Lathe f0.1-0.12 Machine F120-150
39-41		1100-1000	Lathe f0.1-0.13 Machine F110-140	Lathe f0.1-0.12 Machine F110-130
42-44		950-900	Lathe f0.1-0.13 Machine F105-135	Lathe f0.1-0.12 Machine F95-120
45-47		900-850	Lathe f0.1-0.13 Machine F100-120	Lathe f0.1-0.12 Machine F90-110
48-50		850-800	Lathe f0.1-0.13 Machine F90-110	Lathe f0.1-0.12 Machine F85-105
51-53		800-750	Lathe f0.1-0.13 Machine F80-100	Lathe f0.1-0.12 Machine F80-100
54-56		750-700	Lathe f0.1-0.13 Machine F75-95	Lathe f0.1-0.12 Machine F75-95
57-60		700-650	Lathe f0.1-0.13 Machine F70-90	Lathe f0.1-0.12 Machine F70-90
61-63		650-600	Lathe f0.1-0.13 Machine F65-85	Lathe f0.1-0.12 Machine F65-85
64-66		600-550	Lathe f0.1-0.13 Machine F60-80	Lathe f0.1-0.12 Machine F60-80
67-70		550-500	Lathe f0.1-0.13 Machine F55-75	Lathe f0.1-0.12 Machine F55-75

注意事項 / Operating Instructions

■使用快速鑽頭盡量由高壓中心出水，以增加刀片壽命及排屑良好。
■使用CNC車床時刀具中心點及機械主軸中心盡量平行。
■CNC車床使用如須擴孔，刀片外刃必須和刀塔移動角度平行。
■隨時注意刀片磨損狀況，如有异聲立即停止檢查。

■Use the High speed Drill the best to drain water from the high pressure center to extending inserts life, and good for removing the metal chips .
■Using CNC Lathe the cutting center point with spindle center of Machine best to be parallel.
■If you need to expend hole when using CNC Lathe , the outer insert must parallel with the remove angle of cutter tower .
■The inserts have to be checked regularly for wear , and stop immediately once noise occurred.

HSK Tool Holder Specification - DIN69893
HSK柄詳細圖

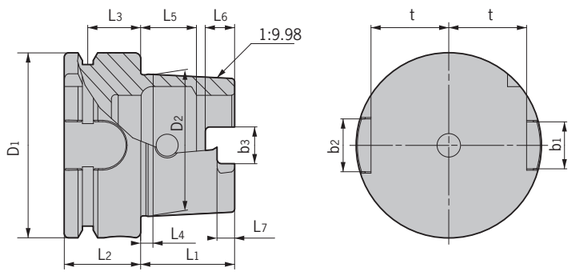

型號 Specification	D1	D2	L1	L2	L3	L4	L5	L6	L7	b1	b2	b3	t
HSK40A	40	30.007	20	20	16	4	11.42	6	3.5	11	9	8.05	17
HSK50A	50	38.009	25	26	18	5	14.13	7.5	4.5	14	12	10.54	21
HSK63A	63	48.010	32	26	18	6.3	18.13	10	6	18	16	12.5	26.5
HSK100A	100	75.013	50	29	20	10	28.56	15	10	22	20	20	44

BT Tool Holder Specification - JIS MAS403
BT柄詳細圖

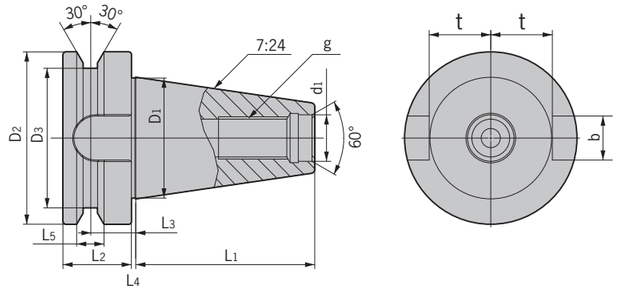

型號 Specification	D1	d1	L1	D2	D3	L2	L3	L4	L5	b	t	g
BT30	31.75	12.5	48.4	46	38	20	13.6	2	8	16.1	16.3	M12
BT40	44.45	17	65.4	63	53	25	16.6	2	10	16.1	22.6	M16
BT50	69.85	25	101.8	100	85	35	23.2	3	15	25.7	35.4	M24

SK Tool Holder Specification - DIN69871
SK柄詳細圖

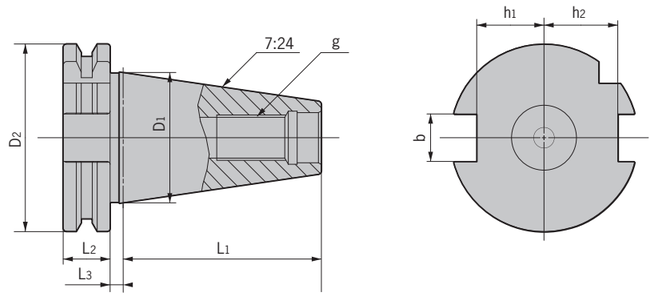

型號 Specification	D1	D2	L1	L2	L3	b	h1	h2	g
SK30	31.75	50	47.8	15.9	3.2	16.1	16.4	19	M12
SK40	44.45	63.55	68.4	15.9	3.2	16.1	22.8	25	M16
SK50	69.85	97.50	101.75	15.9	3.2	25.7	35.5	37.7	M24

螺絲安裝刀片說明

1.在刀片安裝時，必須用螺絲防卡劑按常規塗到刀具本體螺孔的螺紋上。

2.在扭緊螺絲之前，應以手指壓住後端以確保刀片的下表面和墊片相靠合。

3.刀片决不能靠緊固螺絲將它拖到位置上，這樣會使它提升到錯誤的位置并使擰緊失效。

4.在擰緊螺絲時，建議采用我們的扳手或扭矩扳手以使螺絲不被擰壞并確保安裝正確。

5.上述安裝方法適用于所有用中心螺絲固定刀片的刀具上。

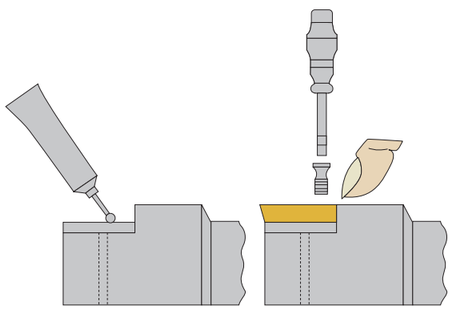

Installation Instructions Of Screw And Insert

1.Before assembling inserts, please oil the sciew hole of tool holder with lubrication oil or grease.

2.Before fastening, make sure the connection between the insert and shim is good.

3.Don't fit insert with screw only, or the insert will be misplaced, which will result in a bad fastening.

4.Suitable wrench is suggested.

5.The aforementioned assembling method is suitable for all the cutting tools with insert and screw.

注意事項/CAUTIONS

安裝刀具，拆卸刀具時注意事項
Assembling / Disassembling Of Tooling

❶ 請將刀柄牢固的固定在卸刀夾具上，然後再進行刀具的安裝與拆卸操作。
A locking device for tool holders is required.

❷ 在安裝刀具時請勿將手直接與刀刃接觸，防止將手劃傷。
No touch the cutting edge.

❸ 爲了保證刀具的安全安裝，請務必使用我公司提供的緊固扳手。
Suitable wrench is required.

❹ 在將刀具安裝上機床上時，請務必確認刀具上所有的緊固件已被鎖緊。
Fasten the tool holder properly before being used on machine.

加工時注意事項
Processing

❶ 請勿接觸旋轉中的刀柄或刀具。
No touch tools under working.

❷ 加工時請穿戴防護服與目鏡，防止飛濺的高温切屑的傷害。
Wear protective clothing and safety glasses.

❸ 加工時爲了防止意外事故的發生，在刀具旋轉時請勿打開機床的防護門。
The protection door of machines shall be closed when it is under working.

刀具長期保養注意事項
Maintenance

❶ 刀具長期不使用時，請將刀具從刀柄上拆卸下來，否則會導致刀柄的夾持力和夾持精度的下降及聯接面的銹蝕。
Please remove the cutting tools from tool holder when it is not used for a long time, or the clamping force and precision of the tool holder will be declined and the connecting surface will be rusted.

❷ 保存前請將刀具，刀柄上的切屑切削液清理幹净，并進行適當的防銹處理，如塗覆防銹油等。
Please clean cutting tools and tool holders before storing, and also perform rust-proof treatment properly.

技術資料 TECHNICAL DAT
DEREK